The Timken Company
4500 Mt Pleasant St. NW
N. Canton, OH 44720
Phone: (234) 262-3000
E-Mail: CustomerCAD@timken.com • **Web site:** www.timken.com

Timken Part Number SK-11022, Push-Type Removable Sleeve, Locknut and Lockwasher

The chart below shows dimensions for adapter assemblies and components used in the tapered bore bearings on shafts.

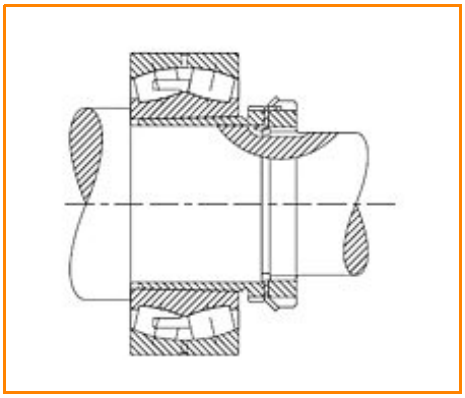

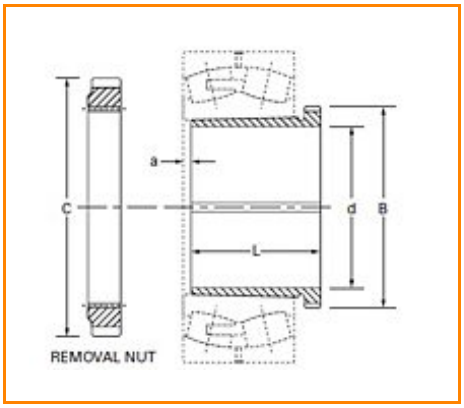

Specifications | Shaft Dimensions | Adapter Dimensions | Accessory Numbers

Specifications

Series	222K
Removal Nut O.D. C	158.75 mm 6.250 in
Bearing Number	22222K
Sleeve Weight	2.4 lb 1.1 Kg

Shaft Dimensions

Diameter d	100 mm 3.9370 in
Tolerance[1]	-0.10 mm -0.004 in

Adapter Dimensions

Pitch Diameter B	119.94 mm 4.722 in
L[2]	65.00 mm 2.5590 in
a	4.00 mm 0.157 in

Accessory Numbers

Sleeve	SK-11022
Locknut	AN-20
Lockwasher and Lockplates	W-20
Removal Nut	ARN-22

[1] Tolerance range is from +0 to value listed.
[2] Tolerance -0 to + 0.4 mm (-0 to +1/64 in)