

DODGE

BEARING ENGINEERING CATALOG

- Mounted Roller Bearings
- Sleevoil Hydrodynamic Bearings
- Plain Bearings
- Journal Bearings
- Take-Up Frames

To receive a copy of the Dodge® Bearing Engineering Catalog, Dodge Gearing Engineering Catalog, Dodge Power Transmission Components Engineering Catalog, or Dodge Product Manuals, contact your local authorized Dodge Distributor or www.dodgeindustrial.com.

MEMBER OF...

AMERICAN GEAR MANUFACTURERS ASSOCIATION

MECHANICAL POWER TRANSMISSION ASSOCIATION

AMERICAN BEARING MANUFACTURERS ASSOCIATION

PARTICIPATING MANUFACTURER
BEARING SPECIALISTS ASSOCIATION

POWER TRANSMISSION DISTRIBUTORS ASSOCIATION

CONVEYOR MANUFACTURERS ASSOCIATION

HYDRAULIC INSTITUTE

Dodge Products are Manufactured in ISO 9002 Certified Plants

Prices and data indicated in this document are for your convenience and were correct at time of printing with the exception of clerical and/or printing errors. Possession of this document by any person or company is not to be construed as an offer to sell to him or to anyone else the goods listed herein at the prices stated.

ALL DATA AND PRICES ARE SUBJECT TO CHANGE WITHOUT NOTICE and shall be subject to those prices in effect at time of shipments. All published and quoted prices are based upon the application of, and all sales are expressly subject to, the Company's Standard Terms and Conditions of Sales are available upon request. This document supersedes all previously published catalog/pricing documents.

WARNING

The information provided for Product Interchange in this catalog is for use only as a general reference by persons qualified to recognize unreasonable selection options. Products suggested as substitutes may have dimensional, rating, pricing and other differences from products to be replaced. This selection method must be used in conjunction with the applicable product catalog which contains important precautions and other pertinent information.

In illustrations throughout this catalog, safety guards have been removed for photographic purposes.

WARNING: Because of the possible danger to person(s) or property from accidents which may result from the improper use of products, it is important that correct procedures be followed: Products must be used in accordance with the engineering information specified in the catalog. Proper installation, maintenance and operation procedures must be observed. The instructions in the instruction manuals must be followed. Inspections should be made as necessary to assure safe operation under prevailing conditions. Proper guards and other suitable safety devices or procedures as may be described or as may be specified in safety codes should be provided, and are neither provided by Doge nor are the responsibility of Dodge Industrial. This unit and its associated equipment must be installed, adjusted and maintained by qualified personnel who are familiar with the construction and operation of all equipment in the system and the potential hazards involved. When risk to persons or property may be involved, a holding device must be an integral part of the driven equipment beyond the speed reducer output shaft.

CONTENTS

DODGE BEARING CATALOG

CA3000A VOL. A

REFERENCE GUIDE. . . . . REFERENCE GUIDE-1
ULTRA KLEEN B1-1
E-Z KLEEN B2-1
EXTREME DUTY. B3-1
SETSCREW - SC/SCM B4-1
GRIP TIGHT - GT/GTM B5-1
D-LOK - DL/DLM B6-1
ECCENTRIC COLLAR - SXR B7-1
SETSCREW VSC B8-1
ECCENTRIC COLLAR - SXV B9-1
TAKE-UP FRAMES B19-1
ENGINEERING B20-1
Part Number Index INDEX-1
Key Word Index KEYWORD-1

CA3000B VOL. B

REFERENCE GUIDE. . . . . REFERENCE GUIDE-1
E-FAMILY B10-1
SPECIALITY TAPERED. B11-1
S-2000 . . . . . B12-1
UNISPHERE B13-1
IMPERIAL B14-1
UNIFIED SAF B15-1
PLUMMER BLOCKS B16-1
SLEEVE BEARINGS B17-1
SLEEVOIL. B18-1
TAKE-UP FRAMES B19-1
ENGINEERING B20-1
Part Number Index INDEX-1
Key Word Index KEYWORD-1

REFERENCE GUIDE

ULTRA KLEEN - SS Inserts Ball Bearings
Page B1-1



- 440C Stainless steel inserts
- Polymer and stainless housings
- 65° Setscrew
- 3/4" - 2" Bore
- 20-50mm Metric bore
- QuadGuard Seal
- Stainless Balls
- Maxlife Cage
- Snap-in style end covers available from stock
- Nomenclature: P2B-SCEZ-100-PSS
  - PSS = Polymer Housing, Stainless Insert
  - SHSS = Stainless Housing, Stainless insert

E-Z KLEEN Ball Bearings
Page B2-1



- Two types: polymer housed units and stainless steel housed units
- Two inserts: corrosion resistant (comparable to 440 stainless steel) and standard steel insert with flingers
- Three locking styles: 65° setscrew angle (SC), concentric clamp collar (GT), and thin wall adapter (GT)
- QuadGuard seal
- Snap-in style end covers available from stock
- Maxlife cage
- Optional—BEV modification for the beverage industry
- Interchangeable mounting dimensions with most competitive products
- Anti-rotation device prevents insert rotation associated with light or rotating loads/high-speed applications
- Plus or minus 2° static misalignment

Polymer-Housed Polymer Sleeve Bearings
Page B2-1



- Polymer housing contains additive that prevents bacterial and fungal growth
- All polymer and stainless steel construction
- Solid polymer housing has no cavities and no fillings
- Conforms to FDA /USDA specifications
- Polymer sleeve insert with stainless steel anti-rotation pin
- No lubrication required, self-lubricated polymer sleeve insert for maintenance-free operation
- Offered in a wide variety of housing configurations and all popular bore sizes
- Operates in temperatures from -40°F to 180°F
- 3/4 - 1-15/16 size

Extreme Duty / SCED SCMED Ball Bearings
Page B3-1



- Synthetic grease / Mobilith SHC 220 PM
- QuadGuard seal
- Maxlife cage
- Snap-in style end covers available from stock
- 65° Setscrew
- Other shaft attachment methods are available upon request
- Wide inner ring design
- Anti-Rotation Pin to prevent insert from spinning in housing
- Grade 10 balls
- Bore Range
  - SC-3/4" to 2-15/16 " 20mm to 75mm
  - SCM-1" to 3-1/2", 25mm to 85mm

REFERENCE GUIDE

Setscrew Ball Bearings
Page B4-1



- Two types: normal duty SC, medium duty SCM
- DualGuard seal - comprised of single lip seal and rubberized flinger - standard on all SC/SCM ball bearings. LL Lo Torque Labyrinth seals optional.
- Snap in end covers available from stock for most popular cast housings.
- Interchangeable mounting dimensions with most competitive products
- 65° setscrew angle for greater holding power and ease of installation in confined areas
- Anti-rotation device on SC and SCM bearings prevents insert rotation associated with light or rotating loads/ high-speed applications
- Expansion and non-expansion pillow blocks available for popular SC shaft sizes
- High-temperature option available to 400°F on SC and SCM
- Plus or minus 2° static misalignment

GRIP TIGHT Ball Bearings
Page B5-1



- Two types: normal duty GT and medium duty GTM
- DualGuard seal - comprised of single lip seal and rubberized flinger - standard on all GT/GTM ball bearings. LL Lo Torque Labyrinth seals optional
- Snap in end covers available from stock for most popular cast housings
- Interchangeable mounting dimensions with most competitive setscrew, eccentric clamp collar products
- Thin Wall Adapter mounting offers 360° full shaft contact and concentricity. No shaft marring or fretting corrosion like setscrew and eccentric collar products. Integral dismount feature easily removes the bearing from the shaft. Turned, ground, and polished shafting is not required.
- Anti-rotation device prevents insert rotation associated with heavy loads, vibration, unbalanced loads, and high-speed applications
- Expansion pillow blocks available for popular shaft sizes
- High-temperature option available to 400°F
- Plus or minus 2° static misalignment

D-LOK Ball Bearings
Page B6-1



- Two types: normal duty DL and medium duty DLM
- DualGuard seal - comprised of single lip seal and rubberized flinger - standard on all DL/DLM ball bearings. LL Lo Torque Labyrinth seals optional
- Snap in end covers available from stock for most popular cast housings
- Interchangeable mounting dimensions with most competitive products
- Concentric clamp collar locks the bearing to the shaft by tightening a single Allen wrench cap screw. The bearing will not mar the shaft like setscrew and eccentric collar bearings, providing concentricity between the bearing and shaft
- Anti-rotation device prevents insert rotation associated with light or rotating loads/high-speed applications
- Expansion and non-expansion pillow blocks available for popular shaft sizes
- High-temperature option available to 400°F
- Plus or minus 2° static misalignment

Eccentric Collar Ball Bearings
Page B7-1



- Two types: normal duty SXR and SLX
- DualGuard seal - comprised of single lip seal and rubberized flinger - standard on all SXR ball bearings. LL Lo Torque Labyrinth seals optional
- Snap in end covers available from stock for most popular cast housings
- Interchangeable mounting dimensions with most competitive products
- Eccentric collar locks the bearing to the shaft by a quarter turn of the collar in direction of shaft rotation. Collar is secured in place with setscrew
- Anti-rotation device on SXR prevents insert rotation associated with light or rotating loads/high-speed applications
- Expansion and non-expansion pillow blocks available for popular SXR shaft sizes
- High-temperature option available to 400°F on SXR
- Plus or minus 2° static misalignment

Setscrew VSC, SL Ball Bearings
Page B8-1



- Intermediate duty
- Wide inner ring
- 65° setscrew
- ProGuard lip seal
- Plus or minus 2° static misalignment

REFERENCE GUIDE

Eccentric SXV Collar, SLX Ball Bearings
Page B9-1



- Intermediate duty
- Wide inner ring
- ProGuard lip seal
- Eccentric locking collar
- Plus or minus 2° static misalignment

Air Handling Ball Bearings
Page B5-12, B4-16, B6-12



- Thin wall adapter: normal duty GTAH and medium duty GTMAH
- Setscrew: normal duty (SCAH) and medium duty (SCMAH)
  Concentric clamp collar: normal duty (DLAH) and medium duty (DLMAH)
- Single-lip contact seal (standard on SCAH and SCMAH), single-lip contact seal with flingers (optional on SCAH and SCMAH, standard on DLAH, DLMAH and GTAH, GTMAH), low-torque labyrinth seal (optional), end covers available from stock
- Interchangeable mounting dimensions with most competitive products
- Anti-rotation device prevents insert rotation associated with light or rotating loads/high-speed applications
- Plus or minus 2° static misalignment
- Expansion and non-expansion pillow blocks available for popular shaft sizes
- High-temperature option available to 400°F

Type E Tapered Roller Bearings (E-XTRA)
Page B10-3



- Tapered rolling elements
- Completely assembled, factory adjusted, and properly lubricated—shaft ready
- XTS triple lip seal
- Extra protection—E-TECT™ seal option
- Comparable mounting dimensions with ball bearings
- E-XTRA allows easy upgrade from ball bearings

Type EXL Tapered Roller Bearings
Page B10-4



- XTS Triple-Lip Seal
- Up to ± 4° of misalignment capability
- Totally Sealed Inner Unit
- High Strength Ductile Iron Housings
- Available in Expansion and Non-Expansion Housings

Double-Interlock Tapered Roller Bearings
Page B10-5



- Tapered roller bearing durability in a variety of styles
- XTS triple lip seal
- Extra protection E-TECT seal option
- Special clearances and greases available
- Self aligning
- Factory assembled, adjusted, and lubricated—shaft ready
- Sealed bearing

Type K Tapered Roller Bearings
Page B10-5



- Tapered roller bearing with reduced length through bore
- Single collar design saves space and installation time
- Allows bearing to be closer to the load for reduced shaft design
- Self aligning
- Factory assembled, adjusted, and lubricated—shaft ready
- Same housing as double-interlock
- XTS triple lip seal
- Extra protection - E-TECT™ Seal Option

TAF Tapered Roller Bearings
Page B10-6



- Tapered bearing is a cost-saving alternative to SAF spherical bearings
- Shaft ready—mounts six times faster than SAF
- Interchangeable with SAF style pillow blocks
- Self aligning, factory assembled, adjusted, and lubricated
- XTS triple lip seal
- E-TECT seal option available up to 5”
- Optional sensors for speed, vibration, and temperature
- Up to 5° static misalignment

Type C Specialty Tapered Bearings
Page B11-5

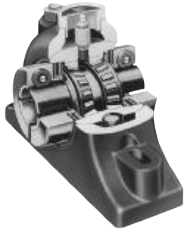

- Two single-row tapered bearings press-fitted on sleeve
- Improved concentricity over other collar-mounted types of bearings
- Steel multiple labyrinth seals
- Rugged two-piece outer housing
- Positive concentric clamp sleeve mounting
- Heavy duty gray iron

REFERENCE GUIDE

Special Duty Tapered Roller Bearings
Page B11-3



- Quality duplex tapered roller bearing
- Tapered adapter sleeve mounting
- Effective piston ring seals
- Rugged two-piece housing
- Heavy duty gray iron

S-2000 Spherical Roller Bearings
Page B12-1



- High-capacity, double-row spherical rollers
- Permits static or dynamic misalignment up to +/- 1°
- Factory sealed, lubed, and adjusted
- Features springlok® collar that acts as a flinger
- Available with TRIDENT triple lip or labyrinth seal options
- 65° springlok collar mount for increased holding power vs. 90° or 120°
- Setscrew mounted
- S2000, S2000-E, and S2000-HD housing designs

UNISPHERE II Spherical Roller Bearings
Page B13-1



- Dimensionally interchangeable with ball bearings in length through bore, base-to-center height, and footprint
- Approximately five times the rating of ball bearings
- Features same rolling elements and installation-ready components as S-2000
- Maintains sealing effectiveness with proven “R” seal
- Tapered seal area maintains seal contact during maximum misalignment
- Springlok collar mount with 65° setscrew spacing for optimum clamping force

Imperial IP Spherical Roller Bearings
Page B14-1

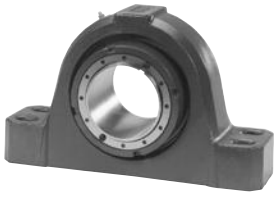

- Industry’s only push/pull adapter mount system
- Available in 2-bolt and 4-bolt pillow blocks, flanges, and take-ups
- Accepts commercial tolerance shafting
- Installation and removal in less than 15 minutes
- Full concentric shaft attachment with adaptor sleeve mount
- Virtually eliminates fretting corrosion
- Capable of withstanding static or dynamic misalignment of ± 1°
- Shaft-ready out of the box
- Available with TRIDENT triple lip or labyrinth seal options
- IP, IP-E, IP-HD and ISN housing design

ISAF Spherical Roller Bearings
Page B14-10



- Dimensionally interchangeable with SAF style pillow blocks
- Patented Imperial™ adapter mounting system
- Installation and removal in less than 15 minutes
- Easy installation—no feeler gauges needed
- Available with TRIDENT triple lip or labyrinth seal options
- Full 2° misalignment capability
- Virtually eliminates fretting corrosion
- Shaft-ready out of the box, no assembly of components necessary

ISAF HYD Spherical Roller Bearings
Page B14-10

- Patented integral hydraulic mounting and dismounting
- Built in taconite style seals in addition to conventional rubbing seals
- Four-bolt pillow blocks 5-7/16” through 15”
- 22232K through 23176K double row spherical bearings
- Ductile iron housings

ISNX metric dimensioned housing also available



REFERENCE GUIDE

ISN Spherical Roller Bearings
Page B14-1



- Patented ISN “Push/Pull” adapter mounting system
- Eliminates need for feeler gauges
- Easy removal
- Expansion & non-expansion, field convertible
- Triple lip contact seals for wet or dirty applications
- Labyrinth non-contact seals for high speed & high temperature applications

ISNX HYD Spherical Roller Bearings
Page B16-20

- Patented integral hydraulic mounting and dismounting
- Built-in taconite style seals in addition to conventional rubbing seals
- Four-bolt plummer blocks for 150mm through 360mm
- 22134K through 23176k double row spherical bearings
- Ductile iron housings



USAF Spherical Roller Bearings
Page B15-3

- 22200, 22300, 23000, 23100, and 23200 Series
- Industry-standard dimensions interchangeable with SAF housings
- Five sealing options to match most operating conditions
- Cast-in dimples locate drill holes for lube fitting, vents, sensors, and mounting modifications
- Standard housings have two oversized drains adaptable for circulating oil systems
- Pry slots allow easy separation of the pillow block



Split-Spher Spherical Roller Bearings
Page B15-5



- Split-race spherical bearing fits USAF 500 housings and replaces bearing and adapter assemblies
- Easy to replace without removing other shaft-mounted components
- Only split-race bearing made to standard SAF pillow block dimensions
- Has same OD dimensions as a standard spherical bearing
- Uses 22200 Series split roller bearings

SNX Spherical Roller Bearings
Page B16-25



- Dimensionally interchangeable plummer block with metric SN housing
- General-purpose, high-capacity, double-row, spherical roller bearings
- Adapter and direct mount
- Five different sealing options to match most operating conditions
- Grease or oil lubrication
- SNX30 from 110mm through 170mm

SDX (cast iron), SDXD (ductile iron) Spherical Roller Bearings
Page B16-46

- Metric dimensioned plummer block housing
- Accepts 23000K and 23100K bearings
- Sized from 150mm through 320mm
- Direct seal greasing standard

REFERENCE GUIDE

SOLIDLUBE Sleeve Bearings
Page B17-2

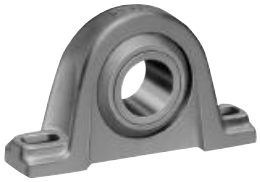

- Functions in harsh environments where ball bearing will not
- Self-lubricating, statically self aligning
- Covers a wide range of temperature extremes
  - 700 Series: -40°F to 700°F
  - 1000 Series: -200°F to -40°F and 250°F to 1000°F
- Housing types: 2-bolt pillow blocks, 4-bolt and 2-bolt flange units, and take-up units
- Ideal where bearings are subject to dry cycles or where lube systems would be too costly
- Recommended for slow speeds and limited shaft movement applications
- Bore sizes 3/4" to 8"

Babbitted & Bronze Bushed Sleeve Bearings
Page B17-3



- Good for slow to medium and shock loads
- Good for slow speeds and shock loads
- Capable of MPTA load ratings
- Cast-iron housings in 2- and 4-bolt pillow blocks
- Babbitted bearing features solid or fully split housing
- Bronze bushed bearing features fully split housing
- Bronze bushing is split and easily replaced

BRONZOIL Sleeve Bearings
Page B17-2



- Self Oiling Bushing Feeds Oil to Shaft
- Split Pressed Steel Housing
- Statically Self-Aligning
- Bushing Shoulder Provides Self-Lubricating Bearing Thrust Surface
- Slotted Bolt Holes
- Oil Resistant Rubber Grommets Available for Sound Isolation and Static Electricity Protection

SLEEVOIL R Series Hydrodynamic Pillow Block Bearings
Page B18-1



- Extended life (no metal-to-metal contact during operation)
- Handles high speeds
- Dampens vibration, provides quiet operation
- Fully split for ease of maintenance
- Self aligning
- Thrust capability
- External cooling (air, water, or oil) available for hot shafts

SLEEVOIL RTL Series Hydrodynamic Pillow Block Bearings
Page B18-1



- Extended life (no metal-to-metal contact during operation)
- Handles high speeds
- Dampens vibration, provides quiet operation
- Fully split for ease of maintenance
- Self aligning
- Three times the thrust load capability of R Series
- External cooling (air, water, or oil) available for hot shafts

SLEEVOIL Oil Level & Filtration System (OLF)
Page B18-30



- Maintains proper oil level while bearing is running
- Increases bearing performance and life
- Allows even oil distribution and cooler operating temperatures
- Ensures filtered clean oil
- Permits easy filter change while bearing is operating

Take-Up Frames
Page B19-1



- 6 take-up frame types available from stock
- Standard take-up frame travel from 1-1/2” to 60”
- Take-up frames allow for the mounting of Dodge ball, roller, and sleeve bearings
- Take-up frame capacity is pre-engineered to exceed bearing capacity
- Made to provide/maintain tension and shaft centers on a variety of belt and chain-type conveyors
- Hydraulic and pneumatic tensioning available

Smart Products
Page B10-67, B14-103, B15-54



- Online monitoring of temperature, vibration, and speed
- Plug and play installation
- Available on TAF, USAF, and ISAF

BALL BEARING INDEX

DODGE

		HOUSING					
		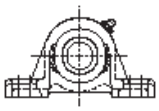 P2B-	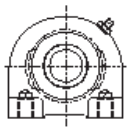 TB-	 F2B-	 LFT-	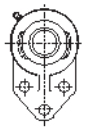 FB-	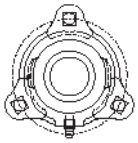 LF- / F3B-
INSERTS	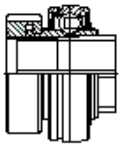 GT- / GTEZ- / GTM-	P2B-GT-B5-8 P2B-GTEZ -PCR-B2-44 -SHCR-B2-26 P2B-GTM-B5-20	TB-GT-B5-24 TB-GTEZ -PCR-B2-50	F2B-GT-B5-24 F2B-GTEZ -PCR-B2-54 -SHCR-B2-30 F2B-GTM-B5-30		FB-GT-B5-33 FB-GTEZ -PCR-B2-58	
	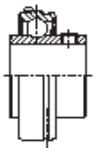 SC- / SCM- / SL-	P2B-SC-B4-12 P2B-SCRZ -PCR-B2-46 -SHCR-B2-26 P2B-SCM-B4-26 P2B-SL-B4-30	TB-SC-B4-32 TB-SCEZ-B2-29	F2B-SC-B4-34 F2B-SCEZ -PCR-B2-56 -SHCR-B2-31 F2B-SCM-B4-42 F2B-SL-B4-48	LFT-SC-B4-46 LFT-SCEZ-B2-33	FB-SC-B4-50 FB-SCRZ -PCR-B2-59 -SHCR-B2-34	LF-SC-B4-52 LF-SCEZ-B2-33 F3B-SL-B4-53
	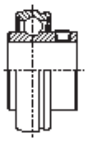 VSC-	P2B-VSC-B8-8		F2B-VSC-B8-14			
	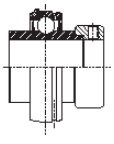 SXR-	P2B-SXR-B7-12	TB-SXR-B7-22	F2B-SXR-B7-24			
	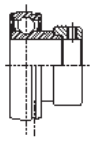 SXV-	P2B-SXV-B4-6	TB-SXV-B9-12	F2B-SXV-B9-16	LFT-SXV-B9-18		LF-SXV-B9-22
	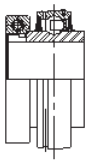 DL- / DLEZ- / DLM-	P2B-DL-B6-10 P2B-DLEZ -PCR-B2-48 -SHCR-B2-28 P2B-DLM-B6-18	TB-DL-B6-22 TB-DLEZ-PCR-B2-52	F2B-DL-B6-26 F2B-DLEZ -PCR-B2-57 -SHCR-B2-32 F2B-DLM-B6-30	LFT-DL-B6-31	FB-DL-B6-33 FB-DLEZ-B2-60	LF-DL-B6-32

Not Recommended

Made to Order / Modification Required

BALL BEARING INDEX

DODGE

		HOUSING					
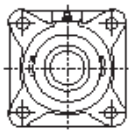 F4B-	 FC-	 NSTU- / WSTU- / TP-	 HNG-	 SCHB-	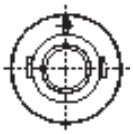 CYL-		
F4B-GT-B5-35 F4B-GTEZ -PCR-B2-62 -SHCR-B2-35 F4B-GTM-B5-42	FC-GT-B5-46 FC-GTM-B5-48	NSTU-GT/GTM -B5-50 & 52 WSTU-GT/GTM- B5-54&58 WSTU-GTEZ -PCR-B2-66 TP-GT/GTM-B5-60&61				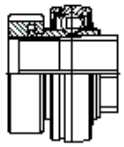 GT- / GTEZ- / GTM-	I N S E R T S
F4B-SC-B4-54 F4B-SCEZ -PCR-B2-64 -SHCR-B2-36 F4B-SCM-B4-60 F4B-SL-B4-64	FC-SC-B4-66 FC-SCM-B4-68	NSTU-SC-B4-70 NTSU-SCM-B4-73 TP-G-B4-82 NSTU-SCEZ-B2-38 WSTU-SCEZ -PCR-B2-68 WSTU-SCM-B4-78 WSTU-SC-B4-74	HNG-SC-B4-86	SCHB-SC-B4-84	CYL-SC-B4-87	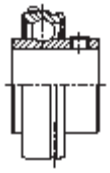 SC- / SCM- / SL-	
F4B-VSC-B8-16		WSTU-VSC-B8-20 NSTU-VSC-B8-18				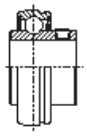 VSC-	
F4B-SXR-B7-28	FC-SXR-B7-30	WSTU-SXR-B7-34 NSTU-SXR-B7-32 TP-GXR-B7-36	HNG-SXR-B7-37	SCHB-SXR-B7-38	CYL-SXR-B7-39	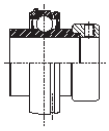 SXR-	
F4B-SXR-B9-24 F4B-SLX-B9-26	FC-SXV-B9-28	NSTU-SXV-B9-30 WSTU-SXV-B9-32				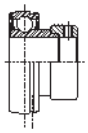 SXV-	
F4B-DL-B6-34 F4B-DLEZ -PCR-B2-65 -SHCR-B2-37 F4B-DLM-B6-36	FC-DL-B6-38 FC-DLM-B6-40	NSTU-DL-B6-42 NSTU-DLM-B6-44 WTSU-DLEZ -PCR-B2-70 WSTU-DL-B6-46 WSTU-DLM-B6-48 TP-DL-B6-50 TP-DLM-B6-51		SCHB-DL-B6-52	CYL-DL-B6-53	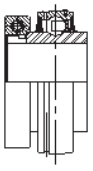 DL- / DLEZ- / DLM-	

Not Recommended

Made to Order / Modification Required

BALL BEARING INDEX

CONTENTS

Type E-Xtra/DOUBLE-INTERLOCK®/Type K/TAF

Features / Benefits
- Type E-Xtra . . . B10-2
- Type EXL, Pillow Block Inner Unit . . . B10-4
- DOUBLE-INTERLOCK & Type K . . . B10-5
- TAF . . . B10-6

Specifications . . . B10-8
How to Order . . . B10-9
Nomenclature . . . B10-10
Selection (Inch) . . . B10-11
Easy Selection Table - Inch . . . B10-15
Engineering/Technical . . . B10-17
Selection/Dimensions - Inch
- Type E-Xtra
  - Pillow Block . . . B10-22
  - Flanges . . . B10-26
  - Take-Ups . . . B10-30
- Type EXL
  - Pillow Block . . . B10-34
  - Inner Units . . . B10-38
- Type K
  - Pillow Block . . . B10-40
  - Flanges . . . B10-42
  - Inner Units . . . B10-44
  - Take-Ups . . . B10-46
- DOUBLE-INTERLOCK
  - Pillow Block . . . B10-50
  - Flanges . . . B10-54
  - Inner Units . . . B10-56
- TAF
  - Pillow Block . . . B10-58
  - Inner Units . . . B10-62

Modification/Accessories
- Type E-Xtra End Closures and E-TECT Seals . . . B10-64
- Type K, DOUBLE-INTERLOCK and TAF End Closures and E-TECT Seals . . . B10-65

Selection - TAF Smart Bearings . . . B10-67
Easy Selection - Type E-Xtra Metric . . . B10-68
Selection/Dimensions - Metric
- Type E-Xtra - Metric . . . B10-74
- DOUBLE-INTERLOCK - Metric . . . B10-76

Part Number Index . . . INDEX-1
Key Word Index . . . KEYWORD-1

FEATURES/BENEFITS

Type E-Xtra/DOUBLE-INTERLOCK/Type K/TAF/EXL

These five product lines have many common features and benefits that are shown on this page. Unique features for each product are shown on the following pages.

The common components used by all four lines include:

- Bearings
- Seals
- Locking collars
- Bore range

General Features:

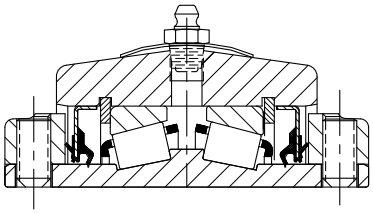

- Factory assembled, adjusted and prelubricated
- Case hardened rollers and races
- Easy installation and maintenance
- 65 degree set screw angle Springlok collar/ flingers - more holding power than 90 to 120 degree
- Triple rubber lip contacting seals

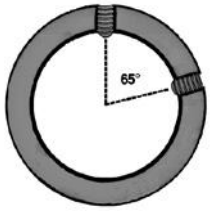

E-Xtra Tough Sealing

Importance of Sealing:

- 40% of mounted bearing failures in the industry involve liquid or solid contamination or lack of adequate lubrication
- Obstructs contaminant entry
- Retains essential lubrication
- Increased life equals decreased downtime

XTS Sealing System

Standard on all Dodge Type E-Xtra, EXL, TAF, Double Interlock and Type K Bearings

1. Collar-riding seal lip provides the first level of defense against contaminants
2. Trash guard protects inner seals
3. Primary contact seal protects internal components and helps retain grease
4. Contact seal for grease retention and secondary trash guard for increased protection
5. Optional E-Tect seal kit for harsh-duty environments

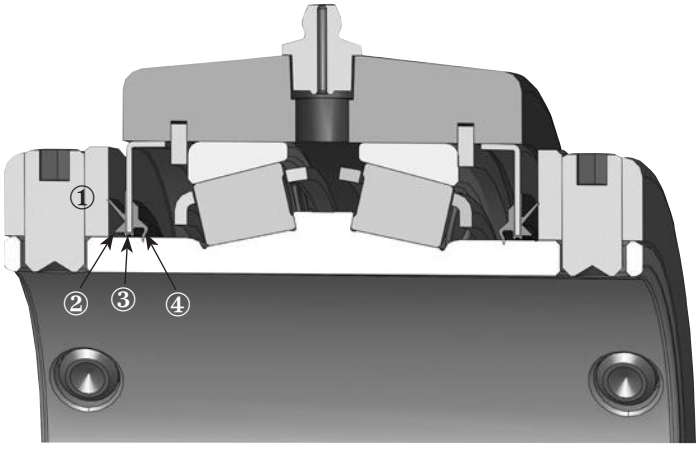

XTS Sealing

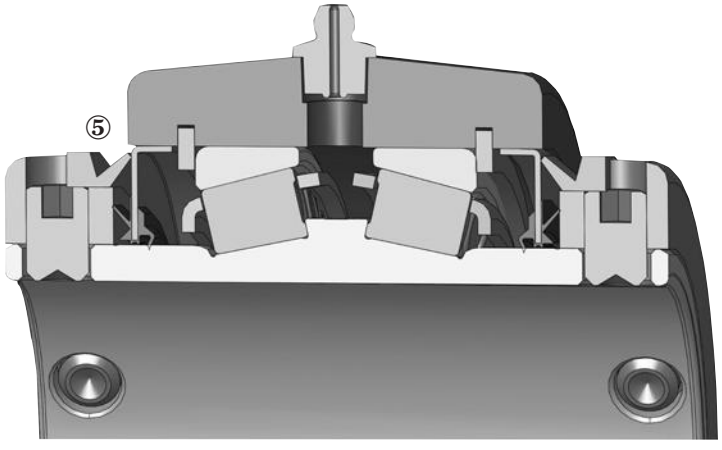

XTS Sealing with E-Tect Option

NOTE: Instruction manuals for Dodge bearings are available on www.dodge-pt.com

FEATURES/BENEFITS



Type E-Xtra

DODGE Type E
One Bearing, One Seal
For Dusty or Damp Environments



- **“E” stands for economy**
- Type E allows easy upgrade from ball bearings
- Comparable mounting dimensions with ball bearings
- Moderate price premium vs. ball bearings
- Steel housed pillow blocks available in selected sizes

The Original DODGE Type E Bearing, Only Better

- New Dodge manufactured bearings increase load ratings 13-14% depending on size
- New “XTS” seal provides added protection against contamination
- Completely assembled, factory adjusted and properly lubricated - shaft ready
- Stocked in all configurations
- Extra protection - E-TECT seal option
- Steel end covers available up to 3”, 75mm



Top Angle Take-Ups
1-3/4 to 4”
45 - 100mm



Center Pull Frame With
Wide Slot Take-UP
1-3/8 to 3”
35 - 75mm



Pillow Block
1-3/16 to 7”
35 - 180mm



Piloted Flange
1-3/16 to 5”
35 - 125mm



Flange
1-3/16 to 4-1/2”
35 - 115mm

FEATURES/BENEFITS

Type EXL for Extended Life

The Dodge Type EXL offers misalignment and expansion capability by incorporating a totally sealed inner unit into a split housing design with standard Type E mounting dimensions.

Standard Features

- XTS Triple-Lip Seal
- Up to ± 4° of misalignment capability
- Totally Sealed Inner Unit
- High Strength Ductile Iron Housings
- Available in Expansion and Non-Expansion Housings

Product Offering

2-Bolt Pillow Blocks: 1-3/16" - 3-1/2"

4-Bolt Pillow Blocks: 2-1/4" - 5"

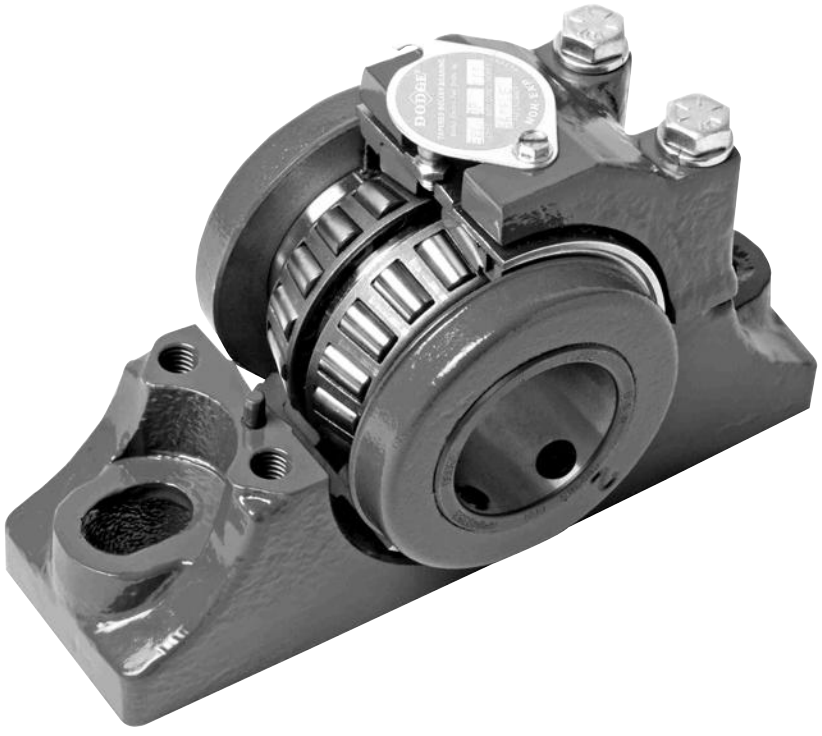

FEATURES/BENEFITS



Type K and DOUBLE-INTERLOCK

DODGE DOUBLE-INTERLOCK COMBINES DURABILITY WITH MOUNTING FLEXIBILITY

Heavy Duty Housing Construction Has Proven Performance

- Offers tapered roller bearing durability in a variety of mounting styles
- "XTS" triple lip seal standard
- Extra protection E-TECT Seal Option
- Special clearances and greases available
- Self aligning
- Factory assembled, adjusted and lubricated - **shaft ready**
- End covers available up to 5"





Pillow Block
1-3/16 to 7"



Flanges
1-3/16 to 5"



S-1 Unit



B-1 Unit
1-3/16 up to 5"



D Unit
1-3/16 up to 5"

DODGE TYPE K FITS WHERE COMPETITORS WON'T

Tapered Roller Bearings With Reduced Length Thru Bore

- Reduces length thru bore design in a variety of mounting styles
- Single collar design saves space and installation time
- Allows bearing to be closer to the load for reduced shaft design
- Self-aligning
- Factory assembled, adjusted and lubricated - shaft ready
- Same housing as DOUBLE-INTERLOCK
- End covers available up to 5"

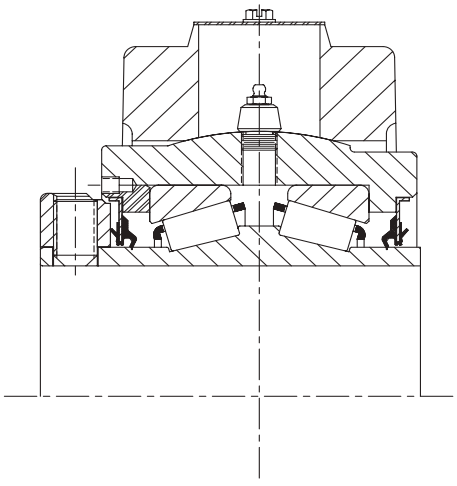

Flange Expansion and
Non-Expansion
1-3/16 - 3-15/16





S-1 & B-1 Units
1-3/16 - 3-15/16"



Pillow Block
Expansion & Non-Expansion
1-3/16 - 3-15/16"



Wide Slot Take-Up
Frame
1-3/8 - 3"





Top Angle Take-Ups
1-3/4 - 3-15/16"

FEATURES/BENEFITS

TAF

TAF IS A COST SAVING ALTERNATIVE TO SAF SPHERICAL BEARINGS

Mounts Fast, Stays Cleaner And Extends Service Life

- Shaft ready - mounts six times faster than SAF
- Interchangeable with SAF style pillow blocks
- Self-aligning, factory assembled, adjusted and lubricated
- Available in 1-7/16" up to 7" shaft diameters
- Equipped with expansion or non-expansion housing
- "XTS" seal standard
- E-TECT seal option available up to 7"
- Optional Smart Housings accommodate speed, vibration and temperature sensor kits

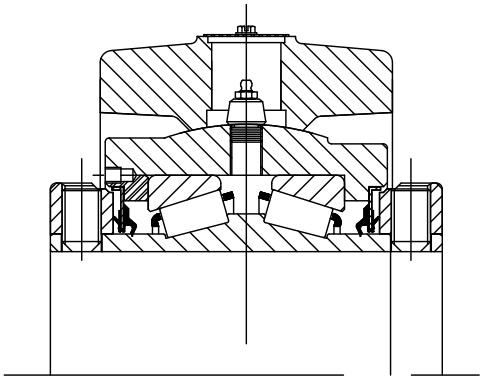

TAF
Self-aligning provided by spherically-machined housing

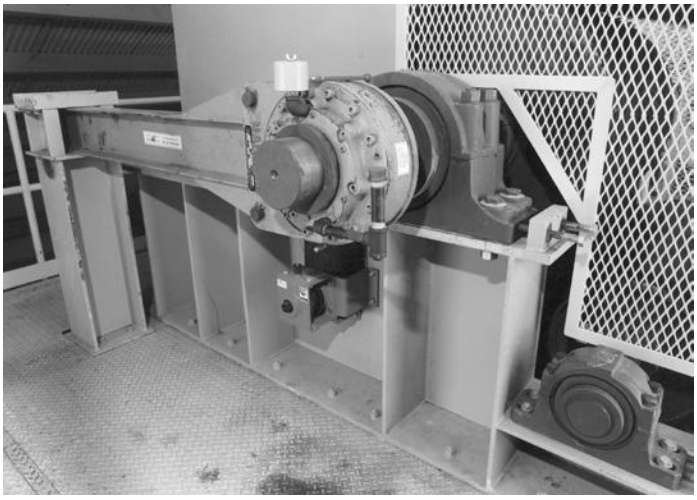

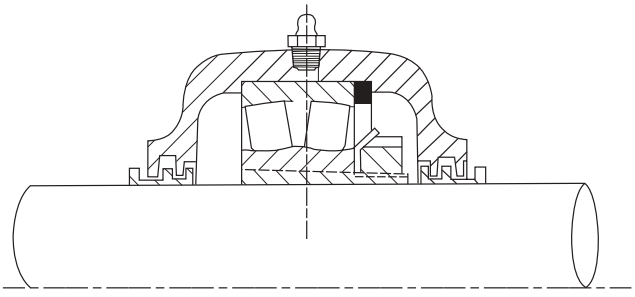

SAF
Self-aligning provided by insert, limited by seal interference

TAF Is Interchangeable With SAF Mounting Dimensions

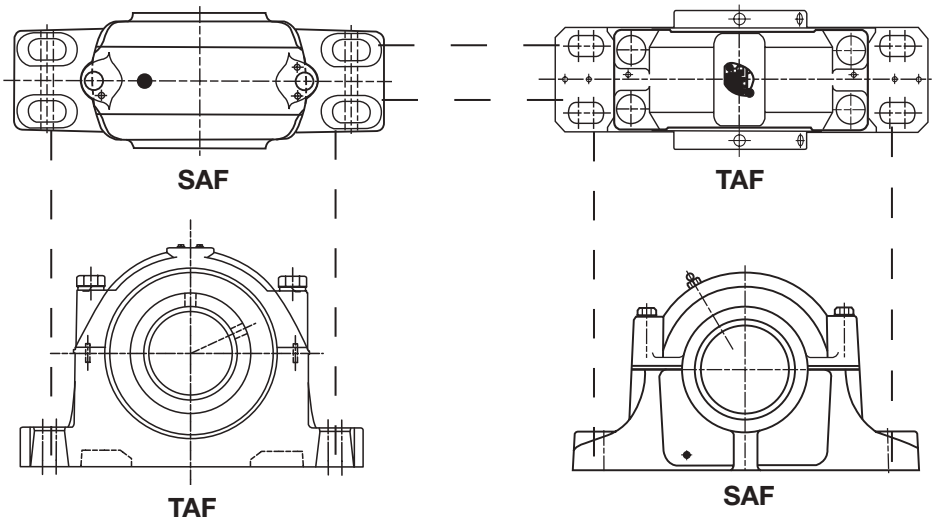



Type K/DOUBLE-INTERLOCK/TAF

DODGE BEARINGS SAVE YOU TIME AND MONEY

Compare These DODGE TAF, Type K & DOUBLE-INTERLOCK Bearing Advantages Against Standard SAF Pillow Blocks

Standard SAF
- Four pieces
- Up to six packages
- Open bearing
- Feeler gauge required
- Grease required

DODGE TAF, Type K and DOUBLE-INTERLOCK
- One piece
- Sealed bearing
- Factory adjusted
- Factory lubricated
- Shaft ready





Compare Standard SAF and DODGE Sealing Designs

Standard SAF
- Seals ride independently of bearing
- Less than 1° static misalignment
- Sealing effectiveness decreases as misalignment increases
- Seals distort when misalignment occurs



DODGE TAF, Type K and DOUBLE-INTERLOCK
- Inner unit carries seal
- Up to 5° static misalignment
- Seal and bearing ride together in inner unit
- Seals maintain contact on cones even with misalignment



NOTE: Instruction manuals for Dodge bearings are available on www.dodge-pt.com

SPECIFICATION

Type E-Xtra, Type K, DOUBLE-INTERLOCK/TAF and EXL

Type E-Xtra, Type K, DOUBLE-INTERLOCK, TAF and EXL mounted bearings are all general purpose high capacity tapered roller bearings capable of handling any combination of radial and thrust load within the capacity of the bearing.

All of these bearings are mounted to the shaft by means of set screw collars having 65 degree set screw spacing for optimum clamping force. The Type E-Xtra, DOUBLE-INTERLOCK, TAF and EXL mounted bearings have locking collars at each end of their extended inner races. Type K has a single locking collar. The tapered roller bearings for these mounted bearings all have case carburized inner races (cones), outer races (cups), and rollers.

Bearings are preassembled, prelubricated and factory adjusted. They are normally equipped with land riding contact type seals with a metal deflector guard.

The standard housing material for most of these mounted bearings is ASTM A48 Class 30 Iron having a minimum tensile strength of 30,000 psi. The outer housing for the Type K and DOUBLE-INTERLOCK flange bearings thru 4” bore size and all Type EXL housings utilize housings made of ductile iron (ASTM A536 Grade 65-45-12) with 65,000 psi tensile strength. Type E pillow blocks are also available with cast steel housing having a tensile strength of 70,000 psi for 2-bolt base thru 3-1/2” bore size and 4-bolt base from 3-15/16” thru 5” bore size on an assembled or order basis.

The Type K, DOUBLE-INTERLOCK pillow blocks and flange bearings plus the TAF pillow blocks all have split outer housings used with completely assembled, lubricated and adjusted inner units simplifying replacement of the bearing in the pillow block or flange bearing. All Type E mounted bearings, Type K take up units and all D units, S-1 units, and B-1 units have solid one piece housings.



FEATURES/BENEFITS PAGE B10-2	HOW TO ORDER/NOMENCLATURE PAGE B10-9	EASY SELECTION PAGE B10-15	ACCESSORIES PAGE B10-64



Type E-Xtra, Type K, DOUBLE-INTERLOCK/TAF and EXL

There are two ways to specify DODGE Bearings. Most of the product offering have part numbers with listings shown throughout this catalog. Use of part numbers ensures accurate order processing.

When part numbers are not shown, the product may be specified by description or part name. This method is used when ordering units that include modifications or options. To order by description, use the nomenclature key shown on page and add any special instructions to the end of the description for options not covered by the nomenclature.

SPECIAL BEARING REQUIREMENTS AND SPECIAL LUBRICANTS

DODGE Bearings are factory adjusted and pre-lubricated. For applications where extreme ambient temperatures, high speeds or high loads are expected, a variety of specialty lubricants and adjustments are available. Standard grease provided is Mobilgrease XHP222, a lithium complex based grease. High temperature greases available upon request. Special lubricant options usually involve set-up charges and premiums. To order, specify type of lubricant required at the end of the product name or after the standard part number.

Example:

F4B-E-207 except with Mobil Grease HTS #2 grease and .012 to .015 lateral end play

or

023106 except with Mobil Grease HTS #2 grease and .012 to .015 lateral end play

OTHER SPECIAL REQUIREMENTS NOT LISTED

For applications requiring modifications not listed, we encourage you to contact out Application Engineering Department for Bearings at 864-284-5700.

NOMENCLATURE



Type E-Xtra, Type K, DOUBLE-INTERLOCK, TAF and EXL

P2B - 515-TAF - 207 - RE

HOUSING STYLE OPTION

P2B = Pillow Block 2-Bolt, Cast Iron

P4B = Pillow Block 4-Bolt, Cast Iron

SP2B = Pillow Block 2-Bolt, Cast Steel

SP4B = Pillow Block 4-Bolt, Cast Steel

F4B = Flange Bearing 4-Bolt, Cast Iron

FC = Piloted Flange Bearing (Flanged Cartridge)

B1U = B1 Unit Cast Iron

DU = D Unit Cast Iron

S1U = S-1, Unit Cast Iron

WSTU = Wide Slot Take-Up Bearing Cast Iron

TP = Top Angle Take-Up Bearing Cast Iron

H2S = Pillow Block Housing Only 2-Bolt, Cast Iron

H4S = Pillow Block Housing 4-Bolt, Cast Iron

BEARING TYPE OPTIONS

E = Type E

EXL = Type EXL

K = Type K

DI = DOUBLE-INTERLOCK

TAF = TAF

5XX = Housing Series (TAF Only)

Size

Inches & 16TH
2 = 2 Inches
07 = 7/16 Inches
Or
207 = 2-7/16”

METRIC
060M = 60 Millimeters

OTHER OPTIONS

R = “XTS” Triple Lip Seal

E = Expansion Type Bearing.

Note: If E Does Not Appear After Seal Type, Then Bearing Is Non-Expansion Type



Type E-Xtra, Type K, DOUBLE-INTERLOCK,TAF and EXL Tapered Roller Bearings

DODGE Type E-Xtra, K, DI, TAF and EXL Double Row Tapered Roller Bearings have the capacity to carry heavy radial loads and combined radial and thrust loads. The maximum recommended load which can be applied is limited by various components in the system such as bearing, housing, shaft, shaft attachment, speed and life requirements as listed in this catalog. DODGE tapered roller bearings have been applied successfully even when these limits have been exceeded under controlled operating conditions. Contact DODGE Application Engineering (864) 284-5700 for applications which exceed the recommendations of this catalog.

L_{10} Hours Life --- The life which may be expected from at least 90% of a given group of bearings operating under identical conditions.

$$L_{10} = \left(\frac{C_{90}}{P}\right)^{10/3} X \frac{1{,}500{,}000}{RPM}$$

Where: C_{90} = Dynamic Capacity (Table 1, pg. B10-13), lbs.
P = Equivalent Radial Load, lbs.

GENERAL

Heavy Service --- For heavy shock loads, frequent shock loads, or severe vibrations, add up to 50% (according to severity of conditions) to the Equivalent Radial Load. Consult DODGE Application Engineering for additional selection assistance.

Thrust load values shown in the table below are recommended as a guide for general applications that will give adequate L_{10} life for pillow blocks. The maximum thrust load should not exceed values shown on Table 3. Where substantial radial load is also present, it is advisable to calculate actual L_{10} life to assure that it meets the requirements. The effectiveness of the shaft attachment to carry thrust load depends on proper tightening of the setscrews, shaft tolerance and shaft deflections. Therefore, it is advisable to use auxiliary thrust carrying devices such as shaft shoulder, snap ring or a thrust collar to locate the bearing under thrust loads heavier than shown below, or where extreme reliability is desired.

RPM Range		20-200	201 - 2000	Over 2000
Recommended Thrust Load	E, DI, TAF	$C_{90}/4$	$C_{90}/8$	$C_{90}/12$
	K	$C_{90}/5$	$C_{90}/8$	$C_{90}/12$

The shaft tolerances recommended below are adequate for normal radial and radial/thrust load applications. The radial load is limited by the attachment to the shaft (see Table 1). Where the applied radial load (F_R) exceeds this limit (maximum allowable slip fit radial load), a snug-to-light press fit of the shaft is required. Since the allowable load, especially at a low speed, is very large, the shaft should be checked to assure adequate shaft strength.

The magnitude and direction of both the thrust and radial load must be taken into account when selecting a housing. **When pillow blocks are utilized, heavy loads should be directed through the base. Where uplift loads are involved, see Tables 6, 7, and, pg. B10-19 for maximum values.** Where a load pulls the housing away from the mounting base, both the hold-down bolts and housing must be of adequate strength. Auxiliary load carrying devices such as shear bars are advisable for side or end loading of pillow blocks and radial load for flange units.

Shaft Size	Tolerance, Inches
UP TO 1-1/2"	+.0000 -.0005"
1-5/8 TO 4"	+.000 -.001"
4-7/16 TO 6"	+.000 -.0015"
6-7/16 - 8"	+.000 -.002"

NOTE: The L_{10} life calculated using the above formula is subject to life adjustment factors in accordance with ABMA standards described on page B16-9.

NOTE: Instruction manuals for Dodge bearings are available on www.dodge-pt.com

SELECTION



Type E-Xtra, Type K, DOUBLE-INTERLOCK, TAF and EXL Tapered Roller Bearings

SELECTING BEARINGS SUPPORTING RADIAL LOADS ONLY

1. Define L_{10} Life Hours desired.
2. Establish bearing radial load, F_R (F_R = P for Pure Radial Load Conditions). The DODGE program BEST™* can be used to find application loads.
3. Establish RPM.

Using the easy selection Table 3, pg B10-15 find, under the RPM column, the equivalent radial load that equals or is higher than the application radial load for the desired life. The shaft size on the far left will be the minimum shaft size that you can use for your application. If the desired life is different than the values shown on the chart, use alternate Method A shown below.

Example: 1. L_{10} Life = 30,000 Hours
2. Radial load = 4200 lbs.
3. RPM = 1,200

At the intersection of the 1,200 RPM column and the 30,000 hours L_{10} life row, the equivalent radial load of 4286 lbs. exceeds the 4200 lbs. radial load for shaft sizes 2-11/16 - 3". A bearing with bore ranging from
2-11/16" to 3" may be used for this application.

ALTERNATE METHOD A --- SELECTING A BEARING FOR AN L10 LIFE VALUE NOT SHOWN IN THE EASY SELECTION CHART.

The L_{10} life equation can be rearranged so that the bearing dynamic capacity $\mathbf{C_{90}}$ is identified in terms of L_{10}, RPM and P.

$$C_{90} = \left(\frac{L_{10} \times RPM}{1{,}500{,}000} \right)^{0.3} \times P$$

(P = F_R for Pure Radial Load Conditions)

Since the L_{10}, RPM, and P are known, solve for C_{90}. Select from the dynamic capacity column on Table 2, pg B10-14. The C_{90} value equal to or greater than the C_{90} value just calculated. The bore size on the far left represents the bore size selection. Check that the application RPM does not exceed the MAX. RPM on Table 2. Also check that the radial load does not exceed the Maximum Allowable Slip Fit Radial Load shown on Table 2. If it does, a line to line to light press fit of shaft is required. When selecting an L_{10} life of less than 30,000 hours, particular attention must be paid to shaft deflection and proper lubricant selection.

SELECTING BEARINGS SUPPORTING COMBINATION RADIAL AND THRUST LOADS

When a bearing supports both a radial load and a thrust load, the loading on the two rows is shared unequally depending on the ratio of thrust to radial load. The use of the X (radial factor) and Y (thrust factor) from Table 2 converts the applied thrust load and radial loads to an equivalent radial load having the same effect on the life of the bearing as a radial load of this magnitude.

The equivalent radial load $P = XF_R + YF_A$

Where: P= Equivalent radial load, lbs.
F_R= Radial load, lbs. (see Table 2 for allowable slip fit maximum)
F_A= Thrust (axial) load, lbs.
e = Thrust load to radial load factor (Table 2)
X = Radial load factor (Table 2)
Y= Thrust load factor (Table 2)

To find X and Y, calculate F_A/F_R and compare to **e** for the selected bore size. Determine X and Y from Table 2, pg. B10-14 depending on whether F_A/F_R is equal to or less than **e**, or F_A/F_R is greater than **e**. Substitute all known values into the equivalent radial load equation. P (equivalent radial load) can be used in the life formula to determine L_{10}, or it can be compared to the allowable equivalent radial load ratings for the speed and hours life desired in the easy selection Table 3, pg B10-15.

*The DODGE Bearing Evaluation and Selection Technique (BEST) is a menu driven computer program that calculates bearing loads, fatigue life and operating temperature for a two bearing shaft system based on user supplied input parameters. This interactive program is available at www.ptwizard.com under the Product Selection area.



Type E-Xtra, Type K, DOUBLE-INTERLOCK,TAF and EXL Tapered Roller Bearings

SELECTING BEARINGS SUPPORTING ONLY THRUST LOADS

Tapered Roller Bearings perform extremely well under pure thrust load applications. Use $P = YF_A$ for the equivalent radial load. The value of Y is obtained from Table 2, pg. B10-14 for $F_A/F_R > \mathbf{e}$. Substitute Y and F_A into the equivalent load equation. P (equivalent radial load) can be used in the life formula to determine L10 or it can be compared to the allowable equivalent radial load ratings for the speed and hours life desired in the easy selection Table 3, pg. B10-15.

LUBRICATION

DODGE E, K, DI, EXL, and TAF tapered roller bearings up to 5" bore are lubricated at the factory with Mobilgrease XHP222 grease. This grease will adequately handle low and medium speeds with low and medium loads at normal temperatures as defined on Table 6, pg. B10-18. For very low and high speeds, for heavy loads and for low and high temperatures, special greases must be used. Contact DODGE Application Engineering (864) 284-5700. DODGE engineers will recommend bearings and lubricants for the above unusual conditions. DODGE also has the expertise to custom design and build special bearings for your needs. The only maintenance requirement for DODGE Tapered Roller Bearings is periodic relubrication at regular intervals as outlined in the appropriate instruction manuals.

Relubrication Schedule

Hours Run per Day	Suggested Lubrication Period In Weeks							
	1 to 250 RPM	251 to 500 RPM	501 to 750 RPM	751 to 1000 RPM	1001 to 1500 RPM	1501 to 2000 RPM	2001 to 2500 RPM	2501 to 3000 RPM
8	12	12	10	7	5	4	3	2
16	12	7	5	4	2	2	2	1
24	10	5	3	2	1	1	1	1

High Speed Operation --- In the higher speed ranges too much grease will cause overheating. The amount of grease that the bearing will take for particular high speed application can only be determined by experience --- see "Operating Temperature" below. If excess grease in the bearing caused overheating, it will be necessary to remove grease fitting (also drain plug when furnished) to permit excess grease to escape. When establishing a relubrication schedule, note that a small amount of grease at frequent intervals is preferable to a large amount at infrequent intervals.

Operation in Presence of Dust, Water or Corrosive Vapors --- Under these conditions the bearing should contain as much grease as speed will permit, since a full bearing with consequent slight leakage is the best protection against entrance of foreign material. In the higher speed ranges too much grease will cause overheating --- see "High Speed Operation". In the lower speed ranges, it is advisable to add extra grease to a new bearing before putting into operation. Bearings should be greased as often as necessary (daily if required) to maintain a slight leakage at the seals.

INSTALLATION AND MAINTENANCE

In nearly all applications good design practice requires two bearings supporting the shaft. In cases where three or more bearings are installed, unless precautions are taken to line the bearings up, both vertically and horizontally, it is possible to induce heavy loads. In the case of two bearings, alignment is not as critical, especially with DODGE K, DI,TAF and EXL Tapered Roller Bearings. K, DI, and TAF bearings are designed to allow as much as 2° to 7° of static misalignment depending on bore size. To ensure good alignment, mounting surfaces must be checked for flatness and must lie in the same plane. When tightening base bolts and cap bolts, each bolt should be alternately tightened in incremental torque values until full torque is achieved to prevent the angular shifting of the pillow block that occurs when one bolt is tightened to its full torque. Shimming may be required to minimize misalignment..

Table 1 - Set Screw Torque Table

Shaft Size (Inches)	Set Screws Size	Tightening Torque
1-3/16 - 1-11/16	5/16 - 18	165 in-lbs
1-3/4 - 2-1/2	3/8 - 16	290 in-lbs
2-11/16 - 3-1/2	1/2 - 13	620 in-lbs
3-15/16 - 5	5/8 - 11	1325 in-lbs
5-7/16 - 6	3/4 - 10	2150 in-lbs
6-7/16 - 7	7/8 - 9	5130 in-lbs

Shaft Size (mm)	Set Screws Size	Tightening Torque
35 - 40mm	M8	17.8 NM
45 - 65mm	M10	35 NM
70 - 75mm	M12	57 NM
80 - 90mm	M12	57 NM
100 - 125mm	M16	126 NM

SELECTION

DODGE



Type E-Xtra, Type K, DOUBLE-INTERLOCK, TAF and EXL

Table 2 - E, K, DI, TAF and EXL Tapered Roller Bearing Radial And Thrust Factors

Shaft Size	e	$F_A/FR<e$		$F_A/F_R>e$		Dynamic Capacity C_{90}	Static Capacity C_0	Maximum RPM	Maximum RPM	Maximum Allowable Slip Fit Radial Load, F_R **, Lbs	
		X	Y	X	Y	Lbs.	Lbs.	XTS-SEAL	E-TECT	E, DI, EXL & TAF	K
1-3/16 1-1/4	0.49	0.87	1.77	0.70	2.14	3,450	15,760	4,490	3,100	3,100	2,100
1-3/8 1-7/16	0.46	0.87	1.89	0.70	2.28	5,500	26,000	3,820	2,675	5,000	3,300
1-1/2 1-5/8 1-11/16	0.44	0.87	1.96	0.70	2.37	7,070	33,000	3,320	2,325	6,400	4,300
1-3/4 1-7/8 1-15/16 2	0.33	0.87	2.64	0.70	3.18	9,300	43,000	3,050	2,135	8,400	5,600
2-3/16	0.36	0.87	2.38	0.70	2.87	9,850	48,200	2,730	1,900	8,900	5,900
2-1/4 2-7/16 2-1/2	0.40	0.87	2.17	0.70	2.63	10,600	54,000	2,420	1,700	9,500	6,300
2-11/16 2-3/4 2-15/16 3	0.46	0.87	1.87	0.70	2.26	11,120	61,200	2,060	1,440	10,000	6,700
3-3/16 3-1/4 3-7/16 3-1/2	0.50	0.87	1.71	0.70	2.07	17,750	108,600	1,640	1,145	16,000	10,500
3-15/16 4	0.49	0.87	1.77	0.70	2.14	24,400	154,000	1,530	1,070	22,000	14,600
4-7/16 4-1/2	0.53	0.87	1.63	0.70	1.97	30,000	188,400	1,360	950	27,000	----
4-15/16 5	0.47	0.87	1.83	0.70	2.21	41,310	266,000	1,200	840	35,000	----
5-7/16 5-15/16 6	0.49	0.87	1.76	0.70	2.12	40,700	354,000	915	640	42,400	----
6-7/16 6-1/2 6-15/16 7	0.54	0.87	1.61	0.70	1.95	69,200	574,000	790	550	72,000	----

Comparing Spherical To Taper Roller Bearings: The dynamic capacity C (spherical) and C_{90} (taper) are not to the same base. To compare basic dynamic capacities, multiply C x .259 and compare to C_{90}.

*C_{90} - Dynamic capacity based on a rated life of 90 million revolutions or 3000 hours at 500 RPM.

** If load exceeds maximum allowable slip fit radial load, (F_R), line-to-line, to light press fit of shaft required. Application up to maximum slip fit radial load may be applied if recommended shaft tolerances are used.



Type E-Xtra, Type K, DOUBLE-INTERLOCK, TAF and EXL

Table 3 - Easy Selection for Type E-Xtra, Type K, TAF and EXL

Shaft Size	L10 hours	Allowable Equivalent Radial Load (Lbs.) at various Revolutions Per Minute																				
		50	100	150	250	500	790	915	1200	1360	1530	1640	1750	2060	2420	2730	3050	3320	3600	3820	4490
1-3/8" 1-1/4"	10000	4797	3896	3450	2960	2404	2096	2005	1849	1781	1719	1683	1651	1572	1498	1445	1398	1362	1330	1306	1244
	30000	3450	2802	2481	2129	1729	1507	1442	1330	1281	1236	1211	1187	1131	1077	1039	1005	980	956	939	895
	40000	3165	2571	2276	1953	1586	1383	1323	1220	1175	1134	1111	1089	1037	988	953	922	899	877	862	821
	60000	2802	2276	2015	1729	1404	1224	1172	1080	1040	1004	983	964	918	875	844	816	796	777	763	727
	100000	2404	1953	1729	1483	1205	1050	1005	927	892	861	844	827	788	751	724	700	683	666	655	624
1-3/8" 1-7/16"	10000	7647	6211	5500	4719	3833	3341	3197	2947	2839	2740	2684	2632	2506	2388	2303	2228	2172	2120	2082	
	30000	5500	4467	3956	3394	2757	2403	2299	2120	2042	1971	1930	1893	1803	1718	1657	1602	1562	1525	1498	
	40000	5045	4098	3629	3113	2529	2204	2109	1945	1873	1808	1771	1736	1654	1576	1520	1470	1433	1399	1374	
	60000	4467	3629	3213	2757	2239	1952	1868	1722	1658	1601	1568	1538	1464	1395	1346	1302	1269	1238	1217	
	100000	3833	3113	2757	2365	1921	1675	1602	1477	1423	1373	1345	1319	1256	1197	1154	1117	1089	1062	1044	
1-1/2" 1-5/8" 1-11/16"	10000	9830	7984	7070	6065	4927	4295	4110	3789	3649	3522	3450	3383	3222	3070	2961	2864	2792			
	30000	7070	5743	5085	4362	3543	3089	2956	2725	2625	2533	2481	2433	2317	2208	2129	2060	2008			
	40000	6485	5268	4664	4002	3250	2834	2711	2500	2408	2324	2276	2232	2126	2025	1953	1889	1842			
	60000	5743	4664	4130	3543	2878	2509	2401	2213	2132	2058	2015	1976	1882	1793	1730	1673	1631			
	100000	4927	4002	3543	3040	2469	2153	2060	1899	1829	1765	1729	1696	1615	1539	1484	1435	1399			
1-3/4" 1-7/8" 1-15/16" 2"	10000	12931	10503	9300	7979	6481	5650	5406	4984	4800	4633	4538	4450	4238	4038	3895	3767				
	30000	9300	7554	6689	5738	4661	4063	3888	3584	3452	3332	3264	3201	3048	2904	2801	2709				
	40000	8531	6929	6136	5264	4276	3727	3567	3288	3167	3057	2994	2936	2796	2664	2569	2485				
	60000	7554	6136	5433	4661	3786	3300	3158	2911	2804	2707	2651	2600	2476	2359	2275	2201				
	100000	6481	5264	4661	3999	3248	2832	2709	2498	2406	2322	2274	2230	2124	2024	1952	1888				
2-3/16"	10000	13695	11124	9850	8450	6864	5984	5726	5278	5084	4907	4806	4714	4489	4277	4125					
	30000	9850	8001	7084	6078	4937	4304	4118	3796	3656	3530	3457	3390	3228	3076	2967					
	40000	9036	7339	6499	5575	4529	3948	3778	3483	3354	3238	3171	3110	2961	2822	2721					
	60000	8001	6499	5754	4937	4010	3496	3345	3084	2970	2867	2808	2754	2622	2498	2410					
	100000	6864	5575	4937	4235	3440	2999	2870	2646	2548	2460	2409	2362	2250	2143	2067					
2-1/4" 2-7/16" 2-1/2"	10000	14738	11971	10600	9094	7387	6439	6162	5680	5471	5281	5172	5072	4830	4602						
	30000	10600	8610	7624	6541	5313	4631	4432	4085	3935	3798	3720	3648	3474	3310						
	40000	9724	7898	6993	6000	4873	4248	4065	3748	3610	3484	3412	3347	3187	3036						
	60000	8610	6993	6192	5313	4315	3762	3600	3318	3196	3085	3022	2963	2822	2689						
	100000	7387	6000	5313	4558	3702	3227	3088	2847	2742	2647	2592	2542	2421	2307						
2-11/16" 2-3/4" 2-15/16" 3"	10000	15461	12558	11120	9540	7749	6755	6464	5959	5739	5540	5426	5321	5067							
	30000	11120	9032	7998	6861	5573	4859	4649	4286	4128	3985	3902	3827	3644							
	40000	10201	8285	7336	6294	5112	4457	4265	3932	3787	3655	3580	3511	3343							
	60000	9032	7336	6496	5573	4527	3946	3776	3481	3353	3237	3170	3109	2960							
	100000	7749	6294	5573	4781	3884	3386	3240	2987	2877	2777	2719	2667	2540							
3-3/16" 3-1/4" 3-7/16" 3-1/2"	10000	24679	20046	17750	15228	12369	10783	10318	9512	9161	8843	8661									
	30000	17750	14417	12766	10952	8896	7755	7421	6841	6589	6360	6229									
	40000	16282	13225	11711	10047	8160	7114	6807	6276	6044	5834	5714									
	60000	14417	11711	10369	8896	7226	6299	6028	5557	5352	5166	5060									
	100000	12369	10047	8896	7632	6199	5404	5171	4767	4592	4432	4341									
3-15/16" 4"	10000	33925	27556	24400	20933	17003	14823	14184	13076	12594	12157										
	30000	24400	19819	17549	15056	12229	10661	10201	9404	9058	8743										
	40000	22382	18180	16098	13811	11218	9779	9358	8627	8309	8020										
	60000	19819	16098	14254	12229	9933	8659	8286	7639	7357	7102										
	100000	17003	13811	12229	10491	8522	7429	7109	6553	6312	6093										

For maximum RPM see Table 2 on page B10-14
In the shaded area, E, DI, EXL, and TAF mounted units require a line-to-line to light press fit of shaft
In the boxed area, Type K mounted units require a line-to-line to light press fit of shaft.

SELECTION



Type E-Xtra, Type K, DOUBLE-INTERLOCK, TAF and EXL

Table 3 - Easy Selection for Type E-Xtra, Type K, TAF and EXL

Shaft Size	L10 hours	Allowable Equivalent Radial Load (Lbs.) at various Revolutions Per Minute																			
		50	100	150	250	500	790	915	1200	1360	1530	1640	1750	2060	2420	2730	3050	3320	3600	3820	4490
4-7/16" 4-1/2"	10000	41712	33880	30000	25738	20905	18225	17439	16077	15484											
	30000	30000	24368	21577	18511	15036	13108	12543	11563	11137											
	40000	27519	22353	19793	16980	13792	12024	11505	10607	10216											
	60000	24368	19793	17526	15036	12213	10647	10188	9392	9046											
	100000	20905	16980	15036	12899	10477	9134	8740	8057	7760											
4-15/16" 5"	10000	57437	46653	41310	35441	28787	25095	24014	22137												
	30000	41310	33554	29711	25490	20704	18049	17271	15922												
	40000	37894	30780	27254	23382	18992	16557	15843	14605												
	60000	33554	27254	24133	20704	16817	14661	14028	12933												
	100000	28787	23382	20704	17762	14428	12578	12035	11095												
5-7/16 5-15/16 6	10000	56589	45964	40700	34917	28362	24725	23659													
	30000	40700	33059	29272	25113	20398	17783	17016													
	40000	37335	30325	26852	23037	18712	16312	15609													
	60000	33059	26852	23777	20398	16569	14444	13821													
	100000	28362	23037	20398	17500	14214	12392	11858													
6-7/16 6-1/2 6-15/16 7	10000	96215	78151	69200	59368	48222	42038														
	30000	69200	56208	49770	42699	34682	30235														
	40000	63478	51560	45655	39168	31814	27735														
	60000	56208	45655	40426	34682	28171	24558														
	100000	48222	39168	34682	29754	24168	21069														

For maximum RPM see Table 2 on page B10-14
In the shaded area, E, DI, EXL, and TAF mounted units require a line-to-line to light press fit of shaft
In the boxed area, Type K mounted units require a line-to-line to light press fit of shaft.



Type E-Xtra, DOUBLE-INTERLOCK, TAF and EXL

Table 4 - Permissible Thrust Load, Lbs.*

Shaft Size Inches	*E		*K/DI, TAF, EXL	
	2-Bolt	4-Bolt	2-Bolt	4-Bolt
1-3/16	2000		1400	
1-1/4	2000		1400	
1-3/8	2590		2590	
1-7/16	2590		2590	
1-1/2	2590		2590	
1-5/8	2590		2590	
1-11/16	2590		2590	
1-3/4	3454		3454	
1-7/8	3454		3454	
1-15/16	3454		3454	
2	3454		3454	
2-3/16	3454		3454	
2-1/4	3454	3454	3454	3454
2-7/16	3454	3454	3454	3454
2-1/2	3454	3454	3454	3454
2-11/16	5181	5181	5181	5181
2-3/4	5181	5181	5181	5181
2-15/16	5181	5181	5181	5181
3	5181	5181	5181	5181
3-3/16	5181	5181	4300	5181
3-1/4	5181	5181	4300	5181
3-7/16	5181	5181	4300	5181
3-1/2	5181	5181	4300	5181
3-15/16		6908		6908
4		6908		6908
4-7/16		6908		6908
4-1/2		6908		6908
4-15/16		6908		6908
5		6908		6908
5-7/16		8635		8635
5-15/16		8635		8635
6		8635		8635
6-7/16		12282		12282
6-1/2		12282		12282
6-15/16		12282		12282
7		12282		12282

Note: The limits above apply to set screw shaft mounting or pillow block over turning force. Under heavy thrust loads it is always wise to use shear bars. At all times, the L_{10} life of the bearing should be checked for proper selection and life requirements. For thrust loads larger than listed or heavy thrust loading on other style housing, contact DODGE Engineering for recommendations.

* Does not include Piloted Flange
Piloted Flange up to and including 3-1/2" and all sizes of Type K only have one setscrew locking collar and therefore the above listed permissible thrust load values must be decreased by 1/2.

SELECTION



Type E-Xtra, Type K, DOUBLE-INTERLOCK, TAF and EXL

Table 5 - K, DI and TAF Maximum Axial Expansion (Inches)

Bore Size (Inches)	Type K DOUBLE-INTERLOCK		TAF	EXL
	Pillow Block	Flange		
1-3/16 - 1-1/4	0.252	--	--	.280
1-3/8 - 1-7/16	0.188	0.187	0.188	.280
1-1/2 - 1-11/16	0.188	0.187	0.188	.280
1-3/4 - 2	0.562	0.187	0.562	.280
2-3/16	0.562	0.187	0.562	.280
2-1/4 - 2-1/2	0.562	0.312	0.562	.280
2-11/16 - 3	0.562	0.312	0.562	.280
3-3/16 - 3-1/2	0.562	0.312	0.562	.280
3-15/16 - 4	0.674	0.312	0.674	.280
4-7/16 - 4-1/2	0.674	0.812	0.674	.280
4-15/16 - 5	0.674	0.812	0.674	.280
5-7/16 - 6	0.500	--	0.875	--
6-7/16 - 7	0.500	--	0.875	--

Table 6 - Definition Of Operating Conditions For Tapered Roller Bearings

LOW SPEED	UP TO 20% OF MAX. RPM (TABLE 1)
MEDIUM SPEED	OVER 20% TO 80% OF MAX. RPM
HIGH SPEED	OVER 80% OF MAX. RPM
LIGHT LOAD	UP TO 30% OF C_{90} (TABLE 1)
NORMAL LOAD	OVER 30% TO 70% OF C_{90}
HEAVY LOAD	OVER 70% OF C_{90}
LOW TEMPERATURE	-100°F TO 20°F
MEDIUM TEMPERATURE	OVER 20°F TO 200°F
HIGH TEMPERATURE	OVER 200°F TO 300°F
VERY HIGH TEMPERATURE	OVER 300°F TO 400°F



Type E-Xtra

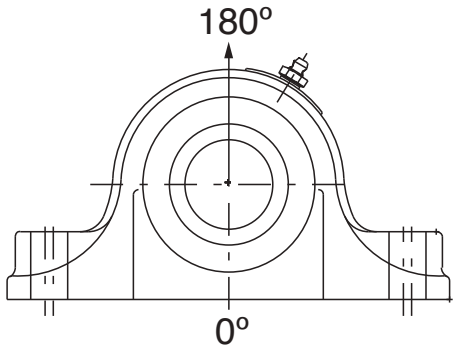

Table 7 - Housing Ratings - Type E-Xtra (Solid Housing)

Shaft Size (Inches)	Maximum Recommended Housing Cap Loads, Lbs. Gray Iron 180°
1-3/16 - 1-1/4	1,600
1-3/8 - 1-7/16	3,150
1-1/2 - 1-11/16	3,000
1-3/4 - 2	5,150
2-3/16	3,500
2-1/4 - 2-1/2	6,550
2-11/16 - 3	7,000
3-3/16 - 3-1/2	15,700
3-15/16 - 4	16,250
4-7/16 - 4-1/2	21,000
4-15/16 - 5	22,860
5-7/16 - 6	43,600
6-7/16 - 7	46,000

*When utilizing heavy cap loads on pillow block housings, the installation must adhere to the following procedures.

1. The pillow block base bolts must be of **Grade 8 strength with hardened washers and properly tightened** to the mounting structure.
2. The use of stop bars (shear strips) against pillow block where side loads are encountered
3. In all cases where loads are heave, the L_{10} life of the bearing should be checked for proper selection and life requirements

SELECTION

Type K, DOUBLE-INTERLOCK, TAF and EXL

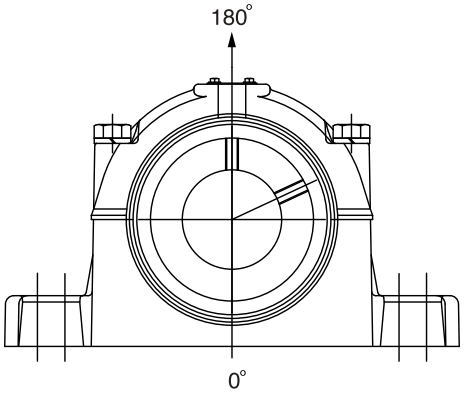

Table 8: Housing Ratings
Type K, DI, and EXL Housing (Split Housing)

Shaft Size (Inches)	Maximum Recommended Housing Cap Loads, Lbs. 180°
1-3/16 - 1-1/4	4,300
1-3/8 - 1-7/16	5,060
1-1/2 - 1-11/16	5,940
1-3/4 - 2	8,660
2-3/16	10,100
2-1/4 - 2-1/2	10,100
2-11/16 - 3	11,220
3-3/16 - 3-1/2	16,170
3-15/16 - 4	19,580
4-7/16 - 4-1/2	20,130
4-15/16 - 5	24,530
5-7/16 - 6	35,200
6-7/16 - 7	56,000

Table 9: Housing Ratings
TAF (Split Housing)

Shaft Size (Inches)	Maximum Recommended Housing Cap Loads, Lbs. 180°
1-7/16	4,600
1-11/16	5,400
1-15/16	7,875
2-3/16	9,200
2-7/16 - 2-1/2	9,220
2-15/16 - 3	10,200
3-7/16 - 3-1/2	14,700
3-15/16 - 4	17,800
4-7/16 - 4-1/2	18,300
4-15/16 - 5	22,300
5-7/16 - 6	30,000
6-7/16 - 6-1/2	30,000
6-15/16 - 7	48,000

*When utilizing heavy cap loads on pillow block housings, the installation must adhere to the following procedures.

1. The pillow block base bolts must be of **Grade 8 strength with hardened washers and properly tightened to the mounting structure.**
2. The use of stop bars (shear strips) against pillow block where side loads are encountered
3. In all cases where loads are heavy, the L_{10} life of the bearing should be checked for proper selection and life requirements

DODGE



DODGE®

MOUNTED BEARINGS
APPLICATION DATA SHEET

Instructions: Complete all applicable information and Fax to DODGE 864-281-2317 or e-mail brgpttechsupport@dodgeindustrial.com

DIST. ☐ USER ☐ OEM ☐

Company _____ Date _____

Address _____

Name _____ Phone _____ Fax _____

Type of Equipment (sketch drive on separate sheet) _____

Service Conditions:

Shaft Speed: Normal _____ Maximum _____

Loads: Radial _____ Thrust _____ Shock (frequency) _____

Shaft Size: _____ Shaft Tolerance (specify if not commercial) _____

Duty Cycle: Hours/Day _____ Days/Week _____ Weeks/Year _____

Environment:

Ambient Temperature: Summer _____ °F Winter _____ °F

External Heat: Source of Heat _____

Temperature _____ °F Distance from Bearing _____

Air: Clean _____ Contaminated _____ Contamination Type _____

Gas: Clean _____ Contaminated _____ Contamination Type _____

Liquid: Type _____ Concentration _____

Other: (Including washdowns) _____

Experience: (If applicable)

Type of Bearing Currently Used: _____

Life Realized _____ Type of Failure _____

Other Pertinent Data

_____

_____

_____

L_{-10} Hours Required: _____

Dimensional Restrictions: Centerline Height _____

Bolt Pattern _____

Other _____

SELECTION/DIMENSIONS

Type E-Xtra Pillow Block - Inch
2-BOLT BASE

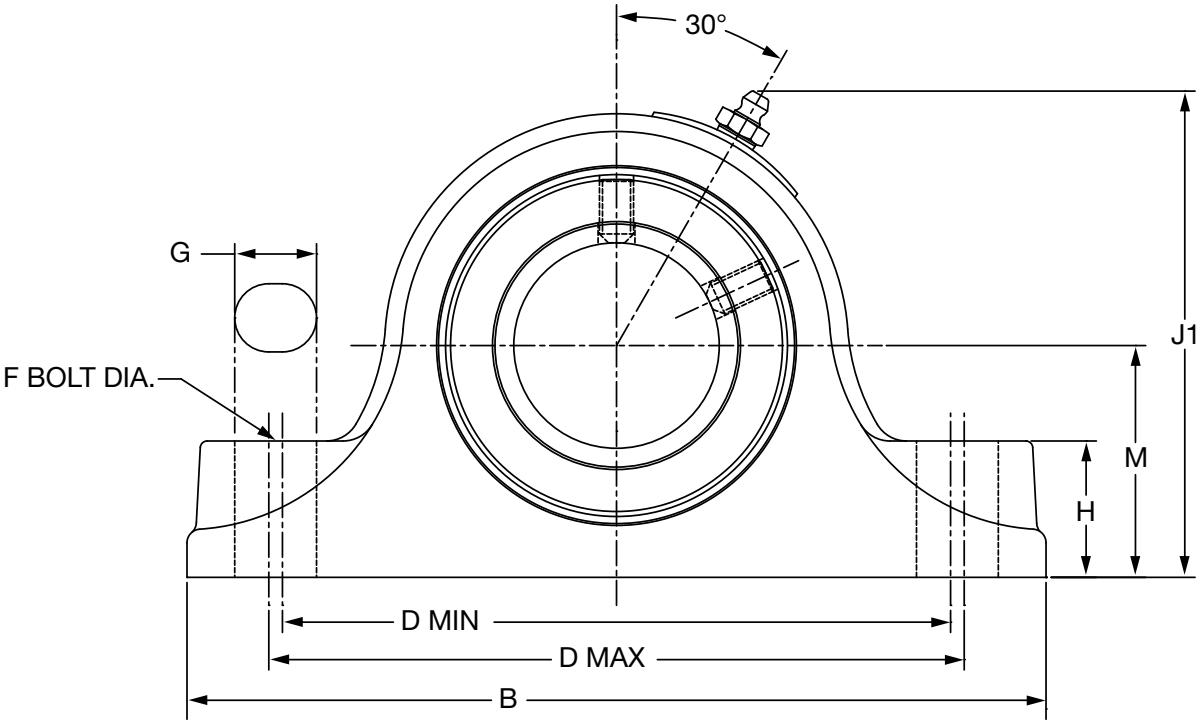

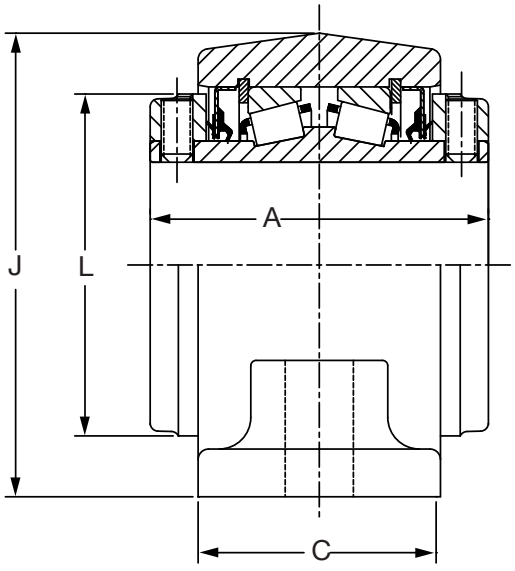

1-3/16” THRU 3” CONSTRUCTION

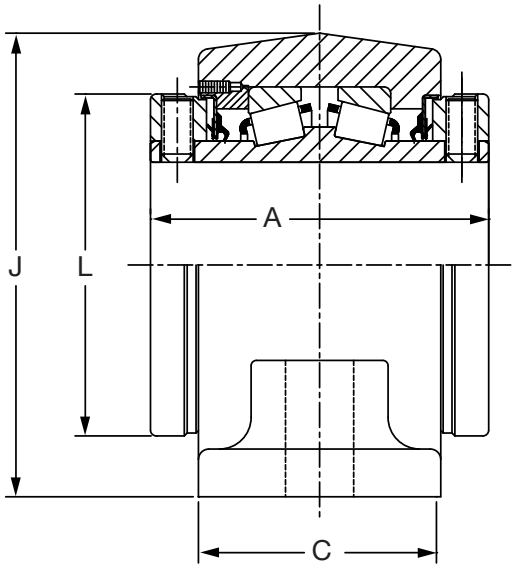

3-3/16” THRU 3-12” CONSTRUCTION



Type E-Xtra Pillow Block - Inch
2-BOLT BASE

Gray Iron				Cast Steel			
Shaft Size Inches #	Part Number	Part Name	Weight Lbs (Approx)	Shaft Size Inches #	Part Number	Part Name	Weight Lbs
1-3/16	**023000**	P2B-E-103R	4	1-3/16	**023047**	SP2B-E-103R	4
1-1/4	**023001**	P2B-E-104R	4	1-1/4	**023048**	SP2B-E-104R	4
1-3/8	**023002**	P2B-E-106R	7	1-3/8	**023049**	SP2B-E-106R	7
1-7/16	**023003**	P2B-E-107R	7	1-7/16	**023050**	SP2B-E-107R	7
1-1/2	**023004**	P2B-E-108R	10	1-1/2	**023051**	SP2B-E-108R	10
1-5/8	**023005**	P2B-E-110R	10	1-5/8	**023052**	SP2B-E-110R	10
1-11/16	**023006**	P2B-E-111R	10	1-11/16	**023053**	SP2B-E-111R	10
1-3/4	**023007**	P2B-E-112R	12	1-3/4	**023054**	SP2B-E-112R	11
1-7/8	**023008**	P2B-E-114R	12	1-7/8	**023055**	SP2B-E-114R	11
1-15/16	**023009**	P2B-E-115R	12	1-15/16	**023056**	SP2B-E-115R	11
2	**023010**	P2B-E-200R	12	2	**023057**	SP2B-E-200R	11
2-3/16	**023011**	P2B-E-203R	15	2-3/16	**023058**	SP2B-E-203R	14
2-1/4	**023012**	P2B-E-204R	21	2-1/4	**023059**	SP2B-E-204R	19
2-7/16	**023013**	P2B-E-207R	20	2-7/16	**023060**	SP2B-E-207R	19
2-1/2	**023014**	P2B-E-208R	20	2-1/2	**023061**	SP2B-E-208R	19
2-11/16	**023015**	P2B-E-211R	29	2-11/16	**023062**	SP2B-E-211R	26
2-3/4	**023016**	P2B-E-212R	28	2-3/4	**023063**	SP2B-E-212R	26
2-15/16	**023017**	P2B-E-215R	27	2-15/16	**023064**	SP2B-E-215R	26
3	**023018**	P2B-E-300R	27	3	**023065**	SP2B-E-300R	26
3-3/16	**023019**	P2B-E-303R	48	3-3/16	**023066**	SP2B-E-303R	44
3-1/4	**023020**	P2B-E-304R	47	3-1/4	**023067**	SP2B-E-304R	44
3-7/16	**023021**	P2B-E-307R	46	3-7/16	**023068**	SP2B-E-307R	44
3-1/2	**023022**	P2B-E-308R	45	3-1/2	**023069**	SP2B-E-308R	44

Consult DODGE For Sizes Not Listed

Consult DODGE For Sizes Not Listed

Shaft Size (Inches)	A	B	C	D		F	G	H	J	J1	L	M
				Min	Max	Bolt Dia						
1-3/16 1-1/4	2.75	6.00	1.88	4.75	4.81	1/2	0.59	0.88	3.00	3.28	2.25	1.50
1-3/8 1-7/16	3.00	7.38	2.13	5.63	5.88	1/2	0.75	1.13	3.75	4.00	2.75	1.88
1-1/2 1-5/8 1-11/16	3.38	7.88	2.38	6.13	6.38	1/2	0.75	1.25	4.25	4.47	3.19	2.13
1-3/4 1-7/8 1-15/16 2	3.50	8.88	2.50	6.88	7.13	5/8	0.88	1.31	4.50	4.69	3.44	2.25
2-3/16	3.75	9.63	2.63	7.63	7.88	5/8	0.88	1.50	5.00	5.17	3.75	2.50
2-1/4 2-7/16 2-1/2	4.00	10.50	2.88	8.38	8.63	5/8	0.88	1.63	5.50	5.63	4.06	2.75
2-11/16 2-3/4 2-15/16 3	4.50	12.00	3.00	9.31	9.69	3/4	1.00	1.88	6.25	6.34	4.72	3.13
3-3/16 3-1/4 3-7/16 3-1/2	5.00	14.00	3.50	10.81	11.19	7/8	1.19	2.25	7.50	7.50	5.50	3.75

NOTE: All sizes use a 1/8-27 NPT hydraulic grease fitting

FEATURES/BENEFITS PAGE B10-2	HOW TO ORDER/NOMENCLATURE PAGE B10-9	EASY SELECTION PAGE B10-15	ACCESSORIES PAGE B10-64

SELECTION/DIMENSIONS

Type E-Xtra Pillow Block - Inch
4-BOLT BASE

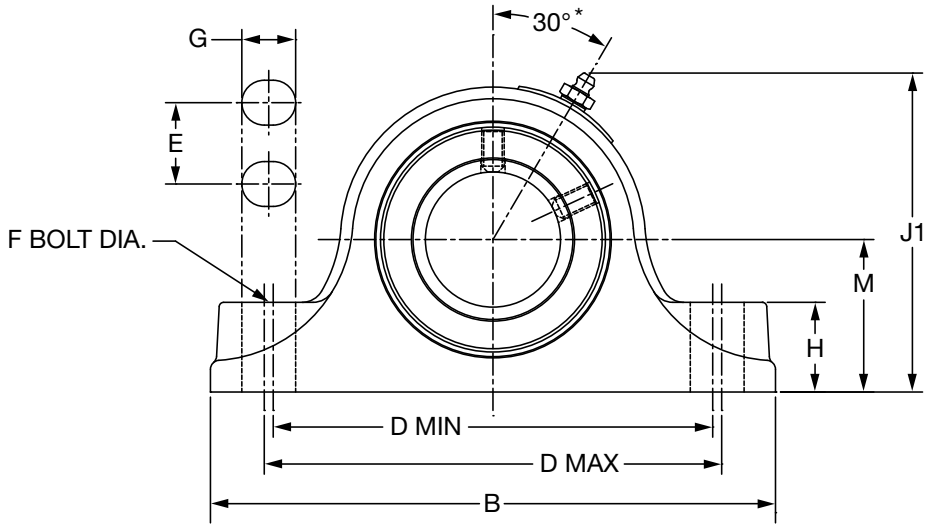

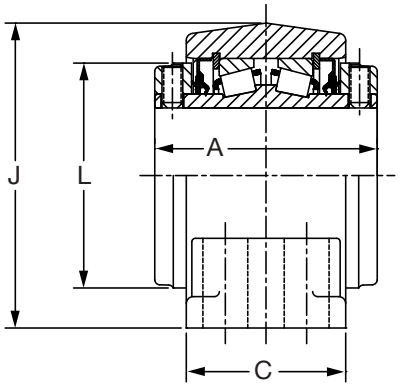

2-1/4" THRU 3" CONSTRUCTION

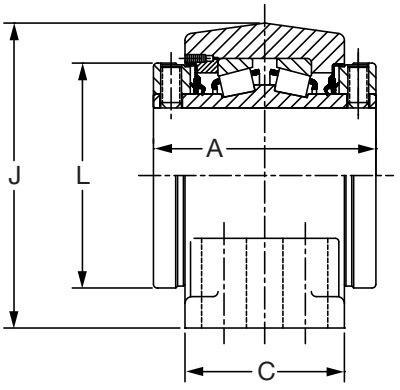

3-3/16" THRU 5" CONSTRUCTION

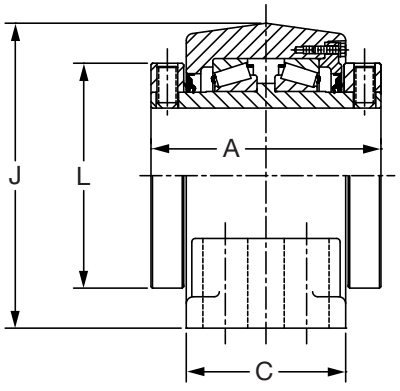

5-7/16" THRU 7" CONSTRUCTION

DODGE



Type E-Xtra Pillow Block - Inch

4-BOLT BASE

Gray Iron				Cast Steel			
Shaft Size Inches #	Part Number	Part Name	Weight Lbs (Approx)	Shaft Size Inches #	Part Number	Part Name	Weight Lbs
2-1/4	**023023**	P4B-E-204R	20	2-1/4	----------	----------	----------
2-7/16	**023024**	P4B-E-207R	20	2-7/16	----------	----------	----------
2-1/2	**023025**	P4B-E-208R	19	2-1/2	----------	----------	----------
2-11/16	**023026**	P4B-E-211R	30	2-11/16	----------	----------	----------
2-3/4	**023027**	P4B-E-212R	28	2-3/4	----------	----------	----------
2-15/16	**023028**	P4B-E-215R	28	2-15/16	----------	----------	----------
3	**023029**	P4B-E-300R	28	3	----------	----------	----------
3-3/16	**023030**	P4B-E-303R	47	3-3/16	----------	----------	----------
3-1/4	**023031**	P4B-E-304R	47	3-1/4	----------	----------	----------
3-7/16	**023032**	P4B-E-307R	46	3-7/16	----------	----------	----------
3-1/2	**023033**	P4B-E-308R	45	3-1/2	----------	----------	----------
3-15/16	**023690**	P4B-E-315R	69	3-15/16	**023070**	SP4B-E-315R	65
4	**023691**	P4B-E-400R	69	4	**023071**	SP4B-E-400R	65
4-7/16	**023692**	P4B-E-407R	85	4-7/16	**023072**	SP4B-E-407R	81
4-1/2	**023693**	P4B-E-408R	85	4-1/2	**023073**	SP4B-E-408R	81
4-15/16	**023694**	P4B-E-415R	134	4-15/16	**023074**	SP4B-E-415R	132
5	**023695**	P4B-E-500R	133	5	**023075**	SP4B-E-500R	132
5-7/16	**023040**	P4B-E-507R	230	5-7/16	----------	----------	----------
5-15/16	**023041**	P4B-E-515R	250	5-15/16	----------	----------	----------
6	**023042**	P4B-E-600R	245	6	----------	----------	----------
6-7/16	**023043**	P4B-E-607R	356	6-7/16	----------	----------	----------
6-1/2	**023044**	P4B-E-608R	350	6-1/2	----------	----------	----------
6-15/16	**023045**	P4B-E-615R	340	6-15/16	----------	----------	----------
7	**023046**	P4B-E-700R	335	7	----------	----------	----------

Consult DODGE For Sizes Not Listed

Consult DODGE For Sizes Not Listed

Shaft Size Inches	A	B	C*	D		E	F Bolt Dia	G	H	J1	J	L	M
				Min	Max								
2-1/4 2-7/16 2-1/2	4.00	10.50	3.50	8.31	8.69	1.88	5/8	0.88	1.63	5.50	5.63	4.06	2.75
2-11/16 2-3/4 2-15/16 3	4.50	12.00	4.00	9.19	9.81	2.13	5/8	1.00	1.88	6.25	6.34	4.72	3.13
3-3/16 3-1/4 3-7/16 3-1/2	5.00	13.50	4.50	10.75	11.25	2.38	3/4	1.19	2.25	7.50	7.50	5.50	3.75
3-15/16 4	6.25	15.25	4.50	12.25	12.75	2.25	3/4	1.13	2.44	8.50	8.44	6.00	4.25
4-7/16 4-1/2	6.75	16.63	4.63	13.25	13.75	2.50	3/4	1.13	2.75	9.38	9.28	6.45	4.75
4-15/16 5	7.25	18.50	5.13	15.25	15.75	2.88	7/8	1.25	3.00	10.88	10.69	7.45	5.50
5-7/16 5-15/16 6	9.00	22.00	6.25	17.38	19.13	3.75	1	2.00	3.25	13.19	----	9.38	6.69
6-7/16 6-1/2 6-15/16 7	10.50	26.00	7.13	21.25	23.25	4.63	1	2.00	3.69	14.94	----	11.38	7.50

NOTE: All sizes use a 1/8-27 NPT hydraulic grease fitting

FEATURES/BENEFITS PAGE B10-2	HOW TO ORDER/NOMENCLATURE PAGE B10-9	EASY SELECTION PAGE B10-15	ACCESSORIES PAGE B10-64

SELECTION/DIMENSIONS

Type E-Xtra Flange Bearing - Inch
4-BOLT BASE

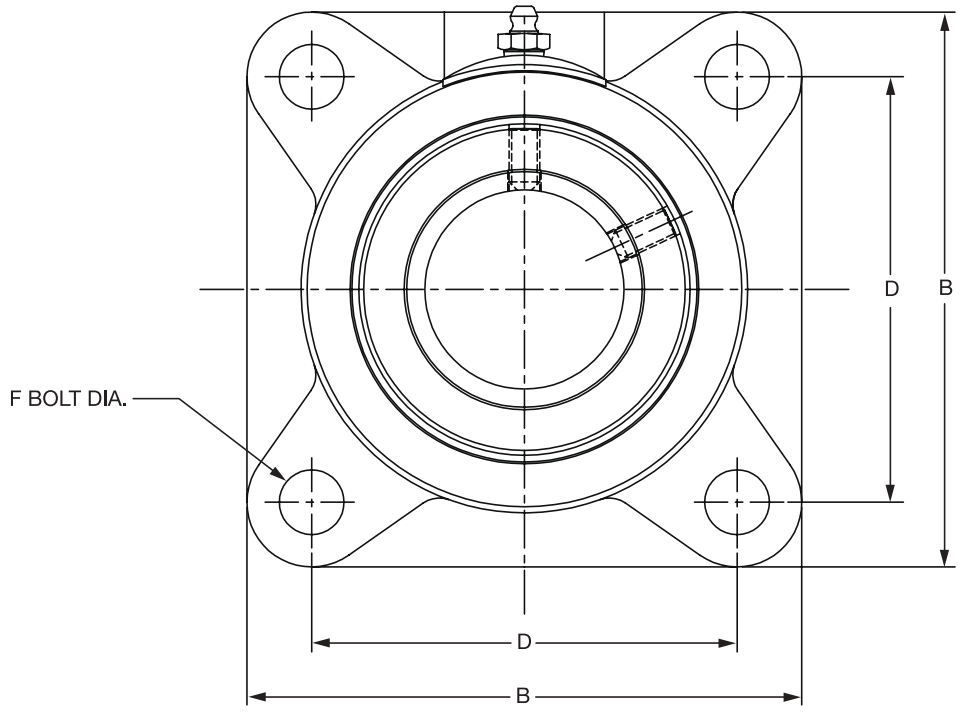

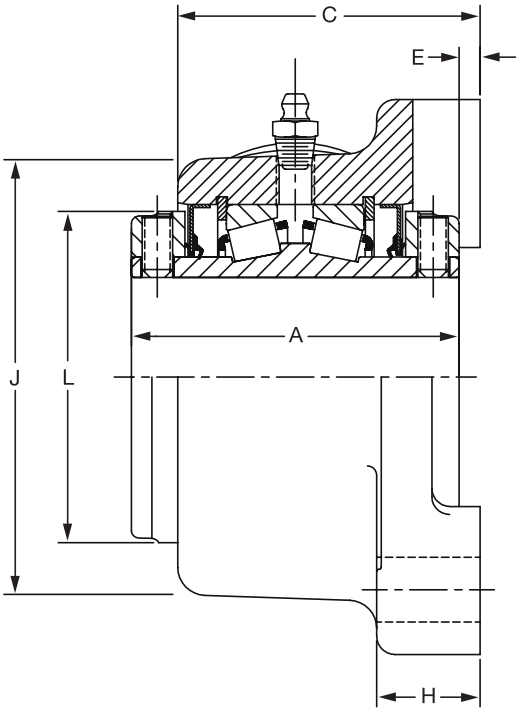

1-3/16" THRU 3" CONSTRUCTION

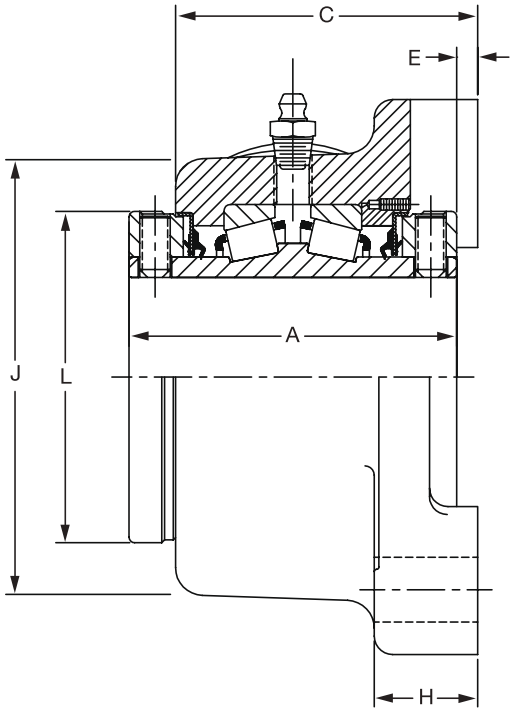

3-3/16" THRU 4-1/2" CONSTRUCTION

FEATURES/BENEFITS PAGE B10-2	HOW TO ORDER/NOMENCLATURE PAGE B10-9	EASY SELECTION PAGE B10-15	ACCESSORIES PAGE B10-64

DODGE



Type E-Xtra Flange Bearing - Inch
4-BOLT BASE

Gray Iron			
Shaft Size Inches #	Part Number	Part Name	Weight Lbs (Approx)
1-3/16	**023093**	F4B-E-103R	4
1-1/4	**023094**	F4B-E-104R	4
1-3/8	**023095**	F4B-E-106R	7
1-7/16	**023096**	F4B-E-107R	7
1-1/2	**023097**	F4B-E-108R	11
1-5/8	**023098**	F4B-E-110R	11
1-11/16	**023099**	F4B-E-111R	11
1-3/4	**023100**	F4B-E-112R	12
1-7/8	**023101**	F4B-E-114R	12
1-15/16	**023102**	F4B-E-115R	12
2	**023103**	F4B-E-200R	12
2-3/16	**023104**	F4B-E-203R	15
2-1/4	**023105**	F4B-E-204R	21
2-7/16	**023106**	F4B-E-207R	20
2-1/2	**023107**	F4B-E-208R	19
2-11/16	**023108**	F4B-E-211R	28
2-3/4	**023109**	F4B-E-212R	28
2-15/16	**023110**	F4B-E-215R	27
3	**023111**	F4B-E-300R	26
3-3/16	**023112**	F4B-E-303R	52
3-1/4	**023113**	F4B-E-304R	51
3-7/16	**023114**	F4B-E-307R	50
3-1/2	**023115**	F4B-E-308R	50
3-15/16	**023116**	F4B-E-315R	75
4	**023117**	F4B-E-400R	75
4-7/16	**023118**	F4B-E-407R	90
4-1/2	**023119**	F4B-E-408R	90

Consult DODGE For Sizes Not Listed.

Shaft Size Inches	A	B	C	D	E	F Bolt Dia.	H	J	L
1-3/16 1-1/4	2.75	3.75	2.34	2.88	0.06	3/8	1.00	2.94	2.25
1-3/8 1-7/16	3.00	4.63	2.59	3.50	0.06	1/2	1.06	3.50	2.75
1-1/2 1-5/8 1-11/16	3.38	5.38	2.97	4.13	0.13	1/2	1.19	4.19	3.19
1-3/4 1-7/8 1-15/16 2	3.50	5.63	3.09	4.38	0.13	1/2	1.19	4.44	3.44
2-3/16	3.75	6.25	3.28	4.88	0.13	5/8	1.38	4.88	3.75
2-1/4 2-7/16 2-1/2	4.00	6.88	3.56	5.38	0.19	5/8	1.50	5.31	4.06
2-11/16 2-3/4 2-15/16 3	4.50	7.75	3.94	6.00	0.19	3/4	1.63	6.00	4.72
3-3/16 3-1/4 3-7/16 3-1/2	5.00	9.25	4.50	7.00	0.25	3/4	1.88	7.25	5.50
3-15/16 4	6.25	10.25	5.63	7.75	0.25	7/8	2.13	8.25	6.00
4-7/16 4-1/2	6.75	10.88	5.94	8.75	0.34	7/8	2.44	8.75	6.45

NOTE: All sizes use a 1/8-27 NPT hydraulic grease fitting

FEATURES/BENEFITS PAGE B10-2	HOW TO ORDER/NOMENCLATURE PAGE B10-9	EASY SELECTION PAGE B10-15	ACCESSORIES PAGE B10-64

SELECTION/DIMENSIONS

Type E-Xtra Piloted Flange

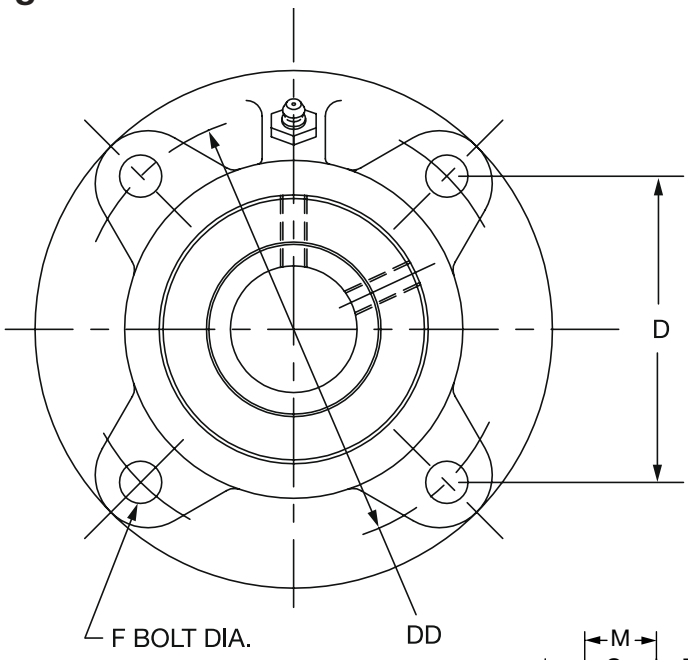

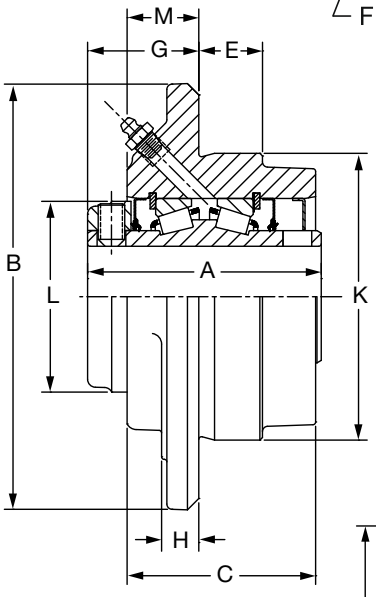

1-3/16" THRU 3"
CONSTRUCTION

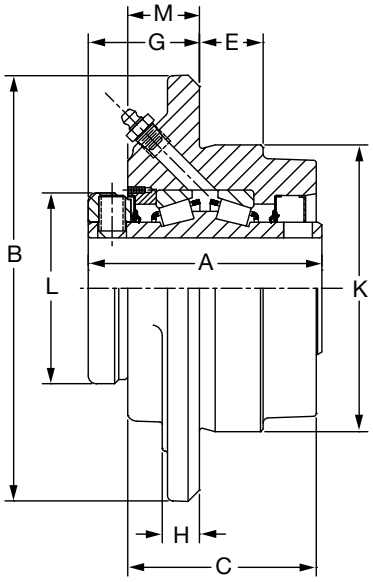

3-3/16" THRU 3-1/2"
CONSTRUCTION

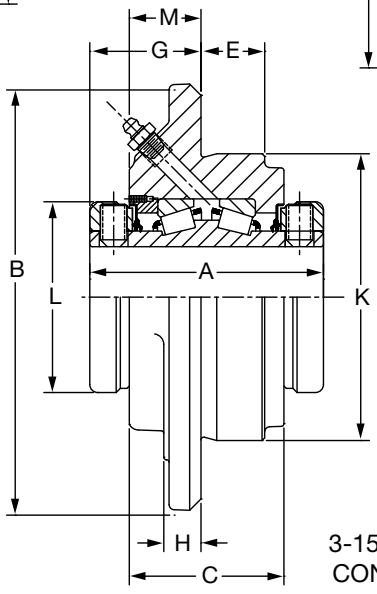

3-15/16" THRU 5"
CONSTRUCTION

FEATURES/BENEFITS PAGE B10-2	HOW TO ORDER/NOMENCLATURE PAGE B10-9	EASY SELECTION PAGE B10-15	ACCESSORIES PAGE B10-64



Type E-Xtra Piloted Flange

Gray Iron			
Shaft Size Inches #	**Part Number**	**Part Name**	**Weight Lbs (Approx)**
1-3/16	**023120**	FC-E-103R	5
1-1/4	**023121**	FC-E-104R	5
1-3/8	**023122**	FC-E-106R	7
1-7/16	**023123**	FC-E-107R	6
1-1/2	**023124**	FC-E-108R	10
1-5/8	**023125**	FC-E-110R	9
1-11/16	**023126**	FC-E-111R	9
1-3/4	**023127**	FC-E-112R	11
1-7/8	**023128**	FC-E-114R	10
1-15/16	**023129**	FC-E-115R	10
2	**023130**	FC-E-200R	10
2-3/16	**023131**	FC-E-203R	14
2-1/4	**023132**	FC-E-204R	18
2-7/16	**023133**	FC-E-207R	18
2-1/2	**023134**	FC-E-208R	17
2-11/16	**023135**	FC-E-211R	27
2-3/4	**023136**	FC-E-212R	27
2-15/16	**023137**	FC-E-215R	25
3	**023138**	FC-E-300R	25
3-3/16	**023139**	FC-E-303R	44
3-1/4	**023140**	FC-E-304R	44
3-7/16	**023141**	FC-E-307R	43
3-1/2	**023142**	FC-E-308R	42
3-15/16	**023143**	FC-E-315R	59
4	**023144**	FC-E-400R	58
4-7/16 ##	**023145**	FC-E-407R	110
4-1/2 ##	**023146**	FC-E-408R	110
4-15/16 ##	**023147**	FC-E-415R	130
5 ##	**023148**	FC-E-500R	130

Consult DODGE For Sizes Not Listed.

Shaft Size Inches	**A**	**B**	**C**	**D**	**ØDD**	**E**	**F Bolt#**	**G**	**H**	**K****	**L**	**M**
1-3/16 1-1/4	2.75	5.00	2.22	2.92	4.13	0.75	3/8	1.31	0.44	3.38	2.25	0.84
1-3/8 1-7/16	3.00	5.25	2.47	3.09	4.38	0.88	3/8	1.50	0.50	3.63	2.75	1.03
1-1/2 1-5/8 1-11/16	3.38	6.13	2.39	3.62	5.13	1.06	7/16	1.56	0.50	4.25	3.19	1.03
1-3/4 1-7/8 1-15/16 2	3.50	6.38	2.91	3.80	5.38	1.19	7/16	1.56	0.56	4.50	3.44	1.03
2-3/16	3.75	7.13	3.09	4.24	6.00	1.19	1/2	1.69	0.56	5.00	3.75	1.09
2-1/4 2-7/16 2-1/2	4.00	7.63	3.31	4.60	6.50	1.31	1/2	1.81	0.63	5.50	4.06	1.19
2-11/16 2-3/4 2-15/16 3	4.50	8.75	3.69	5.30	7.50	1.50	5/8	2.00	0.75	6.38	4.72	1.25
3-3/16 3-1/4 3-7/16 3-1/2	5.00	10.25	4.19	6.10	8.63	1.25	3/4	2.44	0.94	7.38	5.50	1.69
3-15/16 4	6.25	10.88	4.50	6.63	9.38	1.50	3/4	2.69	1.00	8.13	6.00	1.81
4-7/16 4-1/2	6.75	13.50	4.63	##	11.75	1.50	3/4##	3.00	1.00	10.25	6.45	1.94
4-15/16 5	7.25	14.75	5.06	##	12.75	1.75	7/8##	2.97	1.25	11.00	7.45	1.88

* 1-3/16 To 3-1/2 - One Collar
3-15/16 To 5, - Two Collars

(6) BOLTS EQUALLY SPACED
** +.000 -.002

NOTE: All sizes use a 1/8-27 NPT hydraulic grease fitting

FEATURES/BENEFITS PAGE B10-2	HOW TO ORDER/NOMENCLATURE PAGE B10-9	EASY SELECTION PAGE B10-15	ACCESSORIES PAGE B10-64

SELECTION/DIMENSIONS

Type E-Xtra Wide Slot Take-Up Unit

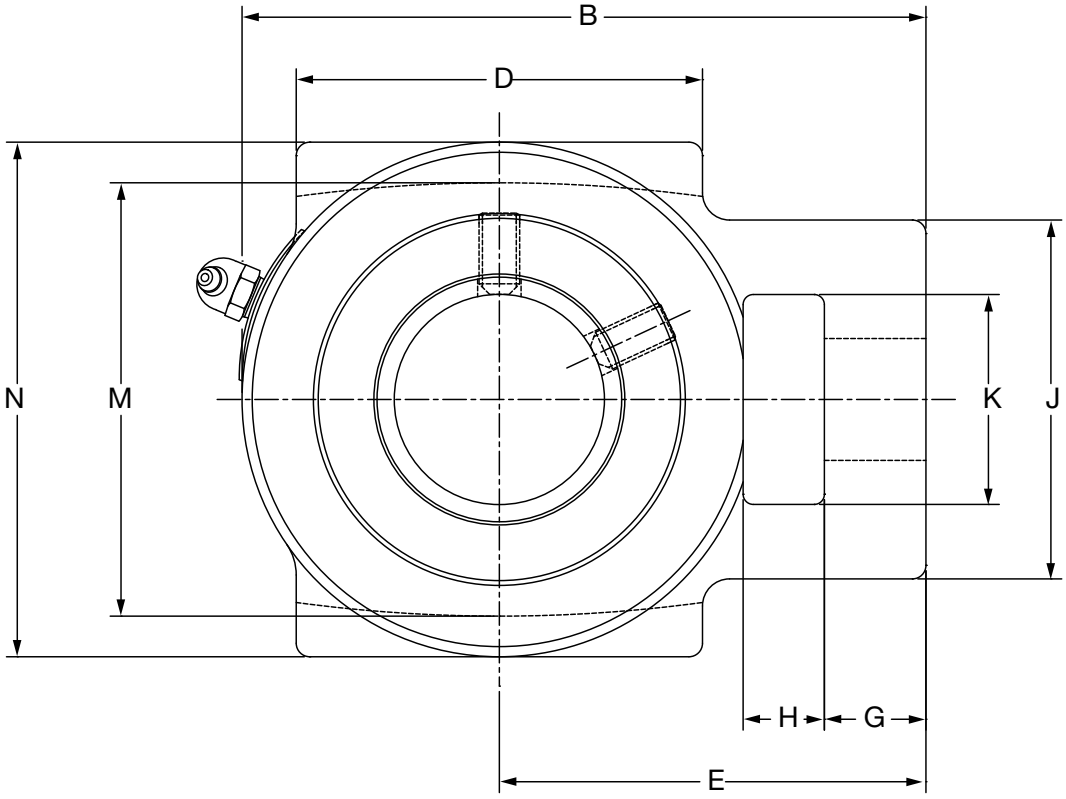

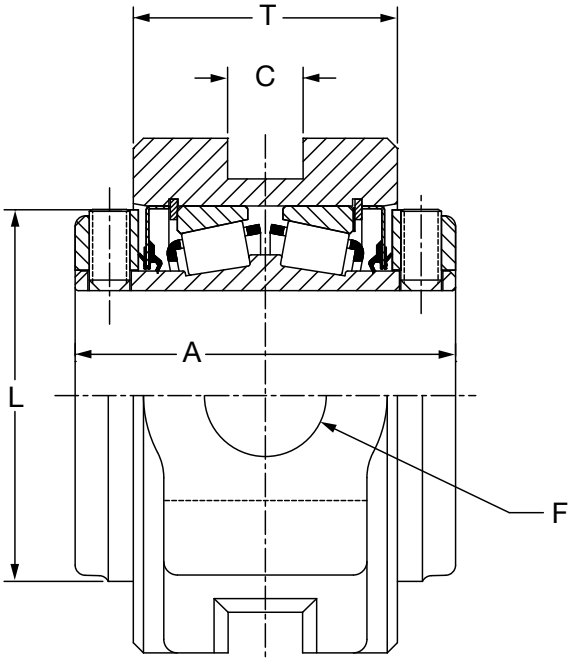

1-3/8” THRU 3” CONSTRUCTION

FEATURES/BENEFITS PAGE B10-2	HOW TO ORDER/NOMENCLATURE PAGE B10-9	EASY SELECTION PAGE B10-15	ACCESSORIES PAGE B10-64



Type E-Xtra Wide Slot Take-Up Unit

Gray Iron				
Shaft Size # Inches	**Part Number**	**Part Name**	**Weight Lbs (Approx)**	**Frame Δ**
1-3/8	**023076**	WSTU-E-106R	8	CP308
1-7/16	**023077**	WSTU-E-107R	8	
1-1/2	**023078**	WSTU-E-108R	10	CP400
1-5/8	**023079**	WSTU-E-110R	10	
1-11/16	**023080**	WSTU-E-111R	10	
1-3/4	**023081**	WSTU-E-112R	12	CP400
1-7/8	**023082**	WSTU-E-114R	12	
1-15/16	**023083**	WSTU-E-115R	12	
2	**023084**	WSTU-E-200R	12	
2-3/16	**023085**	WSTU-E-203R	16	CP408
2-1/4	**023086**	WSTU-E-204R	21	CP502
2-7/16	**023087**	WSTU-E-207R	21	
2-1/2	**023088**	WSTU-E-208R	21	
2-11/16	**023089**	WSTU-E-211R	30	CP515
2-3/4	**023090**	WSTU-E-212R	30	
2-15/16	**023091**	WSTU-E-215R	30	
3	**023092**	WSTU-E-300R	30	

Consult DODGE For Sizes Not Listed.

Δ See page B15-20 for CP Take-Up Frame

Shaft Size Inches	**A**	**B**	**C**	**D**	**E**	**F Screw Dia**	**G**	**H**	**J**	**K**	**L**	**M**	**N**	**T**
1-3/8 1-7/16	3.00	5.09	0.53	2.75	3.22	3/4	0.69	0.63	2.44	1.44	2.75	3.50	4.13	2.06
1-1/2 1-5/8 1-11/16	3.38	6.00	0.69	3.25	3.81	1	0.94	0.75	3.31	1.94	3.79	4.00	4.75	2.31
1-3/4 1-7/8 1-15/16 2	3.50	6.31	0.69	3.75	3.94	1	0.94	0.75	3.31	1.94	3.44	4.00	4.75	2.44
2-3/16	3.75	7.13	0.81	3.75	4.63	1-1/8	1.00	1.25	3.88	2.25	3.75	4.50	5.25	2.56
2-1/4 2-7/16 2-1/2	4.00	7.81	1.06	4.50	5.06	1-1/4	1.06	1.25	4.25	2.50	4.06	5.13	6.00	2.75
2-11/16 2-3/4 2-15/16 3	4.50	9.13	1.81	4.75	5.88	1-1/2	1.13	1.50	4.88	2.75	4.72	5.94	6.75	3.00

NOTE: All sizes use a 1/8-27 NPT hydraulic grease fitting

Bearing Reference Guide
E-Family Roller Bearings
Specialty Tapered Products
S-2000
UNISPHERE II
IMPERIAL
UNIFIED SAF

SELECTION/DIMENSIONS

Type E-Xtra TP Take-Up Bearing - Inch

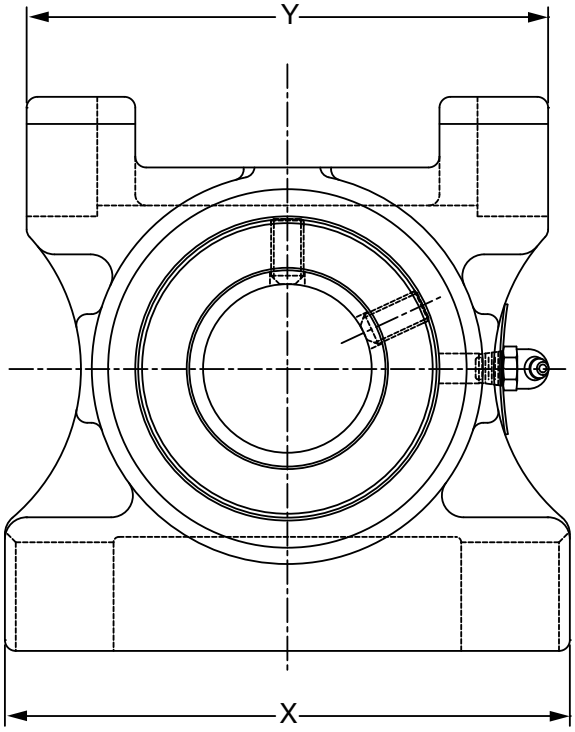

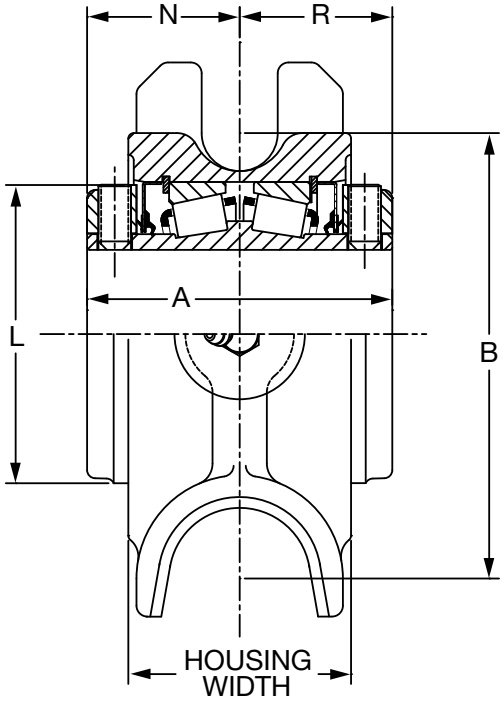

1-3/4” THRU 3” CONSTRUCTION

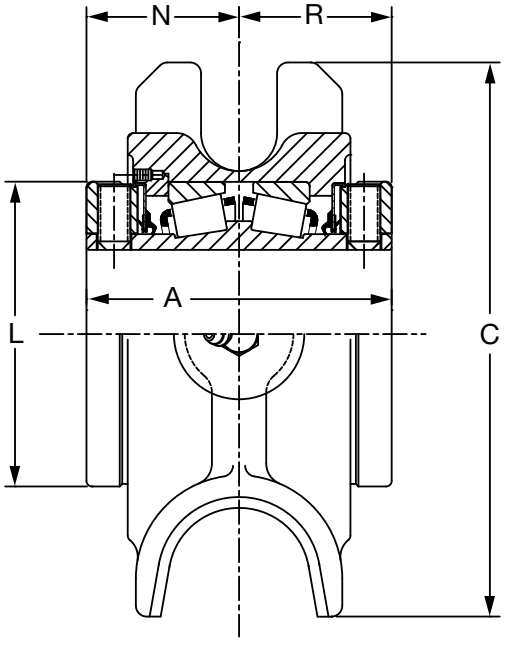

3-3/16” THRU 4” CONSTRUCTION

FEATURES/BENEFITS PAGE B10-2	HOW TO ORDER/NOMENCLATURE PAGE B10-9	EASY SELECTION PAGE B10-15	ACCESSORIES PAGE B10-64



Type E-Xtra TP Take-Up Bearing - Inch

Gray Iron				
Shaft Size Inches #	**Part Number**	**Part Name**	**Weight Lbs (Approx)**	**Frame Size Ref.**
1-3/4	**023149**	TP-E-112R	14	TP10
1-7/8	**023150**	TP-E-114R	14	TP10
1-15/16	**023151**	TP-E-115R	14	TP10
2	**023152**	TP-E-200R	14	TP10
2-3/16	**023153**	TP-E-203R	16	TP20
2-1/4	**023154**	TP-E-204R	21	TP30
2-7/16	**023155**	TP-E-207R	21	TP30
2-1/2	**023156**	TP-E-208R	21	TP30
2-11/16	**023157**	TP-E-211R	29	TP40
2-3/4	**023158**	TP-E-212R	29	TP40
2-15/16	**023159**	TP-E-215R	29	TP40
3	**023160**	TP-E-300R	29	TP40
3-3/16	**023161**	TP-E-303R	43	TP50
3-1/4	**023162**	TP-E-304R	43	TP50
3-7/16	**023163**	TP-E-307R	42	TP50
3-1/2	**023164**	TP-E-308R	42	TP50
3-15/16	**023165**	TP-E-315R	62	TP60
4	**023166**	TP-E-400R	62	TP60

Consult DODGE For Sizes Not Listed.

Shaft Size	A	B	C	L	N	Housing Width	X	Y
1-3/4 1-7/8 1-15/16 2	3.50	5.19	6.38	3.44	1.75	2.56	6.50	6.00
2 -3/16	3.75	5.81	6.88	3.75	1.88	2.56	6.75	7.00
2 -1/4 2 -7/16 2 -1/2	4.00	6.25	7.44	4.06	2.00	3.00	7.50	7.00
2-11/16 2 -3/4 2-15/16 3	4.50	7.19	8.31	4.72	2.25	3.00	850	8.00
3-3/16 3-1/4 3-7/16 3-1/2	5 .00	8.31	9.63	5.50	2.50	3.75	9.50	9.00
3-15/16 4	6.25	9.06	11.00	6.00	3.13	4.75	11.00	10.50

NOTE: All sizes use a 1/8-27 NPT hydraulic grease fitting

Bearing Reference Guide
E-Family Roller Bearings
Specialty Tapered Products
S-2000
UNISPHERE II
IMPERIAL
UNIFIED SAF

SELECTION/DIMENSIONS

Type EXL Pillow Block
2-Bolt Base

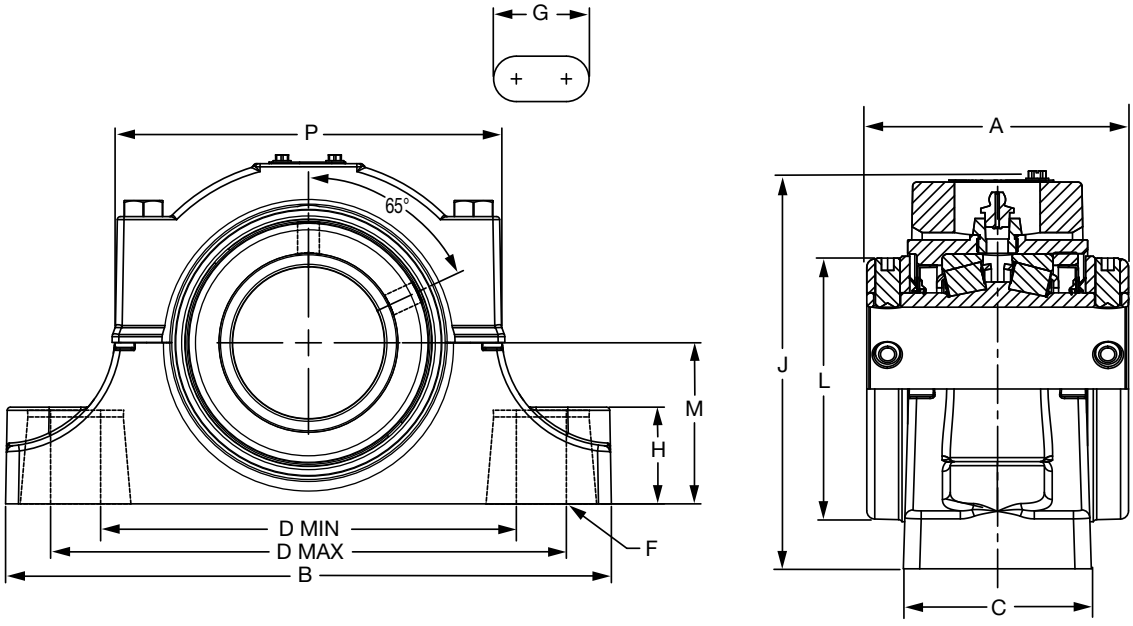

Shaft Size	Non-Expansion Part No.	Part Name	Expansion Part No.	Part Name
1-3/16	**077221**	P2B-EXL-103R	**077244**	P2B-EXL-103RE
1-1/4	**077222**	P2B-EXL-104R	**077245**	P2B-EXL-104RE
1-3/8	**077223**	P2B-EXL-106R	**077246**	P2B-EXL-106RE
1-7/16	**077224**	P2B-EXL-107R	**077247**	P2B-EXL-107RE
1-1/2	**077225**	P2B-EXL-108R	**077248**	P2B-EXL-108RE
1-5/8	**077226**	P2B-EXL-110R	**077249**	P2B-EXL-110RE
1-11/16	**077227**	P2B-EXL-111R	**077250**	P2B-EXL-111RE
1-3/4	**077228**	P2B-EXL-112R	**077251**	P2B-EXL-112RE
1-7/8	**077229**	P2B-EXL-114R	**077252**	P2B-EXL-114RE
1-15/16	**077230**	P2B-EXL-115R	**077253**	P2B-EXL-115RE
2	**077231**	P2B-EXL-200R	**077254**	P2B-EXL-200RE
2-3/16	**077232**	P2B-EXL-203R	**077255**	P2B-EXL-203RE
2-1/4	**077233**	P2B-EXL-204R	**077256**	P2B-EXL-204RE
2-7/16	**077234**	P2B-EXL-207R	**077257**	P2B-EXL-207RE
2-1/2	**077235**	P2B-EXL-208R	**077258**	P2B-EXL-208RE
2-11/16	**077236**	P2B-EXL-211R	**077259**	P2B-EXL-211RE
2-3/4	**077237**	P2B-EXL-212R	**077260**	P2B-EXL-212RE
2-15/16	**077238**	P2B-EXL-215R	**077261**	P2B-EXL-215RE
3	**077239**	P2B-EXL-300R	**077262**	P2B-EXL-300RE
3-3/16	**077240**	P2B-EXL-303R	**077263**	P2B-EXL-303RE
3-1/4	**077241**	P2B-EXL-304R	**077264**	P2B-EXL-304RE
3-7/16	**077242**	P2B-EXL-307R	**077265**	P2B-EXL-307RE
3-1/2	**077243**	P2B-EXL-308R	**077266**	P2B-EXL-308RE



Type EXL Pillow Block
2-Bolt Base

Shaft Size	Weight lbs (Approx)	A	B	C	D		F
					Min	Max	Bolt Dia.
1-3/16 1-1/4	10 10	2.75	6.25	1.88	4.56	4.94	1/2
1-3/8 1-7/16	12 12	3.00	7.25	2.19	5.31	5.94	1/2
1-1/2 1-5/8 1-11/16	12 15 15	3.38	7.75	2.37	5.56	6.44	1/2
1-3/4 1-7/8 1-15/16 2	15 19 19 19	3.50	8.88	2.54	6.31	7.19	5/8
2-3/16	24	3.75	9.62	2.65	6.69	7.94	5/8
2-1/4 2-7/16 2-1/2	24 29 29	4.00	10.38	2.88	6.94	8.69	5/8
2-11/16 2-3/4 2-15/16 3	42 42 43 43	4.50	11.75	3.32	8.06	10.00	3/4
3-3/16 3-1/4 3-7/16 3-1/2	73 73 73 73	5.00	13.75	4.00	10.12	11.75	7/8

Shaft Size	Weight lbs (Approx)	G	H	J	L	M	P	EXP ✳
1-3/16 1-1/4	10 10	0.75	0.88	3.51	2.25	1.50	4.06	0.56
1-3/8 1-7/16	12 12	0.94	1.13	4.17	2.75	1.88	4.63	0.56
1-1/2 1-5/8 1-11/16	12 15 15	1.07	1.25	4.69	3.19	2.13	5.13	0.56
1-3/4 1-7/8 1-15/16 2	15 19 19 19	1.19	1.31	4.99	3.44	2.25	5.56	0.56
2-3/16	24	1.38	1.50	5.42	3.75	2.50	6.00	0.56
2-1/4 2-7/16 2-1/2	24 29 29	1.63	1.63	6.08	4.06	2.75	6.41	0.56
2-11/16 2-3/4 2-15/16 3	42 42 43 43	1.85	1.88	6.77	4.72	3.13	7.50	0.56
3-3/16 3-1/4 3-7/16 3-1/2	73 73 73 73	1.82	2.25	7.97	5.50	3.75	9.31	0.56

✳ EXP. Total Expansion Divided Equally On Both Sides Of Bearing (Expansion Bearing Only)

FEATURES/BENEFITS PAGE B10-2	HOW TO ORDER/NOMENCLATURE PAGE B10-9	EASY SELECTION PAGE B10-15	ACCESSORIES PAGE B10-64

SELECTION/DIMENSIONS

Type EXL Pillow Block
4-Bolt Base

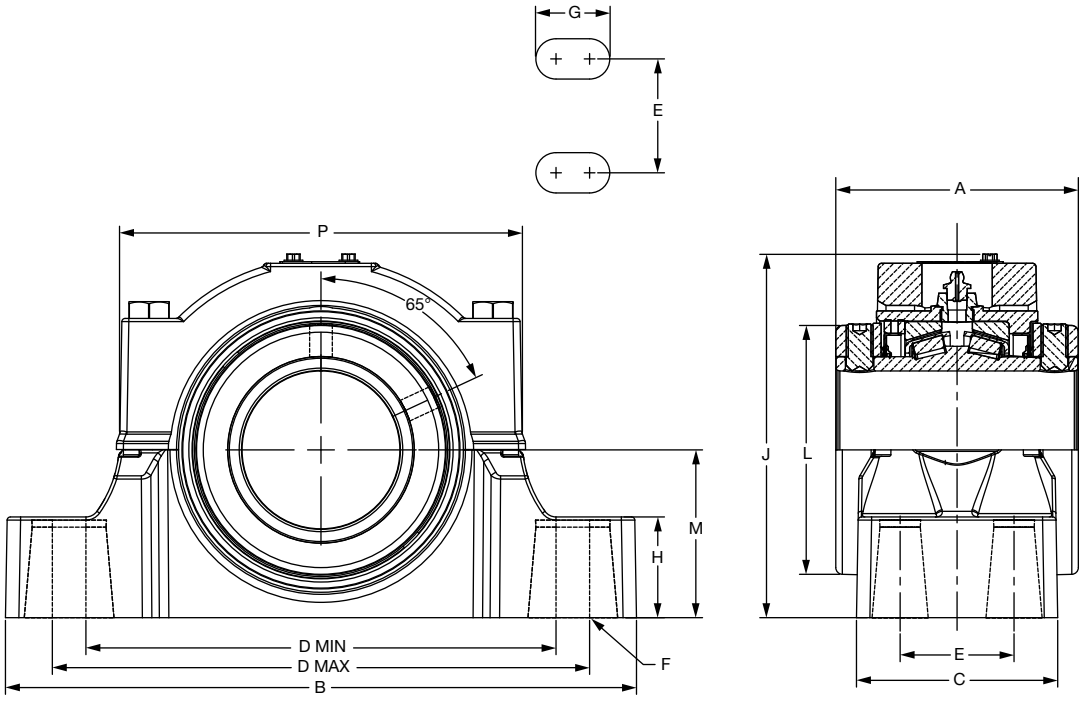

Shaft Size	Non-Expansion Part No.	Part Name	Expansion Part No.	Part Name
2-1/4	**077267**	P4B-EXL-204R	**077284**	P4B-EXL-204RE
2-7/16	**077268**	P4B-EXL207R	**077285**	P4B-EXL-207RE
2-1/2	**077269**	P4B-EXL-208R	**077286**	P4B-EXL-208RE
2-11/16	**077270**	P4B-EXL-211R	**077287**	P4B-EXL-211RE
2-3/4	**077271**	P4B-EXL-212R	**077288**	P4B-EXL-212RE
2-15/16	**077272**	P4B-EXL-215R	**077289**	P4B-EXL-215RE
3	**077273**	P4B-EXL-300R	**077290**	P4B-EXL-300RE
3-3/16	**077274**	P4B-EXL-303R	**077291**	P4B-EXL-303RE
3-1/4	**077275**	P4B-EXL-304R	**077292**	P4B-EXL-304RE
3-7/16	**077276**	P4B-EXL-307R	**077293**	P4B-EXL-307RE
3-1/2	**077277**	P4B-EXL-308R	**077294**	P4B-EXL-308RE
3-15/16	**077278**	P4B-EXL-315R	**077295**	P4B-EXL-315RE
4	**077279**	P4B-EXL-400R	**077296**	P4B-EXL-400RE
4-7/16	**077280**	P4B-EXL-407R	**077297**	P4B-EXL-407RE
4-1/2	**077281**	P4B-EXL-408R	**077298**	P4B-EXL-408RE
4-15/16	**077282**	P4B-EXL-415R	**077299**	P4B-EXL-415RE
5	**077283**	P4B-EXL-500R	**077300**	P4B-EXL-500RE



Type EXL Pillow Block
4-Bolt Base

Shaft Size	Weight lbs (Approx.)	A	B	C	D		E	F Bolts Dia.
					Min	Max		
2-1/4 2-7/16 2-1/2	29 29 29	4.00	10.38	3.50	7.75	8.25	1.88	5/8
2-11/16 2-3/4 2-15/16 3	42 42 42 42	4.50	11.75	3.75	8.75	10.00	2.12	5/8
3-3/16 3-1/4 3-7/16 3-1/2	73 73 73 73	5.00	13.75	4.50	10.56	11.75	2.38	3/4
3-15/16 4	109 109	6.25	15.25	4.74	11.00	13.00	2.25	3/4
4-7/16 4-1/2	154 154	6.75	16.50	5.08	12.00	13.88	2.50	3/4
4-15/16 5	192 192	7.25	18.50	5.66	13.50	15.88	2.88	3/4

Shaft Size	Weight lbs (Approx.)	G	H	J	L	M	P	EXP ✳
2-1/4 2-7/16 2-1/2	29 29 29	1.25	1.63	6.08	4.06	2.75	6.41	0.56
2-11/16 2-3/4 2-15/16 3	42 42 42 42	1.38	1.88	6.77	4.72	3.13	7.50	0.56
3-3/16 3-1/4 3-7/16 3-1/2	73 73 73 73	1.48	2.25	7.97	5.50	3.75	9.31	0.56
3-15/16 4	109 109	1.88	2.44	8.81	6.00	4.25	10.08	0.56
4-7/16 4-1/2	154 154	1.82	2.75	9.79	6.45	4.75	11.08	0.56
4-15/16 5	192 192	2.23	3.00	11.36	7.25	5.50	12.71	0.56

✳ EXP - Total Expansion Divided Equally On Both Sides Of Bearing (Expansion Bearings Only)

Bearing Reference Guide
E-Family Roller Bearings
Specialty Tapered Products
S-2000
UNISPHERE II
IMPERIAL
UNIFIED SAF

SELECTION/DIMENSIONS

Type EXL S-1 UNIT

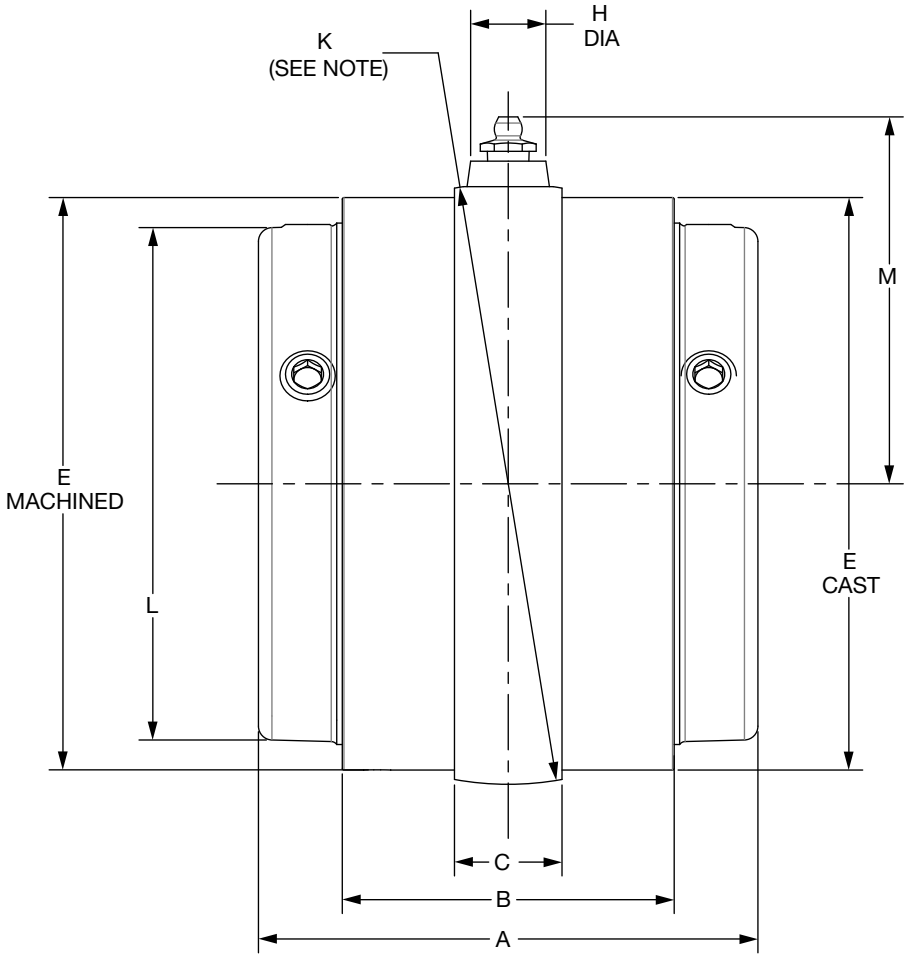



Type EXL S-1 UNIT

Shaft Size	Part Number	Part Name	Weight lbs (Approx.)	A	B	C	E	K *	L	M
1-3/16	**077192**	S1U-EXL-103R	3	2.75	1.88	0.56	2.51	2.6370	2.25	1.66
1-1/4	**077193**	S1U-EXL-104R	3							
1-3/8	**077194**	S1U-EXL-106R	4	3.00	2.06	0.62	3.03	3.2000	2.75	1.94
1-7/16	**077195**	S1U-EXL-107R	4							
1-1/2	**077196**	S1U-EXL-108R	4	3.38	2.31	0.75	3.49	3.6920	3.19	2.19
1-5/8	**077197**	S1U-EXL-110R	6							
1-11/16	**077198**	S1U-EXL-111R	6							
1-3/4	**077199**	S1U-EXL-112R	6	3.50	2.44	0.82	3.75	3.9650	3.44	2.38
1-7/8	**077200**	S1U-EXL-114R	6							
1-15/16	**077201**	S1U-EXL-115R	7							
2	**077202**	S1U-EXL-200R	7							
2-3/16	**077203**	S1U-EXL-203R	9	3.75	2.56	0.84	4.22	4.4380	3.75	2.61
2-1/4	**077204**	S1U-EXL-204R	11	4.00	2.75	0.85	4.56	4.7810	4.06	3.04
2-7/16	**077205**	S1U-EXL-207R	11							
2-1/2	**077206**	S1U-EXL-208R	11							
2-11/16	**077207**	S1U-EXL-211R	16	4.50	3.00	0.98	5.17	5.4325	4.72	3.37
2-3/4	**077208**	S1U-EXL-212R	16							
2-15/16	**077209**	S1U-EXL-215R	16							
3	**077210**	S1U-EXL-300R	16							
3-3/16	**077211**	S1U-EXL-303R	30	5.00	3.50	1.12	6.30	6.5940	5.50	3.95
3-1/4	**077212**	S1U-EXL-304R	30							
3-7/16	**077213**	S1U-EXL-307R	30							
3-1/2	**077214**	S1U-EXL-308R	30							
3-15/16	**077215**	S1U-EXL-315R	42	6.25	4.50	1.56	6.84	7.2640	6.00	4.28
4	**077216**	S1U-EXL-400R	42							
4-7/16	**077217**	S1U-EXL-407R	56	6.75	4.63	1.63	7.56	8.0000	6.45	4.65
4-1/2	**077218**	S1U-EXL-408R	56							
4-15/16	**077219**	S1U-EXL-415R	81	7.25	5.13	1.87	8.79	9.2900	7.25	5.30
5	**077220**	S1U-EXL-500R	81							

* ±.0005

SELECTION/DIMENSIONS

Type K Pillow Block
2 & 4 BOLT BASE - INCH*

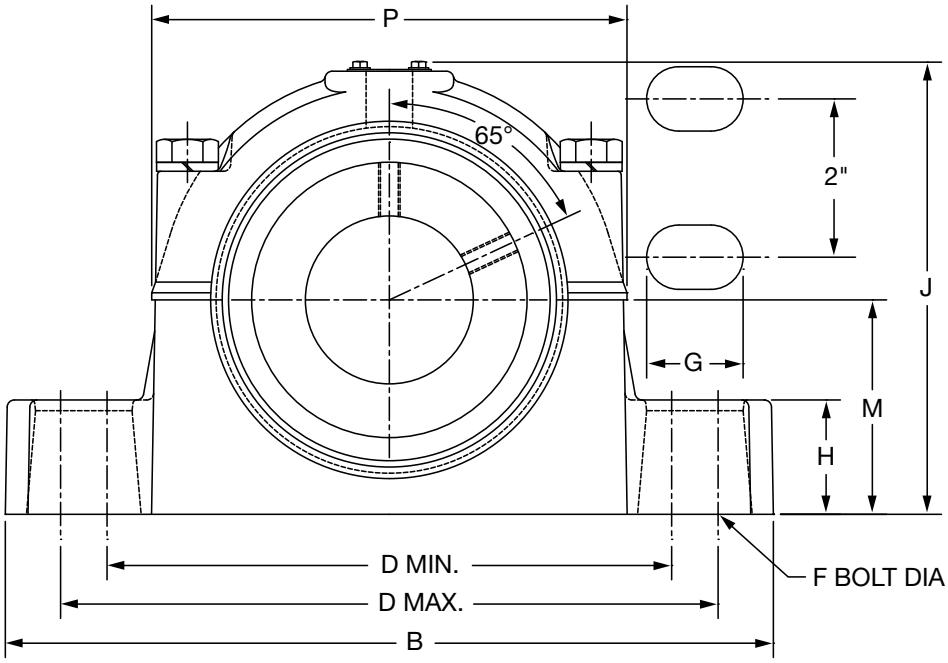

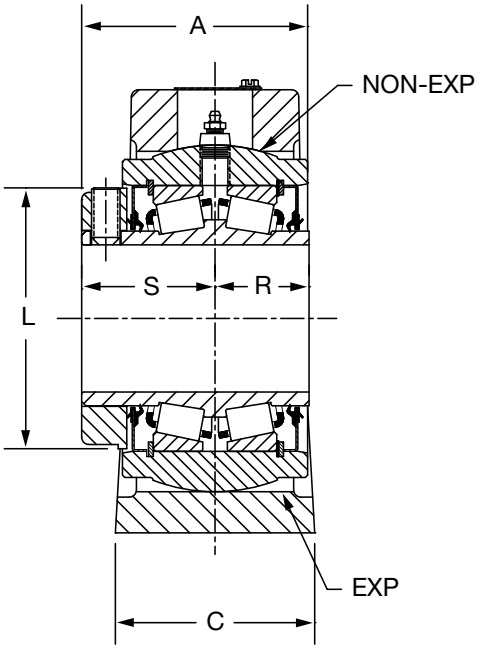

1-3/16” THRU 3” CONSTRUCTION

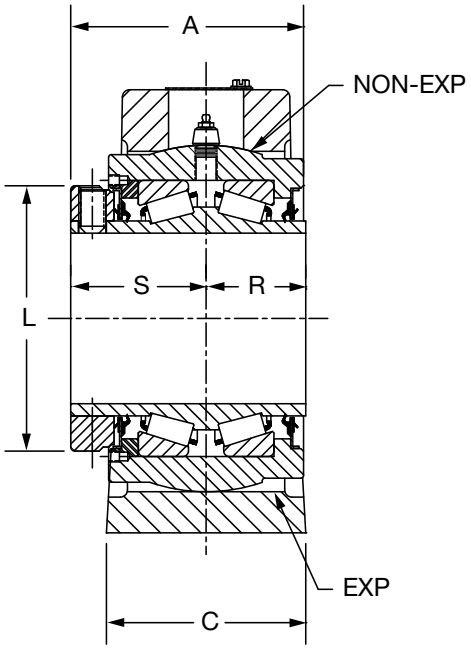

3-3/16” THRU 3-15/16” CONSTRUCTION

1-13/16” THRU 3-1/2“ (2 BOLT BASE)
3-15/16” (4 BOLT BASE)

SELECTION/DIMENSIONS

DODGE



Type K Pillow Block
2 & 4 BOLT BASE - INCH*

Gray Iron Non-Expansion				Gray Iron Expansion			
Shaft Size Inches #	Part Number	Part Name	Weight Lbs (Approx)	Shaft Size Inches #	Part Number	Part Name	Weight Lbs (Approx)
1-3/16	**023167**	P2B-K-103R	9	1-3/16	**023189**	P2B-K-103RE	9
1-1/4	**023168**	P2B-K-104R	9	1-1/4	**023190**	P2B-K-104RE	9
1-7/16	**023170**	P2B-K-107R	11	1-7/16	**023192**	P2B-K-107RE	11
1-1/2	**023171**	P2B-K-108R	15	1-1/2	**023193**	P2B-K-108RE	15
1-5/8	**023172**	P2B-K-110R	14	1-5/8	**023194**	P2B-K-110RE	14
1-11/16	**023173**	P2B-K-111R	14	1-11/16	**023195**	P2B-K-111RE	14
1-3/4	**023174**	P2B-K-112R	20	1-3/4	**023196**	P2B-K-112RE	20
1-15/16	**023175**	P2B-K-115R	19	1-15/16	**023197**	P2B-K-115RE	19
2	**023176**	P2B-K-200R	19	2	**023198**	P2B-K-200RE	19
2-3/16	**023177**	P2B-K-203R	24	2-3/16	**023199**	P2B-K-203RE	24
2-1/4	**023178**	P2B-K-204R	28	2-1/4	**023200**	P2B-K-204RE	28
2-7/16	**023179**	P2B-K-207R	28	2-7/16	**023201**	P2B-K-207RE	28
2-1/2	**023180**	P2B-K-208R	28	2-1/2	**023200**	P2B-K-208RE	28
2-11/16	**023181**	P2B-K-211R	40	2-11/16	**023203**	P2B-K-211RE	40
2-3/4	**023182**	P2B-K-212R	40	2-3/4	**023204**	P2B-K-212RE	40
2-15/16	**023183**	P2B-K-215R	39	2-15/16	**023205**	P2B-K-215RE	39
3	**023184**	P2B-K-300R	39	3	**023206**	P2B-K-300RE	39
3-7/16	**023186**	P2B-K-307R	67	3-7/16	**023208**	P2B-K-307RE	67
3-1/2	**023187**	P2B-K-308R	66	3-1/2	**023209**	P2B-K-308RE	66
3-15/16 ▲	**023188**	P4B-K-315R	106	3-15/16 ▲	**023210**	P4B-K-315RE	106

Non-Expansion Furnished Unless Otherwise Specified

Consult DODGE For Sizes Not Listed

Consult DODGE For Sizes Not Listed

Shaft Size Inches	A	B	C	D		F Bolt Dia	G	H	J	L	M	P	R	S	Exp*
				Min.	Max.										
1-3/16 1-1/4	2.28	7.50	1.88	6.00	6.38	3/8	0.69	1.00	4.53	2.25	2.13	5.00	1.00	1.38	3/32
1-3/8 1-7/16	2.55	8.00	2.19	6.25	6.63	1/2	0.75	1.25	5.23	2.75	2.38	5.52	1.03	1.50	3/32
1-1/2 1-5/8 1-11/16	2.83	9.00	2.38	6.88	7.63	1/2	1.00	1.38	5.75	3.19	2.63	5.81	1.56	1.69	3/32
1-3/4 1-15/16 2	2.95	10.00	2.53	7.38	8.44	5/8	1.30	1.50	6.27	3.44	2.88	6.36	1.20	1.75	9/32
2-3/16	3.16	11.00	2.66	8.06	9.25	5/8	1.33	1.50	6.52	3.75	3.00	6.95	1.25	1.88	9/32
2-1/4 2-7/16 2-1/2	3.34	12.00	2.81	9.25	10.25	5/8	1.27	1.75	7.03	4.06	3.25	7.38	1.31	2.00	9/32
2-11/16 2-3/4 2-15/16 3	3.78	13.44	2.94	9.88	11.50	3/4	1.69	2.00	7.92	4.72	3.75	8.31	1.44	2.25	9/32
3-3/16 3-7/16 3-1/2	4.27	16.00	3.44	12.81	13.81	7/8	1.50	2.25	9.42	5.50	4.50	10.09	1.69	2.50	9/32
3-15/16▲	5.41	17.44	4.75	13.13	14.75	3/4	1.70	2.75	10.42	6.00	5.00	10.70	2.13	3.13	11/32

*Exp-Total Expansion Divided Equally On Both Sides Of Bearing (Expansion Bearings Only)

NOTE: All sizes use a 1/8-27 NPT hydraulic grease fitting

▲ 4-Bolt Base (See Page For Bolts Spacing)

Dowel Hole Locations For Precision Positioning - See Page -

FEATURES/BENEFITS PAGE B10-2	HOW TO ORDER/NOMENCLATURE PAGE B10-9	EASY SELECTION PAGE B10-15	ACCESSORIES PAGE B10-64

SELECTION/DIMENSIONS

Type K Flange Bearing - Inch

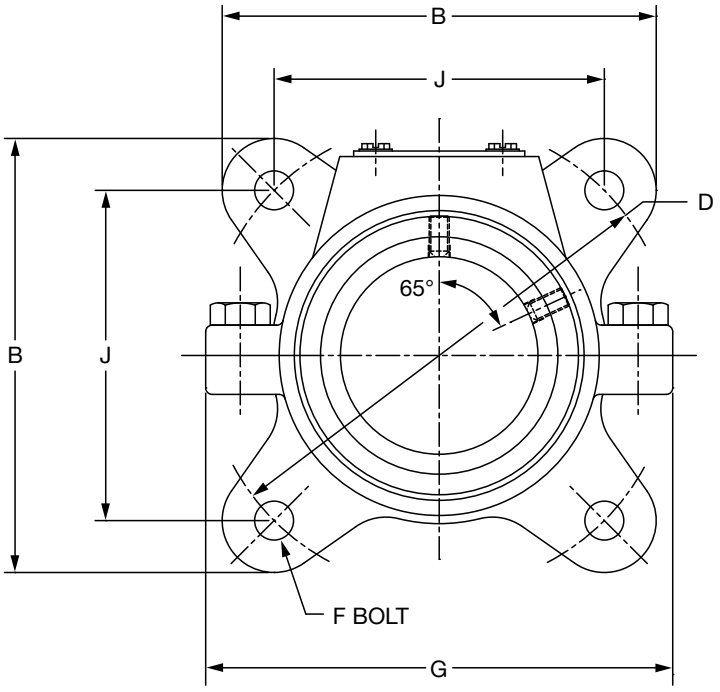

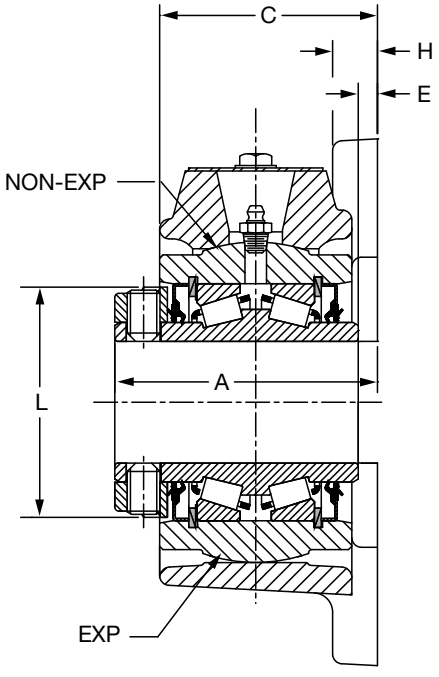

1-3/16" THRU 3" INTERNAL CONSTRUCTION

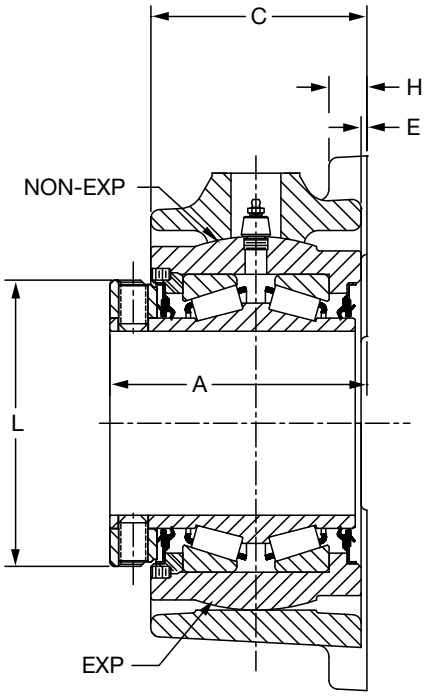

3-3/16" THRU 3-15/16" INTERNAL CONSTRUCTION



Type K Flange Bearing - Inch

DUCTILE Iron - Non-Expansion				DUCTILE Iron - Expansion			
Shaft Size Inches	**Part Number**	**Description**	**Weight Lbs (Approx)**	**Shaft Size Inches**	**Part Number**	**Description**	**Weight Lbs (Approx)**
1-3/16	**023211**	F4B-K-103R	6	1-3/16	**023233**	F4B-K-103RE	6
1-1/4	**023212**	F4B-K-104R	6	1-1/4	**023234**	F4B-K-104RE	6
1-3/8	**023213**	F4B-K-106R	7	1-3/8	**023235**	F4B-K-106RE	7
1-7/16	**023214**	F4B-K-107R	8	1-7/16	**023236**	F4B-K-107RE	8
1-1/2	**023215**	F4B-K-108R	12	1-1/2	**023237**	F4B-K-108RE	12
1-5/8	**023216**	F4B-K-110R	12	1-5/8	**023238**	F4B-K-110RE	12
1-11/16	**023217**	F4B-K-111R	12	1-11/16	**023239**	F4B-K-111RE	12
1-3/4	**023218**	F4B-K-112R	13	1-3/4	**023240**	F4B-K-112RE	13
1-15/16	**023219**	F4B-K-115R	15	1-15/16	**023241**	F4B-K-115RE	15
2	**023220**	F4B-K-200R	14	2	**023242**	F4B-K-200RE	14
2-3/16	**023221**	F4B-K-203R	17	2-3/16	**023243**	F4B-K-203RE	17
2-1/4	**023222**	F4B-K-204R	17	2-1/4	**023244**	F4B-K-204RE	17
2-7/16	**023223**	F4B-K-207R	20	2-7/16	**023245**	F4B-K-207RE	20
2-1/2	**023224**	F4B-K-208R	20	2-1/2	**023246**	F4B-K-208RE	20
2-11/16	**023225**	F4B-K-211R	24	2-11/16	**023247**	F4B-K-211RE	24
2-3/4	**023226**	F4B-K-212R	24	2-3/4	**023248**	F4B-K-212RE	24
2-15/16	**023227**	F4B-K-215R	29	2-15/16	**023249**	F4B-K-215RE	29
3	**023228**	F4B-K-300R	29	3	**023250**	F4B-K-300RE	29
3-3/16	**023229**	F4B-K-303R	45	3-3/16	**023251**	F4B-K-303RE	45
3-7/16	**023230**	F4B-K-307R	47	3-7/16	**023252**	F4B-K-307RE	47
3-1/2	**023231**	F4B-K-308R	45	3-1/2	**023253**	F4B-K-308RE	45
3-15/16	**023232**	F4B-K-315R	73	3-15/16	**023254**	F4B-K-315RE	73

Non-Expansion Furnished Unless Otherwise Specified

Shaft Size Inches	**A**	**B #**	**C #**	**D**	**E**	**F Bolt Dia.**	**G #**	**H #**	**J**	**L**	**Exp***
1-3/16 1-1/4	2.56	5.19	2.13	5.66	0.19	3/8	5.25	0.44	4.00	2.25	9/32
1-3/8 1-7/16	2.69	5.75	2.13	6.25	0.16	1/2	5.75	0.50	4.41	2.75	3/16
1-1/2 1-5/8 1-11/16	3.00	6.13	2.44	6.75	0.16	1/2	6.75	0.50	4.78	3.19	3/16
1-3/4 1-15/16 2	3.13	6.88	2.56	7.50	0.16	5/8	7.25	0.56	5.31	3.44	3/16
2-3/16	3.31	7.19	2.72	8.00	0.16	5/8	7.81	0.56	5.66	3.75	3/16
2-1/4 2-7/16 2-1/2	3.56	7.63	2.92	8.50	0.25	5/8	8.56	0.63	6.00	4.06	5/16
2-11/16 2-3/4 2-15/16 3	4.00	8.88	3.34	9.75	0.25	3/4	9.50	0.69	6.91	4.72	5/16
3-3/16 3-7/16 3-1/2	4.50	10.25	3.72	11.50	0.25	7/8	11.38	0.75	8.13	5.50	5/16
3-15/16	5.50	11.44	4.63	13.00	0.13	1	12.88	0.81	9.19	6.00	5/16

– These are as cast surfaces. Dimensions may fluctuate due to draft angles and pattern shifts.

Exp* – Total expansion divided equally on both sides of bearing (Expansion Bearings only)

NOTE: All sizes use a 1/8-27 NPT hydraulic grease fitting

FEATURES/BENEFITS PAGE B10-2	HOW TO ORDER/NOMENCLATURE PAGE B10-9	EASY SELECTION PAGE B10-15	ACCESSORIES PAGE B10-64

SELECTION/DIMENSIONS

Type K Units - Inch

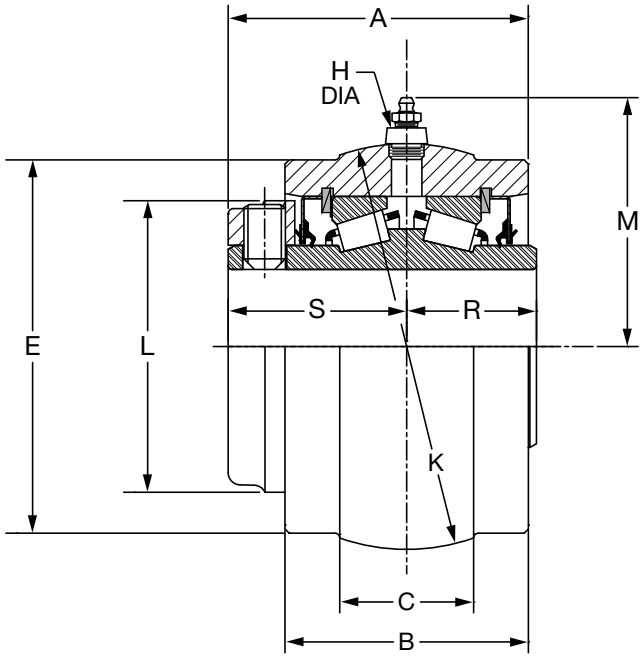

S-1 UNIT
1-3/16” THRU 3” CONSTRUCTION

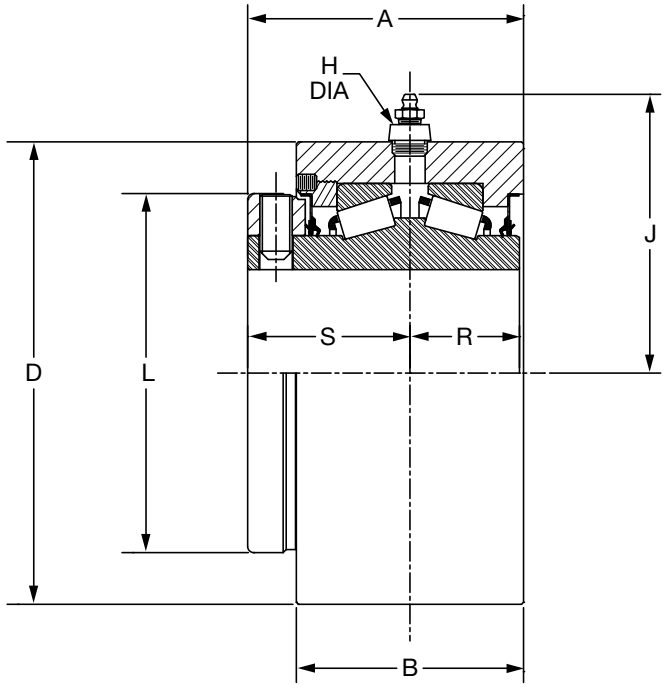

B-1 UNIT
3-3/16” THRU 3-15/16” CONSTRUCTION

DODGE



Type K Units - Inch

Type S-1 Units -- Gray Iron				Type B-1 Units -- Gray Iron			
Shaft Size Inches #	Part Number	Part Name	Weight Lbs (Approx)	Shaft Size Inches #	Part Number	Part Name	Weight Lbs (Approx)
1-3/16	**023271**	S1U-K-103R	3	1-3/16	------	B1U-K-103R	3
1-1/4	**023272**	S1U-K-104R	3	1-1/4	------	B1U-K-104R	3
1-3/8	**023273**	S1U-K-106R	4	1-3/8	**023293**	B1U-K-106R	4
1-7/16	**023274**	S1U-K-107R	4	1-7/16	**023294**	B1U-K-107R	4
1-1/2	**023275**	S1U-K-108R	5	1-1/2	**023295**	B1U-K-108R	5
1-5/8	**023276**	S1U-K-110R	5	1-5/8	**023296**	B1U-K-110R	5
1-11/16	**023277**	S1U-K-111R	5	1-11/16	**023297**	B1U-K-111R	5
1-3/4	**023278**	S1U-K-112R	7	1-3/4	**023298**	B1U-K-112R	7
1-15/16	**023279**	S1U-K-115R	7	1-15/16	**023299**	B1U-K-115R	7
2	**023280**	S1U-K-200R	7	2	**023300**	B1U-K-200R	7
2-3/16	**023281**	S1U-K-203R	9	2-3/16	**023301**	B1U-K-203R	9
2-1/4	**023282**	S1U-K-204R	11	2-1/4	**023302**	B1U-K-204R	11
2-7/16	**023283**	S1U-K-207R	11	2-7/16	**023303**	B1U-K-207R	11
2-1/2	**023284**	S1U-K-208R	11	2-1/2	**023304**	B1U-K-208R	11
2-11/16	**023285**	S1U-K-211R	15	2-11/16	**023305**	B1U-K-211R	15
2-3/4	**023286**	S1U-K-212R	15	2-3/4	**023306**	B1U-K-212R	15
2-15/16	**023287**	S1U-K-215R	15	2-15/16	**023307**	B1U-K-215R	15
3	**023288**	S1U-K-300R	15	3	**023308**	B1U-K-300R	15
3-3/16	**023289**	S1U-K-303R	28	3-3/16	**023309**	B1U-K-303R	28
3-7/16	**023290**	S1U-K-307R	28	3-7/16	**023310**	B1U-K-307R	28
3-1/2	**023291**	S1U-K-308R	28	3-1/2	**023311**	B1U-K-308R	28
3-15/16	**023292**	S1U-K-315R	40	3-15/16	**023312**	B1U-K-315R	40

Consult DODGE For Sizes Not Listed.

Consult DODGE For Sizes Not Listed.

Shaft Size Inches	A	B	C	D *	E%		H	J	K **	L	M	R	S
					Machine Side	Cast Side							
1-3/16 1-1/4	2.31	1.88	1.03	----	2.81	3.13	0.44	----	3.125	2.25	2.03	1.00	1.38
1-3/8 1-7/16	2.53	2.06	1.16	3.438	3.25	3.31	0.69	2.63	3.625	2.75	2.63	1.03	1.50
1-1/2 1-5/8 1-11/16	2.84	2.31	1.19	3.948	3.75	3.81	0.69	2.88	4.125	3.19	2.81	1.16	1.69
1-3/4 1-15/16 2	2.97	2.44	1.50	4.250	4.13	4.19	0.69	3.00	4.562	3.44	3.06	1.20	1.75
2-3/16	3.16	2.56	1.56	4.625	4.50	4.56	0.69	3.25	5.000	3.75	3.25	1.25	1.88
2-1/4 2-7/16 2-1/2	3.38	2.75	1.44	5.000	4.81	4.88	0.69	3.44	5.186	4.06	3.38	1.31	2.00
2-11/16 2-3/4 2-15/16 3	3.75	3.00	1.88	5.875	5.56	5.63	0.69	3.88	6.061	4.72	3.81	1.44	2.25
3-3/16 3-7/16 3-1/2	4.25	3.50	2.00	7.125	6.81	6.88	0.69	4.50	7.373	5.50	4.50	1.69	2.50
3-15/16	5.38	4.50	2.38	7.875	7.44	7.50	0.94	5.50	7.997	6.00	5.16	2.13	3.13

* +.000 -.002,"

** +.000 -.001 Sizes 1-3/16 THRU 3,"
±.0005, Sizes 3-3/16 THRU 3-15/16,"

% Machined side of unit is on collar side only.

NOTE: All sizes use a 1/8-27 NPT hydraulic grease fitting

ALL DIMENSIONS SHOWN IN Inches

FEATURES/BENEFITS PAGE B10-2	HOW TO ORDER/NOMENCLATURE PAGE B10-9	EASY SELECTION PAGE B10-15	ACCESSORIES PAGE B10-64

SELECTION/DIMENSIONS

Type K Wide Slot Take-Up Unit - Inch

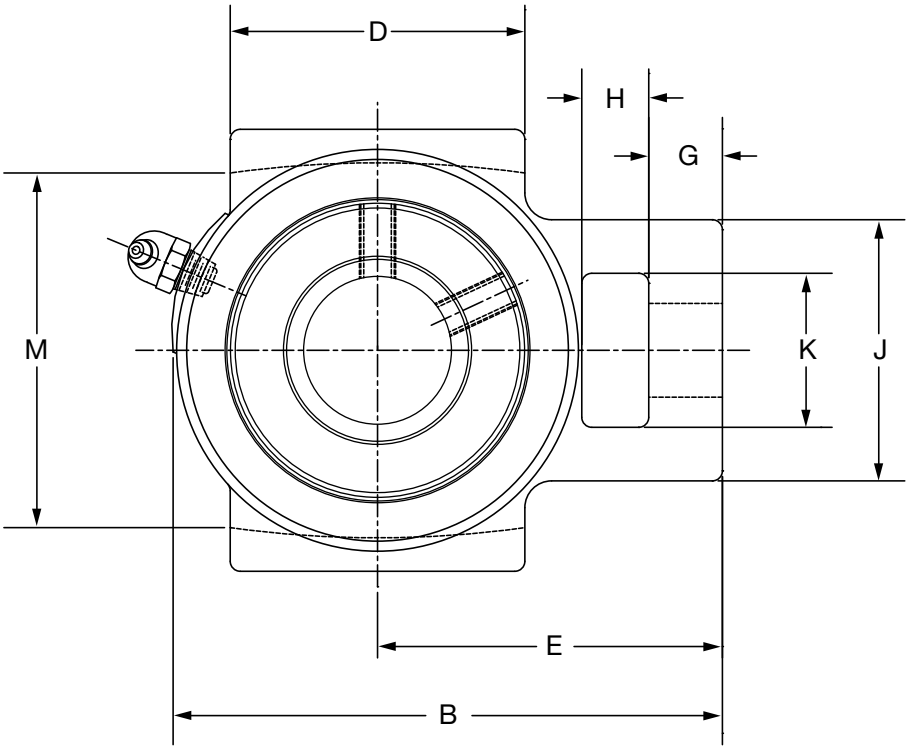

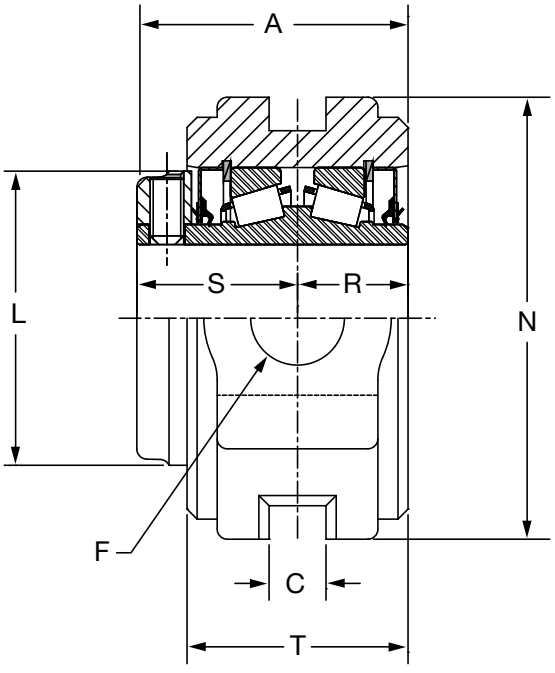

1-3/8” THRU 3” CONSTRUCTION

FEATURES/BENEFITS PAGE B10-2	HOW TO ORDER/NOMENCLATURE PAGE B10-9	EASY SELECTION PAGE B10-15	ACCESSORIES PAGE B10-64



Type K Wide Slot Take-Up Unit - Inch

Gray Iron				
Shaft Size Inches #	**Part Number**	**Part Name**	**Weight Lbs (Approx)**	**CP FRAME Size**
1-7/16	**023256**	WSTU-K-107R	8	CP308
1-15/16	**023261**	WSTU-K-115R	11	CP400
2-3/16	**023263**	WSTU-K-203R	15	CP408
2-7/16	**023265**	WSTU-K-207R	20	CP502
2-1/2	**023266**	WSTU-K-208R	20	
2-15/16	**023269**	WSTU-K-215R	28	CP515
3	**023270**	WSTU-K-300R	28	

Consult DODGE For Sizes Not Listed.

Shaft Size Inches	**A**	**B**	**C**	**D**	**E**	**F Screw Dia**	**G**	**H**	**J**	**K**	**L**	**M**	**N**	**R**	**S**	**T**
1-7/16	2.53	5.09	0.53	2.75	3.22	3/4	0.69	0.63	2.44	1.44	2.75	3.50	4.13	1.03	1.50	2.06
1-15/16	2.97	6.31	0.69	3.75	3.94	1	0.94	0.75	3.31	1.94	3.44	4.00	4.75	1.20	1.75	2.44
2-3/16	3.16	7.13	0.81	3.75	4.63	1-1/8	1.00	1.25	3.88	2.25	3.75	4.50	5.25	1.25	1.88	2.56
2-7/16 2-1/2	3.38	7.891	1.06	4.50	5.06	1-1/2	1.06	1.25	4.25	2.50	4.06	5.13	6.00	1.31	2.00	2.75
2-15/16 3	3.75	9.13	1.81	4.75	5.88	1-1/2	1.38	1.50	4.88	2.75	4.72	5.94	6.75	1.44	2.25	3.00

NOTE: All sizes use a 1/8-27 NPT hydraulic grease fitting

SELECTION/DIMENSIONS

Type K TP Take-Up Bearing - Inch

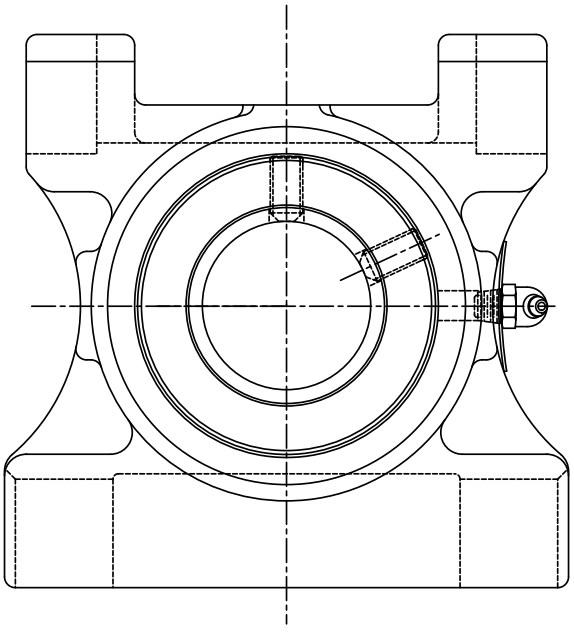

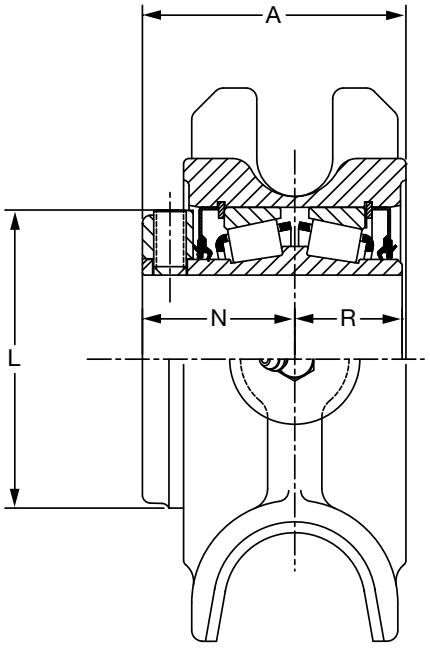

1-3/16” THRU 3” INTERNAL CONSTRUCTION

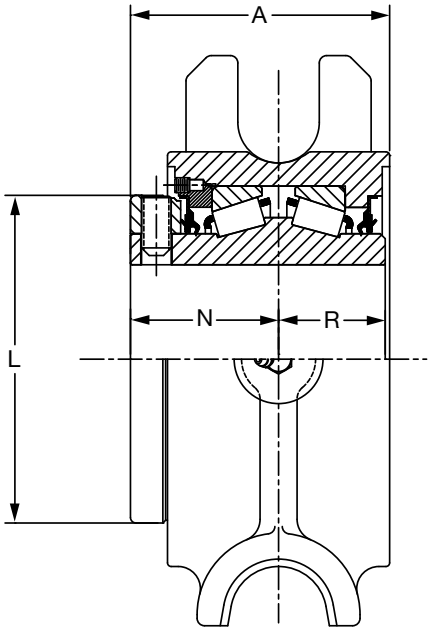

3-3/16” THRU 3-15/16” INTERNAL CONSTRUCTION



Type K TP Take-Up Bearing - Inch

Gray Iron			
Shaft Size Inches #	**Part Number**	**Part Name**	**Weight Lbs (Approx)**
1-15/16	**023314**	TP-K-115R	13
2-3/16	**023316**	TP-K-203R	16
2-7/16	**023318**	TP-K-207R	20
2-15/16	**023322**	TP-K-215R	27
3-7/16	**023325**	TP-K-307R	40
3-15/16	**023327**	TP-K-315R	59

Consult DODGE For Sizes Not Listed.

Shaft Size Inches	Frame Size Ref.	A	L	N	R
1-15/16	TP10	3.03	3.44	1.75	1.22
2-3/16	TP20	3.19	3.75	1.88	1.25
2-7/16	TP30	3.50	4.06	2.00	1.31
2-15/16	TP40	3.75	4.72	2.25	1.44
3-7/16	TP50	4.28	5.50	2.41	1.78
3-15/16	TP60	5.50	6.00	3.13	2.13

NOTE: All sizes use a 1/8-27 NPT hydraulic grease fitting

SELECTION/DIMENSIONS

DOUBLE-INTERLOCK Pillow Block - Inch
2-BOLT BASE

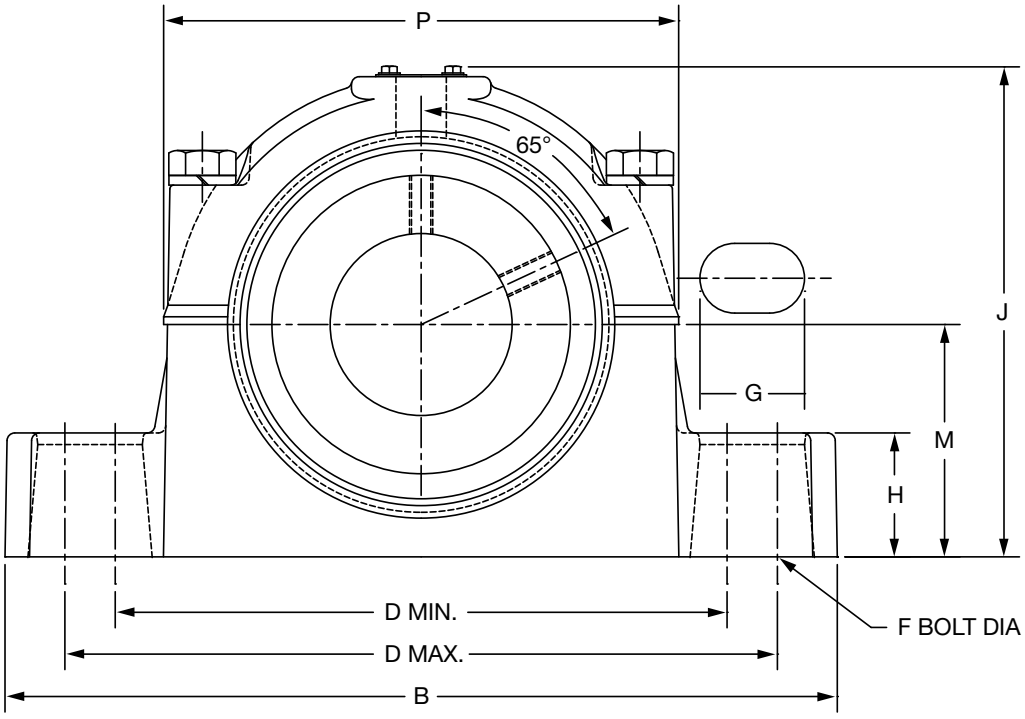

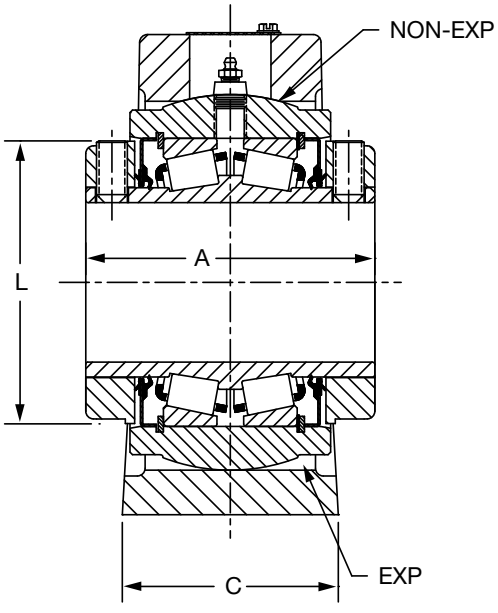

1-3/16” THRU 3” CONSTRUCTION

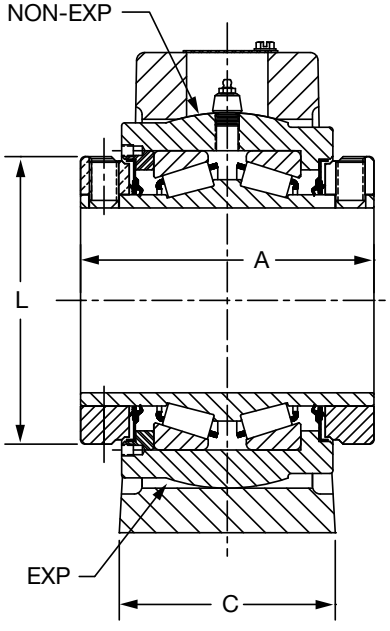

3-3/16” THRU 3-1/2” CONSTRUCTION



DOUBLE-INTERLOCK Pillow Block - Inch

2-BOLT BASE

Gray Iron Non-Expansion						Gray Iron Expansion					
Shaft Size Inches#	Shaft Size Symbol	Pillow Block Assy	Housing Only	Bearing Inner Unit	PIL. BLK. Wt., Aprx Lbs	Shaft Size Inches#	Shaft Size Symbol	Pillow Block Assy	Housing Only	Bearing Inner Unit	PIL. BLK. Wt., Aprx Lbs
1-1/4	104	**023329**	**056130**	**023508**	9	1-1/4	104	**023376**	**056100**	**023508**	9
1-3/8	106	**023330**	**056132**	**023509**	11	1-3/8	106	**023377**	**056102**	**023509**	11
1-7/16	107	**023331**	**056132**	**023510**	11	1-7/16	107	**023378**	**056102**	**023510**	11
1-1/2	108	**023332**	**056134**	**023511**	15	1-1/2	108	**023379**	**056104**	**023511**	15
1-5/8	110	**023333**	**056134**	**023512**	15	1-5/8	110	**023380**	**056104**	**023512**	15
1-11/16	111	**023334**	**056134**	**023513**	15	1-11/16	111	**023381**	**056104**	**023513**	15
1-3/4	112	**023335**	**056136**	**023514**	18	1-3/4	112	**023382**	**056106**	**023514**	18
1-15/16	115	**023337**	**056136**	**023516**	17	1-15/16	115	**023384**	**056106**	**023516**	17
2	200	**023338**	**056136**	**023517**	17	2	200	**023385**	**056106**	**023517**	17
2-3/16	203	**023339**	**056138**	**023518**	25	2-3/16	203	**023386**	**056108**	**023518**	22
2-1/4	204	**023340**	**056140**	**023519**	29	2-1/4	204	**023387**	**056110**	**023519**	29
2-7/16	207	**023341**	**056140**	**023520**	26	2-7/16	207	**023388**	**056110**	**023520**	26
2-1/2	208	**023342**	**056140**	**023521**	26	2-1/2	208	**023389**	**056110**	**023521**	26
2-11/16	211	**023343**	**056142**	**023522**	41	2-11/16	211	**023390**	**056112**	**023522**	42
2-3/4	212	**023344**	**056142**	**023523**	41	2-3/4	212	**023391**	**056112**	**023523**	42
2-15/16	215	**023345**	**056142**	**023524**	40	2-15/16	215	**023392**	**056112**	**023524**	41
3	300	**023346**	**056142**	**023525**	40	3	300	**023393**	**056112**	**023525**	41
3-3/16	303	**023347**	**056144**	**023526**	67	3-3/16	303	**023394**	**056114**	**023526**	69
3-7/16	307	**023349**	**056144**	**023528**	66	3-7/16	307	**023396**	**056114**	**023528**	68
3-1/2	308	**023350**	**056144**	**023529**	66	3-1/2	308	**023397**	**056114**	**023529**	68

Description = P2B-DI-207R For 2-7/16" Size

Consult DODGE For Sizes Not Listed.

Non-Expansion Furnished Unless Otherwise Specified

Description = P2B-DI-207RE For 2-7/16" Size

Consult DODGE For Sizes Not Listed.

Shaft Size Inches	A	B	C	D		F Bolt Dia.	G	H	J	L	M	P	Exp*
				Min.	Max.								
1-1/4	2.75	7.50	1.88	6.00	6.38	3/8	0.67	1.00	4.53	2.25	2.13	5.00	3/32
1-3/8 1-7/16	3.00	8.00	2.19	6.25	6.63	1/2	0.75	1.25	5.23	2.75	2.38	5.52	3/32
1-1/2 1-5/8 1-11/16	3.38	9.00	2.38	6.88	7.63	1/2	1.00	1.38	5.75	3.19	2.63	5.81	3/32
1-3/4 1-15/16 2	3.50	10.00	2.53	7.38	8.44	5/8	1.30	1.50	6.27	3.44	2.88	6.36	9/32
2-3/16	3.75	11.00	2.66	8.06	9.25	5/8	1.33	1.50	6.52	3.75	3.00	6.97	9/32
2-1/4 2-7/16 2-1/2	4.00	12.00	2.81	9.27	10.25	5/8	1.27	1.75	7.03	4.06	3.25	7.38	9/32
2-11/16 2-3/4 2-15/16 3	4.50	13.44	2.94	9.88	11.50	3/4	1.69	2.00	7.92	4.72	3.75	8.31	9/32
3-3/16 3-7/16 3-1/2	5.00	16.00	3.44	12.81	13.81	7/8	1.50	2.25	9.42	5.50	4.50	10.09	9/32

* EXP - Total Expansion Divided Equally On Both Sides Of Bearing (Expansion Bearings Only)

NOTE: All sizes use a 1/8-27 NPT hydraulic grease fitting

Dowel Hole Locations For Precision Positioning - See Page -

FEATURES/BENEFITS PAGE B10-2	HOW TO ORDER/NOMENCLATURE PAGE B10-9	EASY SELECTION PAGE B10-15	ACCESSORIES PAGE B10-64

SELECTION/DIMENSIONS

DOUBLE-INTERLOCK Pillow Block - Inch
4-BOLT BASE

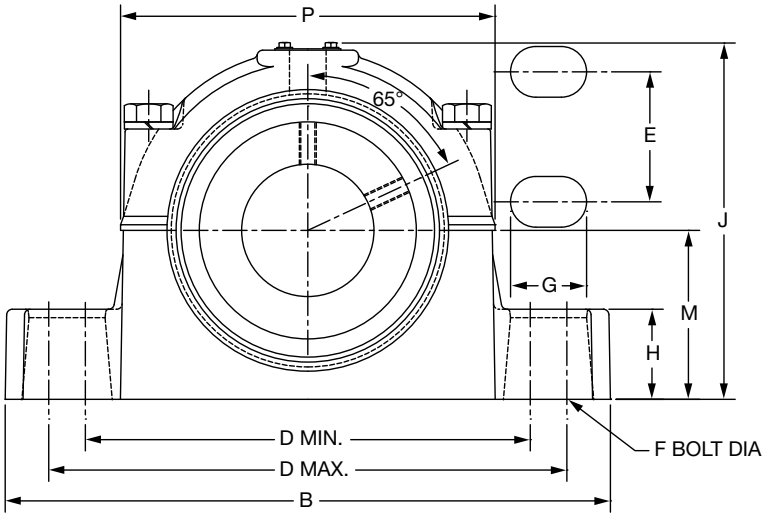

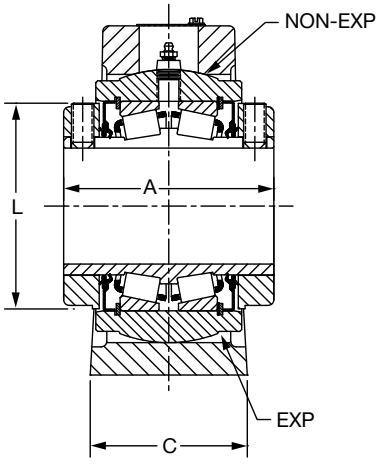

2-1/4" THRU 3" CONSTRUCTION

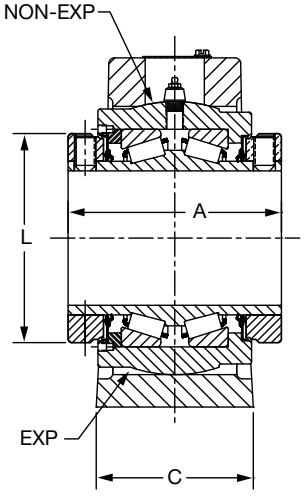

3-3/16" THRU 5" CONSTRUCTION

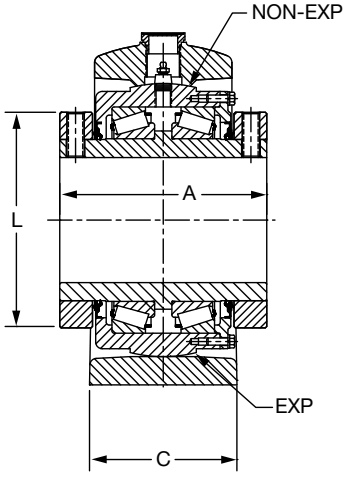

5-7/16" THRU 7" CONSTRUCTION



DOUBLE-INTERLOCK Pillow Block - Inch
4-BOLT BASE

Gray Iron NON EXPANSION						Gray Iron EXPANSION					
Shaft Size Inches#	**Shaft Size Symbol**	**Pillow Block ASSY**	**Housing Only**	**Bearing Inner Unit**	**PIL. BLK. WT., Aprx Lbs**	**Shaft Size Inches#**	**Shaft Size Symbol**	**Pillow Block ASSY**	**Housing Only**	**Bearing Inner Unit**	**PIL. BLK. WT., Aprx Lbs**
2-7/16	207	**023352**	**060745**	**023520**	28	2-7/16	207	**023399**	**060746**	**023520**	28
2-1/2	208	**023353**	**060745**	**023521**	28	2-1/2	208	**023400**	**060746**	**023521**	28
2-11/16	211	**023354**	**060747**	**023522**	38	2-11/16	211	**023401**	**060748**	**023522**	38
2-15/16	215	**023356**	**060747**	**023524**	38	2-15/16	215	**023403**	**060748**	**023524**	38
3	300	**023357**	**060747**	**023525**	38	3	300	**023404**	**060748**	**023525**	38
3-7/16	307	**023360**	**060749**	**023528**	69	3-7/16	307	**023407**	**060750**	**023528**	69
3-1/2	308	**023361**	**060749**	**023529**	69	3-1/2	308	**023408**	**060750**	**023529**	69
3-15/16	315	**023362**	**060751**	**023530**	109	3-15/16	315	**023409**	**060752**	**023530**	110
4	400	**023363**	**060751**	**023531**	109	4	400	**023410**	**060752**	**023531**	110
4-7/16	407	**023364**	**060753**	**023532**	139	4-7/16	407	**023411**	**060754**	**023532**	139
4-1/2	408	**023365**	**060753**	**023533**	135	4-1/2	408	**023412**	**060754**	**023533**	135
4-15/16	415	**023366**	**060755**	**023534**	183	4-15/16	415	**023413**	**060756**	**023534**	181
5	500	**023367**	**060755**	**023535**	181	5	500	**023414**	**060756**	**023535**	179
5-7/16	507	**023368**	**060579**	**023536**	310	5-7/16	507	**023415**	**060578**	**023536**	310
5-15/16	515	**023369**	**060579**	**023537**	299	5-15/16	515	**023416**	**060578**	**023537**	299

Non-Expansion Furnished Unless Otherwise Specified

Consult DODGE For Sizes Not Listed.

Shaft Size Inches	**A**	**B**	**C**	**D**		**E**	**F Bolt Dia**	**G**	**H**	**J**	**L**	**M**	**P**	**Exp***
				Min.	**Max**									
2-7/16 2-1/2	4.00	12.00	3.38	9.27	10.25	1.75	1/2	1.06	1.75	7.03	4.06	3.25	7.38	9/32
2-11/16 2-15/16 3	4.50	13.44	3.50	9.88	11.50	1.88	5/8	1.56	2.00	7.92	4.72	3.75	8.31	9/32
3-7/16 3-1/2	5.00	16.00	4.00	12.81	13.81	2.00	3/4	1.45	2.25	9.42	5.50	4.50	10.09	9/32
3-15/16 4	6.25	17.44	4.75	13.13	14.75	2.00	3/4	1.70	2.75	10.42	6.00	5.00	10.70	11/32
4-7/16 4-1/2	6.75	19.00	4.63	14.38	16.25	2.25	3/4	1.81	3.00	11.59	6.45	5.75	12.45	11/32
4-15/16 5	7.25	20.50	5.13	15.50	18.06	2.50	7/8	2.28	3.25	12.83	7.45	6.25	13.36	11/32
5-7/16 5-15/16	9.00	23.69	6.25	19.00	20.63	3.00	1	1.94	3.50	14.59	9.38	7.13	15.13	1/2

*EXP - Total Expansion Divided Equally On Both Sides Of Bearing (Expansion Bearings Only)

NOTE: All sizes use a 1/8-27 NPT hydraulic grease fitting

Dowel Hole Locations For Precision Positioning - See Page -

SELECTION/DIMENSIONS

DOUBLE-INTERLOCK Flange Bearing - Inch

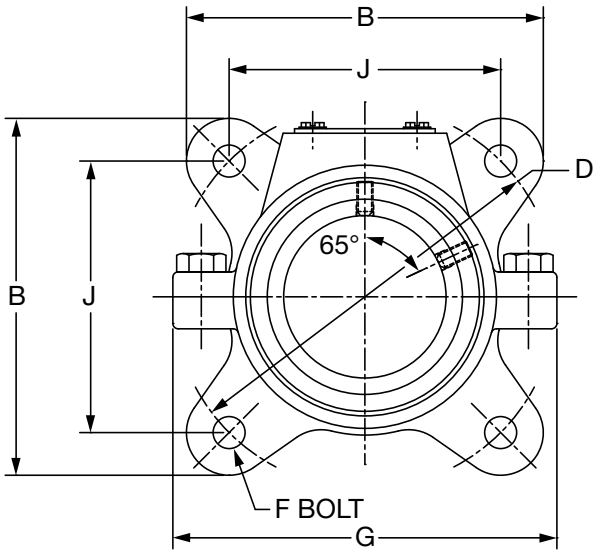

1-3/16” THRU 4” EXTERNAL CONSTRUCTION

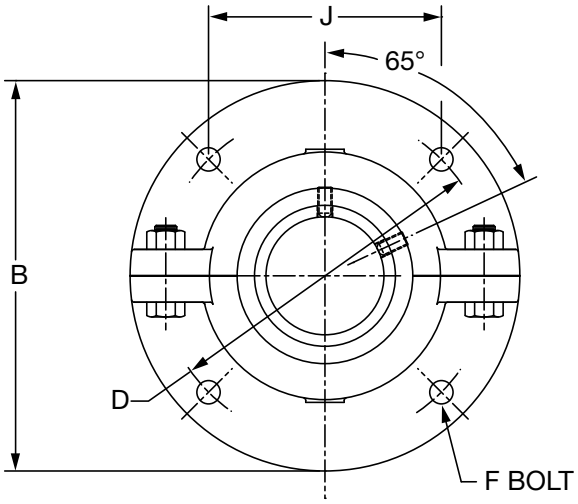

4-7/16” THRU 5” EXTERNAL CONSTRUCTION

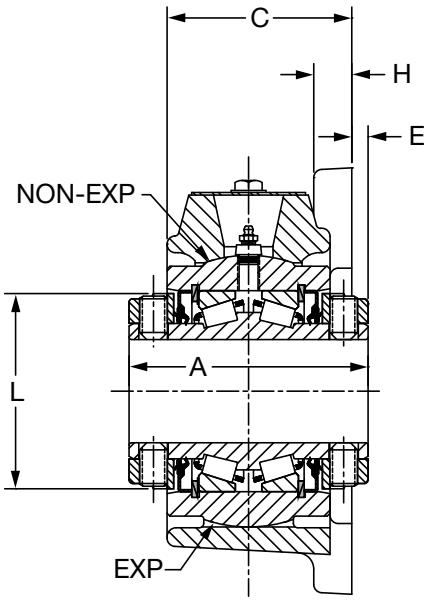

1-3/16” THRU 3” INTERNAL CONSTRUCTION

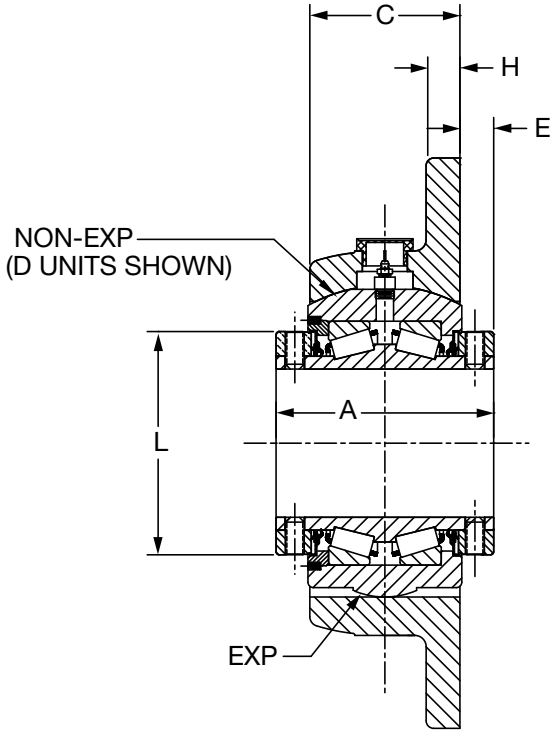

3-3/16” THRU 5” INTERNAL CONSTRUCTION

DODGE



DOUBLE-INTERLOCK Flange Bearing - Inch

DUCTILE Iron Non-Expansion				DUCTILE Iron Expansion			
Shaft Size Inches #	Part Number	Part Name	Weight Lbs (Approx)	Shaft Size Inches #	Part Number	Part Name	Weight Lbs (Approx)
1-3/16	**023422**	F4B-DI-103R	7	1-3/16	**023451**	F4B-DI-103RE	7
1-1/4	**023423**	F4B-DI-104R	7	1-1/4	**023452**	F4B-DI-104RE	7
1-3/8	**023424**	F4B-DI-106R	10	1-3/8	**023453**	F4B-DI-106RE	10
1-7/16	**023425**	F4B-DI-107R	9	1-7/16	**023454**	F4B-DI-107RE	9
1-1/2	**023426**	F4B-DI-108R	14	1-1/2	**023455**	F4B-DI-108RE	14
1-5/8	**023427**	F4B-DI-110R	14	1-5/8	**023456**	F4B-DI-110RE	14
1-11/16	**023428**	F4B-DI-111R	13	1-11/16	**023457**	F4B-DI-111RE	13
1-3/4	**023429**	F4B-DI-112R	16	1-3/4	**023458**	F4B-DI-112RE	16
1-7/8	**023430**	F4B-DI-114R	16	1-7/8	**023459**	F4B-DI-114RE	16
1-15/16	**023431**	F4B-DI-115R	16	1-15/16	**023460**	F4B-DI-115RE	16
2	**023432**	F4B-DI-200R	15	2	**023461**	F4B-DI-200RE	15
2-3/16	**023433**	F4B-DI-203R	19	2-3/16	**023462**	F4B-DI-203RE	19
2-1/4	**023434**	F4B-DI-204R	23	2-1/4	**023463**	F4B-DI-204RE	23
2-7/16	**023435**	F4B-DI-207R	22	2-7/16	**023464**	F4B-DI-207RE	22
2-1/2	**023436**	F4B-DI-208R	22	2-1/2	**023465**	F4B-DI-208RE	22
2-11/16	**023437**	F4B-DI-211R	34	2-11/16	**023466**	F4B-DI-211RE	34
2-3/4	**023438**	F4B-DI-212R	33	2-3/4	**023467**	F4B-DI-212RE	33
2-15/16	**023439**	F4B-DI-215R	31	2-15/16	**023468**	F4B-DI-215RE	31
3	**023440**	F4B-DI-300R	31	3	**023469**	F4B-DI-300RE	31
3-3/16	**023441**	F4B-DI-303R	54	3-3/16	**023470**	F4B-DI-303RE	54
3-1/4	**023442**	F4B-DI-304R	53	3-1/4	**023471**	F4B-DI-304RE	53
3-7/16	**023443**	F4B-DI-307R	52	3-7/16	**023472**	F4B-DI-307RE	52
3-1/2	**023444**	F4B-DI-308R	52	3-1/2	**023473**	F4B-DI-308RE	52
3-15/16	**023445**	F4B-DI-315R	82	3-15/16	**023474**	F4B-DI-315RE	82
4	**023446**	F4B-DI-400R	81	4	**023475**	F4B-DI-400RE	81
4-7/16 ◊	**023447**	F4B-DI-407R	158	4-7/16 ◊	**023476**	F4B-DI-407RE	158
4-1/2 ◊	**023448**	F4B-DI-408R	158	4-1/2 ◊	**023477**	F4B-DI-408RE	158
4-15/16 ◊	**023449**	F4B-DI-415R	257	4-15/16 ◊	**023478**	F4B-DI-415RE	271
5 ◊	**023450**	F4B-DI-500R	329	5	**023479**	F4B-DI-500RE	329

Non-Expansion Furnished Unless Otherwise Specified

◊ 4-7/16" - 5" Housings Are Made Of Cast Iron

Shaft Size Inches	A	B #	C #	D	E	F Bolt Dia.	G #	H #	J	L	Exp *
1-3/16 1-1/4	2.75	5.13	2.13	5.66	0.19	3/8	5.25	0.44	4.00	2.25	5/16
1-3/8 1-7/16	3.00	5.75	2.13	6.25	0.31	1/2	5.75	0.50	4.42	2.75	3/16
1-1/2 1-5/8 1-11/16	3.38	6.13	2.44	6.75	0.38	1/2	6.75	0.50	4.78	3.19	3/16
1-3/4 1-7/8 1-15/16 2	3.50	6.88	2.56	7.50	0.38	5/8	7.25	0.56	5.31	3.44	3/16
2-3/16	3.75	7.19	2.72	8.00	0.44	5/8	7.81	0.56	5.66	3.75	3/16
2-1/4 2-7/16 2-1/2	4.00	7.66	2.94	8.50	0.44	5/8	8.56	0.63	6.00	4.06	5/16
2-11/16 2-3/4 2-15/16 3	4.50	8.88	3.34	9.75	0.50	3/4	9.50	0.69	6.89	4.72	5/16
3-3/16 3-1/4 3-7/16 3-1/2	5.00	10.25	3.72	11.50	0.50	7/8	11.38	0.75	8.13	5.50	5/16
3-15/16 4	6.25	11.44	4.63	13.00	0.75	1	12.88	0.81	9.19	6.00	5/16
4-7/16 4-1/2	6.75	17.75	4.63	15.00	1.06	1	—	1.00	10.61	6.45	13/16
4-15/16 5	7.25	19.00	5.00	16.00	1.13	1-1/8	—	1.13	11.31	7.45	13/16

- These are as cast surfaces. Dimensions may fluctuate due to draft angles and pattern shifts.

Exp * - Total expansion divided equally on both sides of bearing (Expansion Bearings only) **NOTE:** All sizes use a 1/8-27 NPT hydraulic grease fitting

FEATURES/BENEFITS PAGE B10-2	HOW TO ORDER/NOMENCLATURE PAGE B10-9	EASY SELECTION PAGE B10-15	ACCESSORIES PAGE B10-64

SELECTION/DIMENSIONS

DOUBLE-INTERLOCK Units - Inch

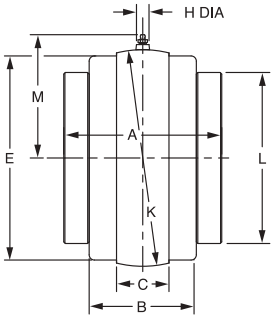

S-1 UNIT

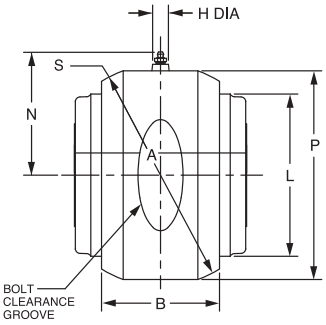

D UNIT

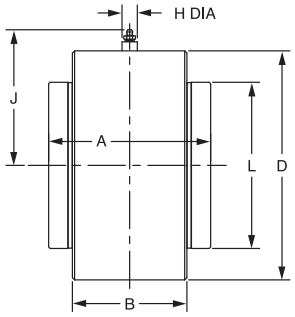

B-1 UNIT

Pillow Block
S-1 units are used in expansion and non-expansion pillow block housings

Flange
S-1 unit is used in expansion flange housings and non-expansion flange housings for 1-3/16 - 4"

Flange
D units are used in non-expansion flange housings

- 4-7/16 - 5" bore size
- Formerly used in DOUBLE-INTERLOCK non-expansion flange bearing and pillow blocks thru 5 bore size prior to '78

B-1 units can only be used in a customer manufactured housing and are often mounted in machines where bored holes can be provided. B-1 units can be used either as non-expansion or expansion bearings by providing a suitable means of locating the unit axially. B-1 units will handle slight misalignment requirements. Shaft must be supported by another unit or bearing. For mounting in rotating wheels the Type C B-1 units is preferred or consult the factory.

Shaft Size Inches	A	B	C	σ D	E		H	J	K	L	M	N	P	S
					Mach Side	Cast Side								
1-3/16 1-1/4	2.75	1.88	1.03	3.000	2.81	2.28	**	2.42	3.125 •	2.25	2.03	---	---	---
1-3/8 1-7/16	3.00	2.06	1.16	3.438	3.25	3.31	11/16	2.54	3.625 •	2.75	2.64	2.88	3.63	3.844 •
1-1/2 1-5/8 1-11/16	3.38	2.31	1.19	3.938	3.75	3.81	11/16	2.79	4.125 •	3.19	2.89	3.13	4.09	4.344 •
1-3/4 1-7/8 1-15/16 2	3.50	2.44	1.50	4.250	4.13	4.19	11/16	2.95	4.562 •	3.44	3.10	3.25	4.44	4.656 •
2-3/16	3.75	2.56	1.56	4.625	4.50	4.63	11/16	3.13	5.000 •	3.75	3.32	3.44	4.72	5.000 •
2-1/4 2-7/16 2-1/2	4.00	2.75	1.44	5.000	4.81	4.88	11/16	3.32	5.186 •	4.06	3.41	3.58	5.16	5.437 •
2-11/16 2-3/4 2-15/16 3	4.50	3.00	1.88	5.875	5.56	5.63	11/16	3.76	6.061 •	4.72	3.85	4.00	5.81	6.094 •
3-3/16 3-1/4 3-7/16 3-1/2	5.00	3.50	2.00	7.125	6.81	6.88	11/16	4.38	7.373#	5.50	4.51	4.69	7.22	7.500 ^
3-15/16 4	6.25	4.50	2.38	7.875	7.44	7.50	*	5.48	7.997#	6.00	5.16	5.13	8.13	8.375 ^
4-7/16 4-1/2	6.75	4.63	2.38	8.750	8.31	8.38	*	5.91	8.872#	6.45	5.60	5.50	8.88	9.125 ^
4-15/16 5	7.25	5.13	2.88	10.125	9.56	9.63	*	6.6	10.184#	7.45	6.26	6.19	10.25	10.500 ^
5-7/16 5-15/16 6	9.00	6.06	2.88	---	11.19	11.19	15/16	---	11.874	9.38	7.10	---	---	---
6-7/16 6-1/2 6-15/16 7	10.50	7.13	3.00	---	13.25	13.25	15/16	---	14.248	11.38	8.29	---	---	---

* 11/16" DIA ON D Units; 15/16" ON S-1 Units AND 3/4 HEX ON B-1 Units
** 11/16" DIA ON B-1 Units; 7/16" DIA ON S-1 Units

• +.000 TO .001"
±.0005"

σ +.000 TO -.002"
+.000 TO -.003"

FEATURES/BENEFITS PAGE B10-2 | HOW TO ORDER/NOMENCLATURE PAGE B10-9 | EASY SELECTION PAGE B10-15 | ACCESSORIES PAGE B10-64



DOUBLE-INTERLOCK Units - Inch

"S-1" Units -- Gray Iron
1-3/16" thru 3"

Shaft Size Inches #	Part Number	Part Name	Weight Lbs (Approx)
1-3/16	**023507**	S1U-DI-103R	3
1-1/4	**023508**	S1U-DI-104R	4
1-3/8	**023509**	S1U-DI-106R	5
1-7/16	**023510**	S1U-DI-107R	5
1-1/2	**023511**	S1U-DI-108R	7
1-5/8	**023512**	S1U-DI-110R	7
1-11/16	**023513**	S1U-DI-111R	7
1-3/4	**023514**	S1U-DI-112R	8
1-7/8	**023515**	S1U-DI-114R	8
1-15/16	**023516**	S1U-DI-115R	8
2	**023517**	S1U-DI-200R	8
2-3/16	**023518**	S1U-DI-203R	10
2-1/4	**023519**	S1U-DI-204R	12
2-7/16	**023520**	S1U-DI-207R	11
2-1/2	**023521**	S1U-DI-208R	11
2-11/16	**023522**	S1U-DI-211R	18
2-3/4	**023523**	S1U-DI-212R	17
2-15/16	**023524**	S1U-DI-215R	17
3	**023525**	S1U-DI-300R	17

Consult DODGE For Sizes Not Listed.

"S-1" Units -- Gray Iron
3-3/16" thru 7"

Shaft Size Inches #	Part Number	Part Name	Weight Lbs (Approx)
3-3/16	**023526**	S1U-DI-303R	34
3-1/4	**023527**	S1U-DI-304R	31
3-7/16	**023528**	S1U-DI-307R	31
3-1/2	**023529**	S1U-DI-308R	31
3-15/16	**023530**	S1U-DI-315R	43
4	**023531**	S1U-DI-400R	43
4-7/16	**023532**	S1U-DI-407R	57
4-1/2	**023533**	S1U-DI-408R	64
4-15/16	**023534**	S1U-DI-415R	82
5	**023535**	S1U-DI-500R	82
5-7/16	**023536**	S1U-DI-507R	159
5-15/16	**023537**	S1U-DI-515R	135
6	**023538**	S1U-DI-600R	128
6-7/16	**023539**	S1U-DI-607R	187
6-1/2	**023540**	S1U-DI-608R	182
6-15/16	**023541**	S1U-DI-615R	180
7	**023542**	S1U-DI-700R	178

Consult DODGE For Sizes Not Listed.

"D" Units -- Gray Iron

Shaft Size Inches #	Part Number	Part Name	Weight Lbs (Approx)
1-3/16	--------	DU-DI-103R	--------
1-1/4	--------	DU-DI-104R	--------
1-3/8	**023480**	DU-DI-106R	5
1-7/16	**023481**	DU-DI-107R	5
1-1/2	**023482**	DU-DI-108R	8
1-5/8	**023483**	DU-DI-110R	7
1-11/16	**023484**	DU-DI-111R	7
1-3/4	**023485**	DU-DI-112R	8
1-7/8	**023486**	DU-DI-114R	8
1-15/16	**023487**	DU-DI-115R	8
2	**023488**	DU-DI-200R	8
2-3/16	**023489**	DU-DI-203R	9
2-1/4	**023490**	DU-DI-204R	12
2-7/16	**023491**	DU-DI-207R	12
2-1/2	**023492**	DU-DI-208R	12
2-11/16	**023493**	DU-DI-211R	18
2-3/4	**023494**	DU-DI-212R	17
2-15/16	**023495**	DU-DI-215R	16
3	**023496**	DU-DI-300R	16
3-3/16	**023497**	DU-DI-303R	32
3-1/4	**023498**	DU-DI-304R	31
3-7/16	**023499**	DU-DI-307R	30
3-1/2	**023500**	DU-DI-308R	29
3-15/16	**023501**	DU-DI-315R	46
4	**023502**	DU-DI-400R	43
4-7/16	**023503**	DU-DI-407R	57
4 1/2	**023504**	DU-DI-408R	64
4-15/16	**023505**	DU-DI-415R	85
5	**023506**	DU-DI-500R	85

Consult DODGE For Sizes Not Listed.

"B-1" Units -- Gray Iron

Shaft Size Inches #	Part Number	Part Name	Weight Lbs (Approx)
1-3/16	**023543**	BIU-DI-103R	3
1-3/8	**023545**	BIU-DI-106R	5
1-7/16	**023546**	BIU-DI-107R	5
1-1/2	**023547**	BIU-DI-108R	6
1-5/8	**023548**	BIU-DI-110R	6
1-3/4	**023550**	BIU-DI-112R	8
1-15/16	**023552**	BIU-DI-115R	8
2	**023553**	BIU-DI-200R	7
2-3/16	**023554**	BIU-DI-203R	9
2-7/16	**023556**	BIU-DI-207R	12
2-1/2	**023557**	BIU-DI-208R	11
2-11/16	**023558**	BIU-DI-211R	17
2-3/4	**023559**	BIU-DI-212R	17
2-15/16	**023560**	BIU-DI-215R	17
3	**023561**	BIU-DI-300R	17
3-7/16	**023564**	BIU-DI-307R	30
3-1/2	**023565**	BIU-DI-308R	30
3-15/16	**023566**	BIU-DI-315R	45
4	**023567**	BIU-DI-400R	44
4-7/16	**023568**	BIU-DI-407R	58
4 1/2	**023569**	BIU-DI-408R	64
4-15/16	**023570**	BIU-DI-415R	87
5	**023571**	BIU-DI-500R	86

Consult DODGE For Sizes Not Listed.

NOTE: All sizes use a 1/8-27 NPT hydraulic grease fitting

FEATURES/BENEFITS PAGE B10-2	HOW TO ORDER/NOMENCLATURE PAGE B10-9	EASY SELECTION PAGE B10-15	ACCESSORIES PAGE B10-64

SELECTION/DIMENSIONS

TAF Pillow Block - Inch
2-BOLT BASE

NOTE: All sizes use a 1/8 - 27 NPT hydraulic grease fitting

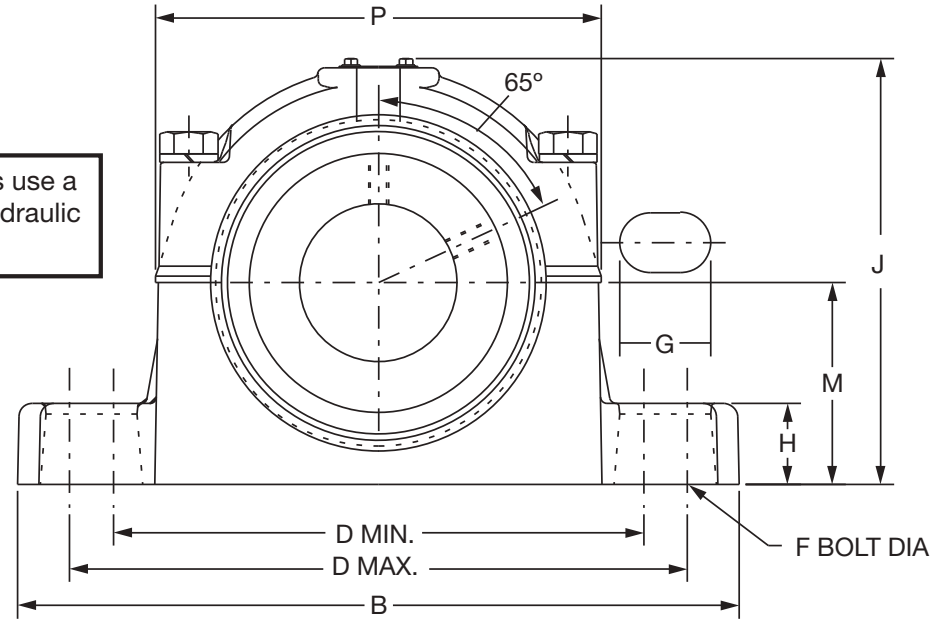

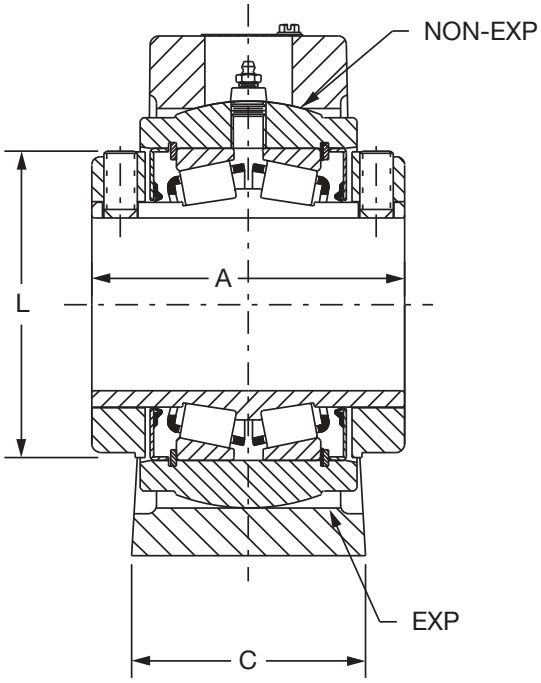

1-7/16" THRU 3" CONSTRUCTION

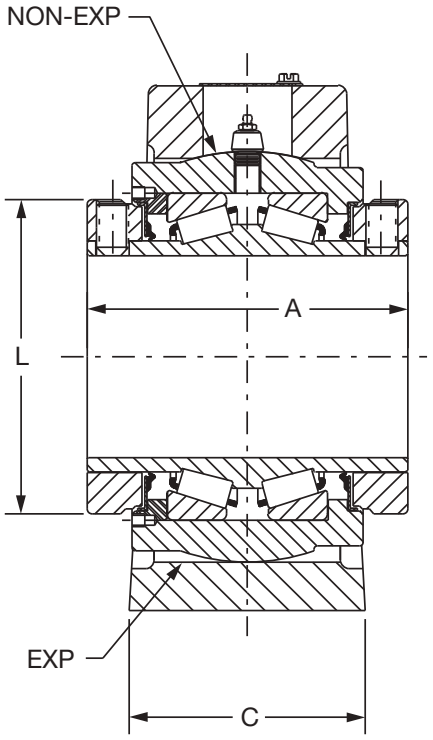

3-7/16" THRU 3-1/2" CONSTRUCTION



TAF Pillow Block - Inch
2-BOLT BASE

Gray Iron Non-Expansion							Gray Iron Expansion						
Shaft Size Inches #	**Shaft Size Symbol**	**Saf Housing Number**	**Pillow Block Assy**	**Housing Only**	**Bearing Inner Unit**	**Pil. Blk.Wt. Aprx Lbs**	**Shaft Size Inches #**	**Shaft Size Symbol**	**Saf Housing Number**	**Pillow Block Assy**	**Housing Only**	**Bearing Inner Unit**	**Pil. Blk.Wt. Aprx Lbs**
1-7/16	107	509	**037580**	**037540**	**037632**	12	1-7/16	107	509	**037592**	**037555**	**037632**	12
1-11/16	111	510	**037581**	**037541**	**037633**	15	1-11/16	111	510	**037593**	**037556**	**037633**	15
1-15/16	115	511	**037582**	**037542**	**037634**	17	1-15/16	115	511	**037594**	**037557**	**037634**	17
2-3/16	203	513	**037583**	**037543**	**037635**	25	2-3/16	203	513	**037595**	**037558**	**037635**	25
2-7/16	207	515	**037584**	**037544**	**037636**	30	2-7/16	207	515	**037596**	**037559**	**037636**	30
2-1/2	208		**037585**	**037544**	**037637**	30	2-1/2	208		**037597**	**037559**	**037637**	30
2-11/16	211	516	**037586**	**037545**	**037638**	38	2-11/16	211	516	**037598**	**037560**	**037638**	38
2-3/4	212		**037587**	**037545**	**037639**	38	2-3/4	212		**037599**	**037560**	**037639**	38
2-15/16	215	517	**037588**	**037546**	**037640**	45	2-15/16	215	517	**037600**	**037561**	**037640**	45
3	300		**037589**	**037546**	**037641**	44	3	300		**037601**	**037561**	**037641**	44
3-7/16	307	520	**037590**	**037547**	**037642**	71	3-7/16	307	520	**037602**	**037562**	**037642**	71
3-1/2	308		**037591**	**037547**	**037643**	70	3-1/2	308		**037603**	**037562**	**037643**	70

Non-Expansion Furnished Unless Otherwise Specified.

Consult DODGE For Sizes Not Shown

Shaft Size Inches	**Saf Series**	**A**	**B**	**C**	**D**		**F Bolt Dia**	**G**	**H**	**J**	**L**	**M**	**P**	**Exp***
					Min.	**Max.**								
1-7/16	509	3.00	8.25	2.19	6.25	7.00	1/2	0.94	0.88	5.11	2.75	2.25	5.52	3/32
1-11/16	510	3.38	8.25	2.38	6.50	7.00	1/2	0.88	1.03	5.63	3.19	2.50	5.81	3/32
1-15/16	511	3.50	9.63	2.75	7.38	8.25	5/8	1.20	1.03	6.14	3.44	2.75	6.36	9/32
2-3/16	513	3.75	11.00	3.25	8.66	9.50	5/8	1.44	1.03	6.52	3.75	3.00	6.95	9/32
2-7/16 2-1/2	515	4.00	11.13	3.13	8.63	9.63	5/8	1.27	1.25	7.03	4.06	3.25	7.38	9/32
2-11/16 2-3/4	516	4.50	12.59	3.50	9.88	11.00	3/4	1.44	1.00	7.67	4.72	3.50	8.31	9/32
2-15/16 3	517	4.50	12.59	3.50	9.88	11.00	3/4	1.44	1.25	7.92	4.72	3.75	8.31	9/32
3-7/16 3-1/2	520	5.00	15.38	4.34	11.81	13.13	7/8	1.66	1.66	9.42	5.50	4.50	10.09	9/32

*EXP Total Expansion Divided Equally On Both Sides Of Bearing (Expansion Bearing Only).

NOTE: All sizes use a 1/8-27 NPT hydraulic grease fitting

FEATURES/BENEFITS PAGE B10-2	HOW TO ORDER/NOMENCLATURE PAGE B10-9	EASY SELECTION PAGE B10-15	ACCESSORIES PAGE B10-64

SELECTION/DIMENSIONS

TAF Pillow Block - Inch
4-BOLT BASE

NOTE: All sizes use a 1/8 - 27 NPT hydraulic grease fitting

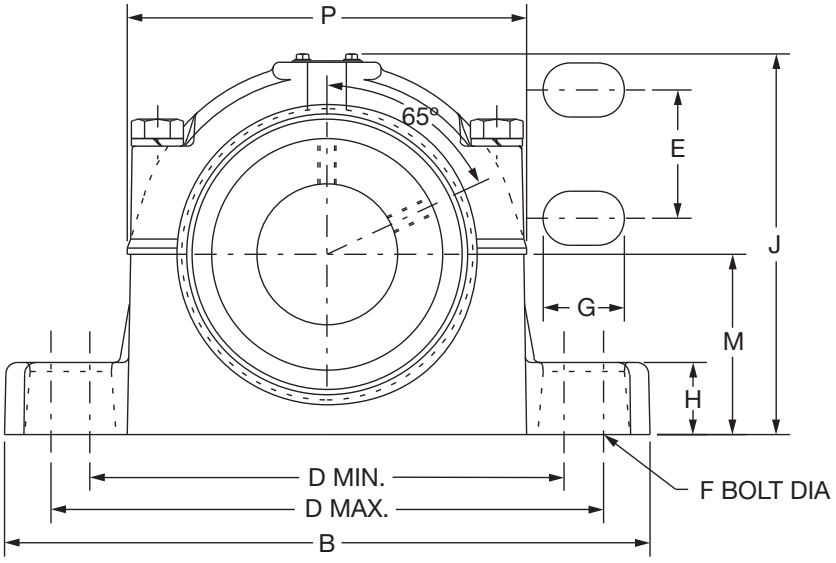

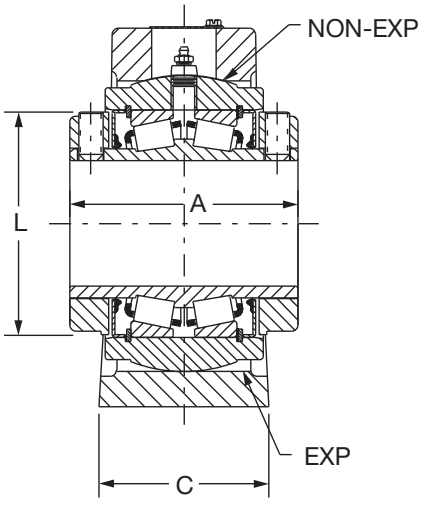

2-7/16" THRU 3"
CONSTRUCTION

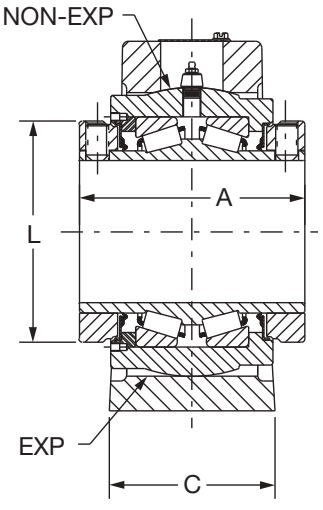

3-7/16" THRU 5"
CONSTRUCTION

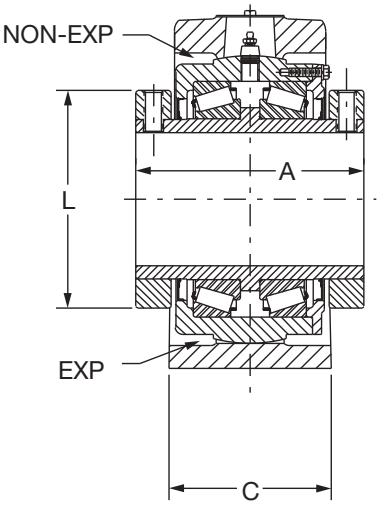

5-7/16" THRU 7"
CONSTRUCTION

DODGE



TAF Pillow Block - Inch
4-BOLT BASE

Gray Iron Non-Expansion							Gray Iron Expansion						
Shaft Size Inches #	Shaft Size Symbol	SAF Housing Number	Pillow Block Assy	Housing Only	Bearing Inner Unit	Pil. Blk.Wt. Aprx Lbs	Shaft Size Inches #	Shaft Size Symbol	SAF Housing Number	Pillow Block Assy	Housing Only	Bearing Inner Unit	Pil. Blk.Wt. Aprx Lbs
2-7/16	207	515	**037604**	**037548**	**037636**	30	2-7/16	207	515	**037618**	**037563**	**037636**	30
2-1/2	208	515	**037605**	**037548**	**037637**	30	2-1/2	208	515	**037619**	**037563**	**037637**	30
2-11/16	211	516	**037606**	**037549**	**037638**	38	2-11/16	211	516	**037620**	**037564**	**037638**	38
2-3/4	212	516	**037607**	**037549**	**037639**	38	2-3/4	212	516	**037621**	**037564**	**037639**	38
2-15/16	215	517	**037608**	**037550**	**037640**	45	2-15/16	215	517	**037622**	**037565**	**037640**	45
3	300	517	**037609**	**037550**	**037641**	44	3	300	517	**037623**	**037565**	**037641**	44
3-7/16	307	520	**037610**	**037551**	**037642**	71	3-7/16	307	520	**037624**	**037566**	**037642**	71
3-1/2	308	520	**037611**	**037551**	**037643**	70	3-1/2	308	520	**037625**	**037566**	**037643**	70
3-15/16	315	522	**037612**	**037552**	**037644**	110	3-15/16	315	522	**037626**	**037567**	**037644**	110
4	400	522	**037613**	**037552**	**037645**	110	4	400	522	**037627**	**037567**	**037645**	110
4-7/16	407	526	**037614**	**037553**	**037646**	140	4-7/16	407	526	**037628**	**037568**	**037646**	140
4-1/2	408	526	**037615**	**037553**	**037647**	140	4-1/2	408	526	**037629**	**037568**	**037647**	140
4-15/16	415	528	**037616**	**037554**	**037648**	180	4-15/16	415	528	**037630**	**037569**	**037648**	180
5	500	528	**037617**	**037554**	**037649**	180	5	500	528	**037631**	**037569**	**037649**	180
5-7/16	507	532	**023584**	**042628**	**023610**	300	5-7/16	507	532	**023603***	**042627***	**023610**	300
5-15/16	515	534	**023585**	**042630**	**023611**	300	5-15/16	515	534	**023604***	**042629***	**023611**	300
6	600	534	**023586**	**042630**	**023612**	300	6	600	534	**023605***	**042629***	**023612**	300
6-7/16	607	536	**023587**	**042632**	**023613**	510	6-7/16	607	536	**023606***	**042631***	**023613**	510
6-1/2	608	536	**023588**	**042632**	**023614**	510	6-1/2	608	536	**023607***	**042631***	**023614**	510
6-15/16	615	538	**023589**	**042634**	**023615**	52	6-15/16	615	538	**023608***	**042633***	**023615**	520
7	700	538	**023590**	**042634**	**023616**	0520	7	700	538	**023609***	**042633***	**023616**	520

Non-Expansion Furnished Unless Otherwise Specified

Consult DODGE For Sizes Not Shown

Shaft Size	SAF Series	A	B	C	D		E	F Bolt Dia	G	H	J	L	M	P	Exp*
					min.	max.									
2-7/16 2-1/2	515	4.00	11.13	3.13	8.63	9.63	1.88	1/2	1.13	1.25	7.03	4.06	3.25	7.38	9/32
2-11/16 2-3/4	516	4.50	12.59	3.50	9.88	11.00	2.13	5/8	1.33	1.00	7.67	4.72	3.50	8.31	9/32
2-15/16 3	517	4.50	12.59	3.50	9.88	11.00	2.13	5/8	1.33	1.25	7.92	4.72	3.75	8.31	9/32
3-7/16 3-1/2	520	5.00	15.38	4.34	11.63	13.13	2.38	3/4	1.63	1.66	9.42	5.50	4.50	10.09	9/32
3-15/16 4	522	6.25	16.50	4.75	12.59	14.50	2.75	3/4	1.83	1.78	10.36	6.00	4.94	10.70	11/32
4-7/16 4-1/2	526	6.75	18.38	5.13	14.50	16.00	3.25	7/8	1.75	2.06	11.83	6.45	6.00	12.45	11/32
4-15/16 5	528	7.25	19.70	5.88	15.63	17.38	3.38	1	2.00	2.06	12.58	7.45	6.00	13.36	11/32
5-7/16	532	9.00	21.66	6.25	17.63	19.25	3.75	1	1.92	2.34	14.00	9.38	6.69	15.13	13/32
5-15/16 6	534	9.00	24.75	6.75	19.00	21.63	4.25	1	2.44	2.88	14.38	9.38	7.06	15.13	13/32
6-7/16 6-1/2	536	10.50	26.75	7.13	21.00	23.63	4.63	1	2.44	3.00	16.19	11.38	7.50	18.31	13/32
6-15/16 7	538	10.50	28.00	7.50	21.63	24.38	4.50	1-1/4	2.75	3.13	16.56	11.38	7.88	18.31	13/32

*EXP - Total Expansion Divided Equally On Both Sides Of Bearing (Expansion Bearings Only)

Note: All sizes use a 1/8-27 NPT hydraulic grease fitting

FEATURES/BENEFITS PAGE B10-2	HOW TO ORDER/NOMENCLATURE PAGE B10-9	EASY SELECTION PAGE B10-15	ACCESSORIES PAGE B10-64

SELECTION/DIMENSIONS

TAF Units - Inch

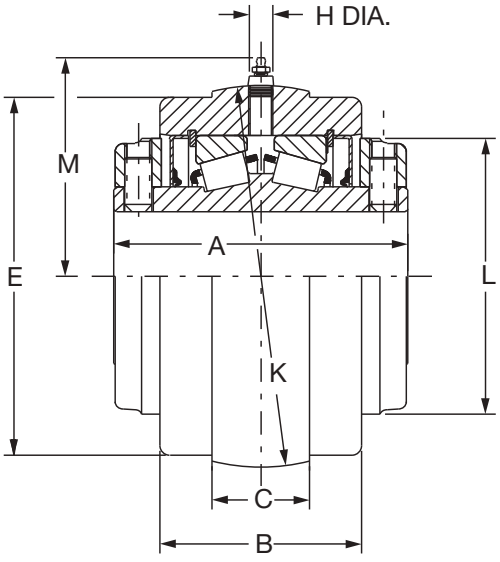

S-1 UNIT
1-7/16" THRU 3" CONSTRUCTION

NOTE: All sizes use a 1/8 - 27 NPT hydraulic grease fitting

TAF S1 Unit Is Used In All Expansion And Non-Expansion TAF Housings

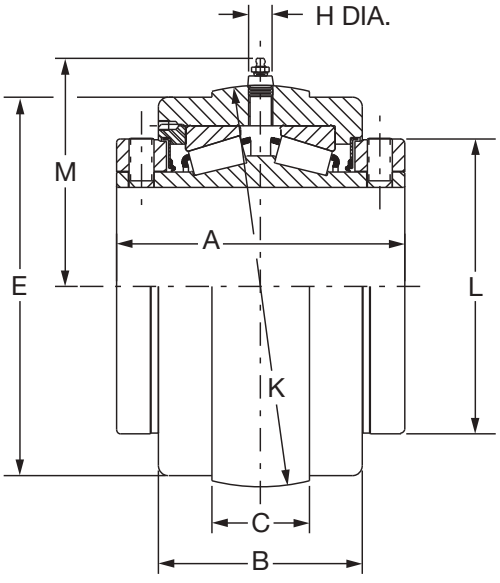

S-1 UNIT
3-3/16" THRU 5" CONSTRUCTION

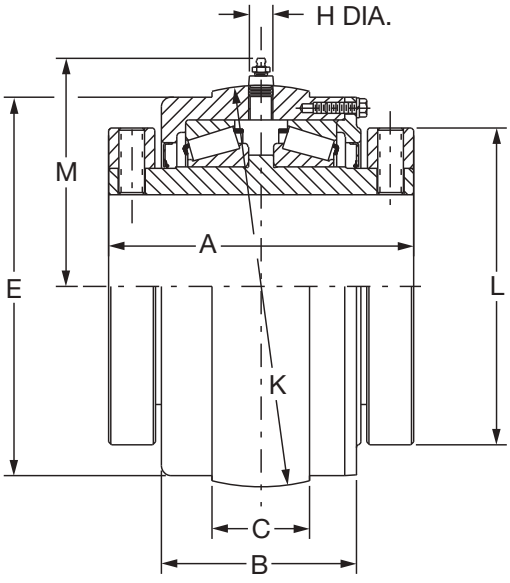

S-1 UNIT
5-7/16" THRU 7" CONSTRUCTION



TAF Units - Inch

"S-1" Units - Gray Iron			
Shaft Size # Inches	**Part Number**	**Part Name**	**Weight Lbs (Approx)**
1-7/16	**037632**	S1U509-TAF-107	5
1-11/16	**037633**	S1U510-TAF-111	7
1-15/16	**037634**	S1U511-TAF-115	8
2-3/16	**037635**	S1U513-TAF-203	9
2-7/16	**037636**	S1U515-TAF-207	11
2- 1/2	**037637**	S1U515-TAF-208	11
2-11/16	**037638**	S1U516-TAF-211	18
2-3/4	**037639**	S1U516-TAF-212	17
2-15/16	**037640**	S1U517-TAF-215	17
3	**037641**	S1U517-TAF-300	17
3-7/16	**037642**	S1U520-TAF-307	31
3-1/2	**037643**	S1U520-TAF-307	31
3-15/16	**037644**	S1U522-TAF-315	43
4	**037645**	S1U522-TAF-400	43
4-7/16	**037646**	S1U526-TAF-407	57
4-1/2	**037647**	S1U526-TAF-408	68
4-15/16	**037648**	S1U528-TAF-415	82
5	**037649**	S1U528-TAF-500	82
5-7/16	**023610**	S1U-TAF-507R	155
5-15/16	**023611**	S1U-TAF-515R	143
6	**023612**	S1U-TAF-600R	138
6-7/16	**023613**	S1U-TAF-607R	187
6-1/2	**023614**	S1U-TAF-608R	182
6-15/16	**023615**	S1U-TAF-615R	180
7	**023616**	S1U-TAF-700R	178

NOTE: TAF inserts below 5-7/16" are not interchangeable with TAF-XT housings, with shafts of 5" or less, order DOUBLE-INTERLOCK S-1 units on Page B10-50

Shaft Size Inches	**A**	**B**	**C**	**E**		**H**	**K**	**L**	**M**
				Mach. Side	**Cast Side**				
1-7/16	3.00	2.06	1.16	3.25	3.31	0.75	3.595 •	2.75	2.50
1-11/16	3.38	2.31	1.19	3.75	3.81	0.75	4.095 •	3.19	2.88
1-15/16	3.50	2.44	1.50	4.13	4.18	0.75	4.502 •	3.44	2.75
2-3/16	3.75	2.56	1.56	4.50	4.56	0.75	4.940 •	3.75	2.95
2-7/16 2- 1/2	4.00	2.75	1.44	4.81	4.87	0.75	5.156 •	4.06	3.38
2-11/16 2-3/4	4.50	3.00	1.88	5.56	5.63	0.75	6.001	4.72	3.88
2-15/16 3	4.50	3.00	1.88	5.56	5.63	0.75	6.001 •	4.72	3.88
3-7/16 3-1/2	5.00	3.50	2.19	6.81	6.88	0.75	7.313 ✳	5.50	4.50
3-15/16 4	6.25	4.50	2.59	7.44	7.40	0.94	7.937 ✳	6.00	5.13
4-7/16 4-1/2	6.75	4.63	2.56	8.31	8.32	0.94	8.812 ✳	6.45	5.50
4-15/16 5	7.25	5.13	3.13	9.56	9.54	0.94	10.124 ✳	7.45	6.19
5-7/16 5-15/16 6	9.00	5.88	2.56	11.19	11.19	0.94	11.563 ^	9.38	6.91
6-7/16 6-1/2 6-15/16 7	10.50	7.13	3.00	13.25	13.25	0.94	13.748 ^	11.38	8.00

• +.000,-.001" ^.000,-.003" ✳ +.0005

Consult DODGE For Sizes Not Listed

FEATURES/BENEFITS PAGE B10-2	HOW TO ORDER/NOMENCLATURE PAGE B10-9	EASY SELECTION PAGE B10-15	ACCESSORIES PAGE B10-64

MODIFICATIONS ACCESSORIES

DODGE

Type E-Xtra / Type K / DOUBLE-INTERLOCK /TAF
E-TECT SEAL KITS

Shaft Size Inches	Kit Part Number
1-3/16 TO 1-1/4	**037650***
1-3/8 TO 1-7/16	**037651***
1-1/2 TO 1-11/16	**037652***
1-3/4 TO 2	**037653***
2-3/16	**037654***
2-1/4 TO 2-1/2	**037655***
2-11/16 TO 3	**037656***
3-3/16 TO 3-1/2	**037657***
3-15/16 TO 4	**037658***
4-7/16 TO 4-1/2	**037659***
4-15/16 TO 5	**037660***
5-7/16 TO 6	**037673****
6-7/16 TO 7	**037674****

* Kit includes one collar, set screws and seal

** Kit for 5-7/16” consists of a modified v-ring seal. This seal can only be used with bearings produced after September 1995

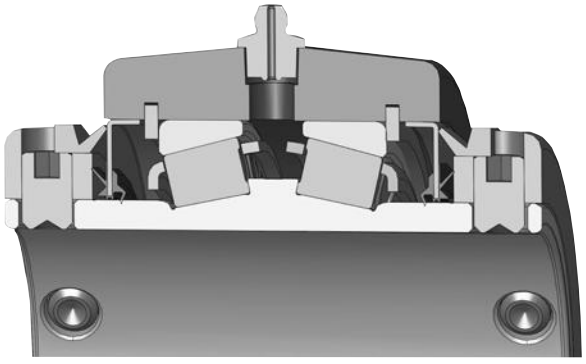

XTS Sealing with E-Tect Option

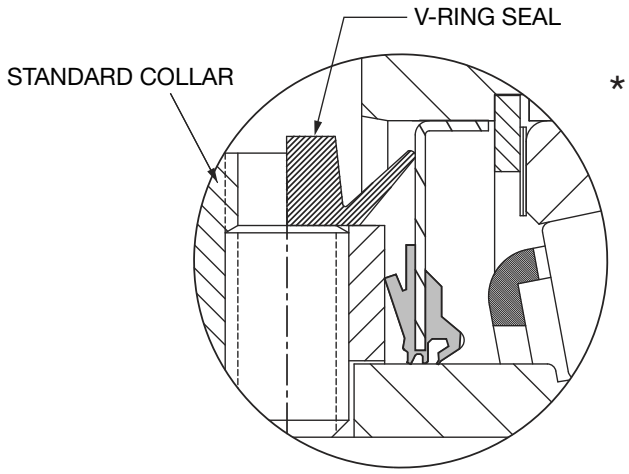

SMALL E-TECT SEAL
1-3/16 THRU 5"

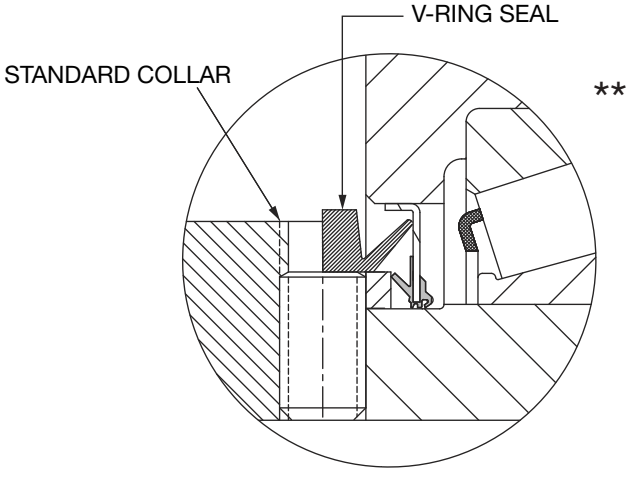

LARGE E-TECT SEAL
5-7/16 THRU 7"



Type E-Xtra

Type E-Xtra END CLOSURE KITS - INCH

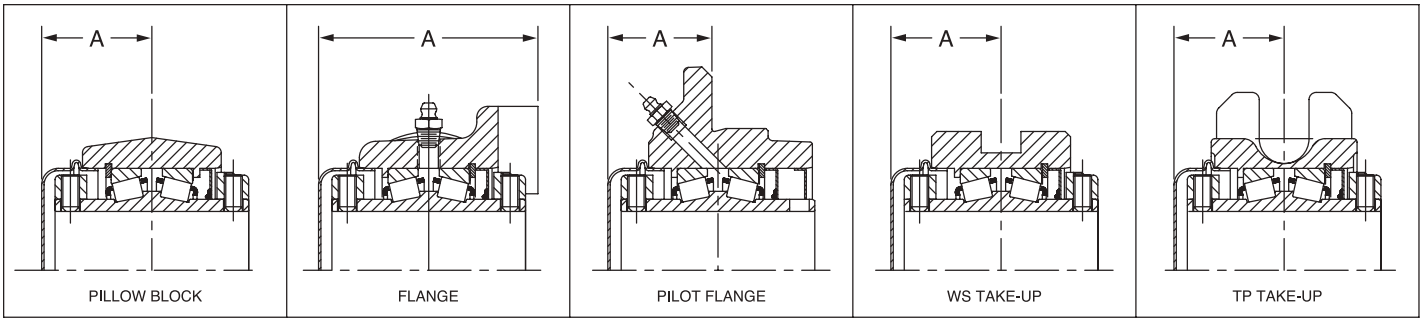

** Seal must be removed before installing the end cover

Shaft Size Δ Inches	Kit* Part No.	"A" Dimension (Inch)				
		Pillow Block	Flange	Pilot Flange	WS Take-Up	TP Take-Up
1-3/16 TO 1-1/4	**023795**	1.56	2.97	1.47	- - - -	- - - -
1-3/8 TO 1-7/16	**023796**	1.34	3.22	1.66	1.66	- - - -
1-1/2 TO 1-11/16	**023797**	1.89	3.67	1.73	1.76	- - - -
1-3/4 TO 2	**023798**	1.95	3.80	1.73	1.92	1.98
2-3/16	**023799**	2.09	4.06	1.88	2.06	2.06
2-1/4 TO 2-1/2	**023800**	2.25	4.38	2.00	2.19	2.31
2-11/16 TO 3	**023801**	2.44	4.88	2.19	2.44	2.44

Δ - Consult DODGE For Sizes Not Listed.

* - Kit Includes End Closure And Special Collar.

MODIFICATIONS ACCESSORIES

Type K, DOUBLE-INTERLOCK and TAF End Covers

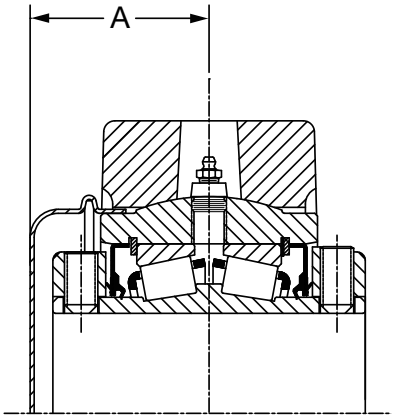

DOUBLE-INTERLOCK SHOWN
K, DI, & TAF

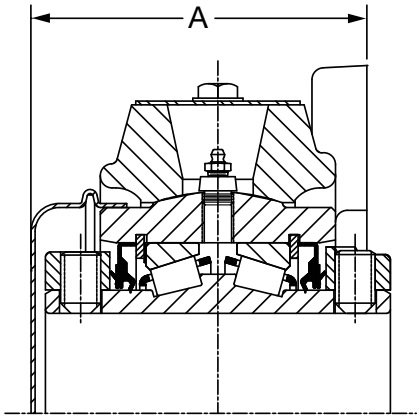

DOUBLE-INTERLOCK SHOWN
K & DI

Shaft Size Inches	Part Number	"A" Dimension	
		Pillow Block	Flange Bearing
1-3/8 TO 1-7/16	**037681**	1.66	2.84
1-1/2 TO 1-11/16	**037682**	1.86	3.17
1-3/4 TO 2	**037683**	1.92	3.30
2-3/16	**037684**	2.06	3.50
2-1/4 TO 2-1/2	**037685**	2.19	3.75
2-11/16 TO 3	**037686**	2.44	4.19
3-3/16 TO 3-1/2	**037687**	2.69	4.94
3-5/16 TO 4	**037688**	3.31	5.81
4-7/16 TO 4-1/2	**037689**	3.56	5.88
4-15/16 TO 5	**037690**	3.81	6.31

END CLOSURE MOUNTS ON MACHINED OD SIDE OF S-1 UNIT



TAF - Smart Stock Selections
HOW TO ORDER

Step 1:
The Housing Choices Standard Or Drilled

When speed only will be monitored, select the standard housing.

When vibration, and / or temperature will be monitored, select the drilled housing

All housing part numbers shown are 4-bolt base, non-expansion



Shaft Size	Series	Standard Housing Part Numbers If you are monitoring speed only Part #	Drilled Housing Part Number For temperature and/or vibration Part #
207	515	**037548**	**053067**
215	517	**037550**	**053628**
307	520	**037551**	**067350**
315	522	**037552**	**054960**
407	526	**037553**	**067352**
415	528	**037554**	**067353**
507	532	**042628**	**067354**
515	534	**042630**	**067357**
615	538	**042634**	**067234**

Step 2:
Pick An S1 Unit

Smart S-1 units feature

- Embedded thermocouple drilled and tapped holes for prox covers
- Special locking collar with prox targets



Shaft Size	S1 Unit
207	**055805**
215	**055806**
307	**055807**
315	**049235**
407	**055915**
415	**055840**
507	**067355**
515	**067356**
615	**067323**

Step 3:
The Sensor Choices

For speed monitoring, use AC prox and prox cover or DC prox and prox cover.

For temperature monitoring, use thermocouple transmitter.

Prox Covers		
Shaft	Housing	Part Number
207	515	**067340**
215	517	**067342**
307	520	**067343**
315	522	**067344**
407	526	**067345**
415	528	**067346**
507	532	**067347**
515	534	**067347**
615	538	**067348**

TAF Sensor kits	Part Number
AC Prox	**055943**
Thermocouple Transmitter	**055931**
Cable Connector Kit	**063694**
4-20 ma Accelerometer and Thermocouple	**067576**

* For additional details on DODGE Smart Bearings, see brochure DMR-2026-6

FEATURES/BENEFITS PAGE B10-2	HOW TO ORDER/NOMENCLATURE PAGE B10-9	SELECTION/DIMENSIONS PAGE B10-22	ACCESSORIES PAGE B10-64

SELECTION

Type E-Xtra - Metric

SELECTION
METRIC TYPE E-XTRA TAPERED ROLLER BEARINGS

DODGE Type E-Xtra Double Row Tapered Roller Bearings have the capacity to carry heavy radial loads, thrust loads, and combined radial and thrust loads. The maximum recommended load which can be applied is limited by various components in the system such as bearing, housing, shaft, shaft attachment, speed and life requirements as listed in this catalog. DODGE Unitized Type E-Xtra Roller Bearings have been applied successfully even when these limits have been exceeded under controlled operating conditions. Contact DODGE Application Engineering (864-284-5700) for applications which exceed the recommendations of this catalog.

L_{10} Life, Hours -- The fatigue life which may be expected from at least 90% of a given group of bearings operating under identical conditions.

$$L_{10}\text{ Life, Hours} = \left(\frac{C^{90}}{P}\right)^{10/3} X \quad \frac{1{,}500{,}000}{RPM}$$

Where: C_{90} = Dynamic Capacity (Table 9), kN
P = Equivalent Radial Load, kN

GENERAL

Heavy Service -- For heavy shock loads, frequent shock loads, or severe vibrations, increase the Equivalent Radial Load up to 50% (according to severity of conditions) to obtain a Modified Equivalent Radial Load. Consult Application Engineering at 864-284-5700 for additional selection assistance.

Thrust load values shown in the table below are recommended as a guide for general applications that will give adequate L_{10} life. With substantial radial loads also present, it is advisable to calculate actual L_{10} life to assure the bearing meets requirements.

RPM RANGE	20 - 200	201 - 2000	Over 2000
RECOMMENDED THRUST LOAD	$C_{90}/4$	$C_{90}/8$	$C_{90}/12$

The shaft tolerances recommended below are adequate for the conditions outlined in this catalog. Since the allowable load, especially at a low speed, is very large, the shaft should be checked to assure adequate shaft strength.

The magnitude and direction of both the thrust and radial load must be taken into account when selecting a shaft size. **Heavy loads should be directed through the base. Where uplift loads are involved see Table 13 for maximum values.** Where a load pulls the housing away from the mounting base, both the hold-down bolts and housing must be of adequate strength. Auxiliary load carrying devices such as shear bars are advisable for side or end loading of plummer blocks.

Shaft Tolerances	
Shaft Size	**Tolerance**
Up to 35mm	+.000 - .013mm
40 to 100mm	+.000 - .025mm
100 - 150mm	+.000 - .038mm
160 - 180mm	+.000 - .051mm

Type E-Xtra - Metric

SELECTING BEARINGS SUPPORTING RADIAL LOADS ONLY

1. Define the desired L_{10} Life, in Hours
2. Establish bearing radial load, F_R, kN
3. Establish RPM.

F_R = P for Pure Radial Load Conditions.

P = Equivalent radial load, kN

(The Dodge program BEST• can be used to find application loads.)

Using the easy selection Table 1, Page B10-14 under the RPM column find the equivalent load that equals or is higher than the application radial load for the desired life. The shaft size on the far left will be the minimum shaft size that you can use for your application. If the desired life is different than the values shown on the chart, use alternate Method A shown below.

Example: L_{10} Life = 30,000 Hours
Radial load = 17.5 kN
RPM = 1000

At the intersection of the 1000 RPM column and at the 30,000 hours L_{10} life row, the equivalent radial load of 18 kN exceeds the 17.5kN application radial load for shaft size 55mm. Therefore, an 55mm E bearing can be used to meet the application bearing conditions of the above example:

ALTERNATE METHOD A --SELECTING A BEARING FOR AN L_{10} LIFE VALUE NOT SHOWN IN THE EASY SELECTION CHART.

The L_{10} life equation can be rearranged so that the bearing dynamic capacity C_{90} is identified in terms of L_{10}, RPM and P.

$$C_{90} = \left(\frac{L^{10} X\ RPM}{1{,}500{,}000}\right)^{0.3} X\ P$$

(P = F_R for Pure Radial Load Conditions)

Since the L_{10}, RPM, and P are known, solve for C_{90}. Select from the dynamic capacity column on Table 10 the C_{90} value equal to or greater than the C_{90} value just calculated. The bore size on the far left represents the minimum shaft size selection. Check that the application RPM does not exceed the MAX. RPM on Table 10. When selecting a L_{10} life of less than 30,000 hours particular attention must be paid to shaft deflection and proper lubricant selection.

- The DODGE Bearing Evaluation and Selection Technique (BEST) is a menu driven computer program that calculates bearing loads, fatigue life, and operating temperature for a two bearing shaft system based on user supplied input parameters. This interactive program is available at **www.ptwizard.com** under the Product Selection area.



Type E-Xtra - Metric

SELECTING BEARINGS SUPPORTING BOTH RADIAL AND THRUST LOADS

When a bearing supports both a radial load and a thrust load, the loading on the two rows is shared unequally depending on the ratio of thrust to radial load. The use of the X (radial factor) and Y (thrust factor) from Table 9 convert the applied thrust load and radial loads to an equivalent radial load having the same effect on the life of the bearing as a radial load of this magnitude.

The equivalent radial load $P = XF_R + YF_A$ (Equation 1)

Where:

P = Equivalent radial load, kN

F_R = Radial load, kN

F_A = Thrust (axial) load, kN

e = Thrust load to radial load factor (Table 1)

X = Radial load factor (Table 1)

Y = Thrust load factor (Table 1)

Calculate FA/FR and compare to **e** for the selected bore size. Determine X and Y from Table 1 depending on whether FA/FR is equal to or less than **e**, or FA/FR greater than **e**. Substitute all known values into the equivalent radial load equation. P (equivalent radial load) can be used in the life formula to determine L_{10} life in hours or compared to the allowable equivalent radial load ratings for the speed and hours life desired in the easy selection table.

SELECTING BEARINGS SUPPORTING ONLY THRUST LOADS

Type E-Xtra tapered roller bearings are well suited to carry pure thrust loads. Follow the same selection procedure used above “Selecting Bearings Supporting Both Radial and Thrust Loads” except the equation $P = XF_R + YF_A$ reduces to $P = YF_A$. (XF_R is equal to zero)

Table 10: Radial And Thrust Factors For Type E-Xtra Tapered Roller Bearings (Metric)

Shaft Size (MM)	e	$F_A/F_R \le e$		$F_A/F_R > e$		Dynamic Capacity C_{90}* K Newtons	Maximum RPM	Maximum Slip Fit Radial Load, (Fr)K N**
		X	Y	X	Y			
35	0.46	.87	1.89	.70	2.28	24.5	3,820	22.2
40	0.44	.87	1.96	.70	2.37	31.4	3,320	28.5
45, 50	0.33	.87	2.64	.70	3.18	41.4	3,050	37.4
55	0.35	.87	2.38	.70	2.87	43.8	2,730	39.6
60, 65	0.40	.87	2.17	.70	2.63	47.2	2,420	42.2
70, 75	0.45	.87	1.87	.70	2.26	49.5	2,060	44.5
80, 85, 90	0.50	.87	1.71	.70	2.07	79.0	1,640	71.2
100	0.49	.87	1.77	.70	2.14	108.5	1,530	98.0
110,115	0.53	.87	1.63	.70	1.97	133.4	1,360	120.0
125	0.47	.87	1.83	.70	2.21	183.8	1,200	164.6
135,140,150	0.49	.87	1.76	.70	2.12	181.1	915	188.6
160,170,180	0.54	.87	1.61	.70	1.95	307.9	790	320.2

COMPARING SPHERICAL TO TAPER ROLLER BEARING

The dynamic capacity C (spherical) and C_{90} (taper) are not to the same base. To compare basic dynamic capacities, multiply C x .259 and compare to C_{90}.

To select and then compare, use the complete selection procedure for each type bearing and then compare.

* C_{90}---Dynamic capacity based on a rated life of 90 million revolutions or 3000 hours at 500 RPM.

** If load exceeds maximum allowable slip fit radial load (F_R), line to line, to-light press fit of shaft required. Application loads up to maximum slip fit radial load may be applied if recommended shaft tolerances are used.

SELECTION



Type E-Xtra - Metric

Table 11 - Easy Selection for Type E-Xtra Metric

Shaft Size	L10 Hours	Allowable Equivalent Radial Load Rating (kN) At Various Revolutions Per Minute														
		50	100	150	250	500	750	1000	1250	1500	1750	2000	2500	2700	3000	3500
35mm	10000	34	28	24	21	17	15	14	13	12	12	11	11	10	10	10
	30000	24	20	18	15	12	11	10	9	9	8	8	8	7	7	7
	40000	22	18	16	14	11	10	9	9	8	8	7	7	7	7	6
	60000	20	16	14	12	10	9	8	8	7	7	7	6	6	6	6
	100000	17	14	12	11	9	8	7	6	6	6	6	5	5	5	5
40mm	10000	44	36	31	27	22	19	18	17	16	15	14	14	13	13	12
	30000	31	26	23	19	16	14	13	12	11	11	10	10	10	9	9
	40000	29	23	21	18	14	13	12	11	10	10	10	9	9	8	8
	60000	26	21	18	16	13	11	10	10	9	9	8	8	8	7	7
	100000	22	18	16	14	11	10	9	8	8	8	7	7	7	6	6
45mm 50mm	10000	58	47	41	35	29	26	23	22	21	20	19	18	17	17	
	30000	41	34	30	26	21	18	17	16	15	14	14	13	13	12	
	40000	38	31	27	23	19	17	15	14	14	13	13	12	11	11	
	60000	34	27	24	21	17	15	14	13	12	12	11	10	10	10	
	100000	29	23	21	18	14	13	12	11	10	10	10	9	9	8	
55mm	10000	61	49	44	38	31	27	25	23	22	21	20	19	18	18	
	30000	44	36	32	27	22	19	18	17	16	15	14	14	13	13	
	40000	40	33	29	25	20	18	16	15	14	14	13	12	12	12	
	60000	36	29	26	22	18	16	14	14	13	12	12	11	11	10	
	100000	31	25	22	19	15	14	12	12	11	11	10	9	9	9	
60mm 65mm	10000	66	53	47	40	33	29	27	25	24	23	22	20			
	30000	47	38	34	29	24	21	19	18	17	16	16	15			
	40000	43	35	31	27	22	19	18	16	16	15	14	13			
	60000	38	31	28	24	19	17	16	15	14	13	13	12			
	100000	33	27	24	20	16	15	13	13	12	11	11	10			
70mm 75mm	10000	69	56	49	42	34	31	28	26	25	24	23				
	30000	49	40	36	31	25	22	20	19	18	17	16				
	40000	45	37	33	28	23	20	18	17	16	16	15				
	60000	40	33	29	25	20	18	16	15	14	14	13				
	100000	34	28	25	21	17	15	14	13	12	12	11				
80mm 85mm 90mm	10000	110	89	79	68	55	49	45	42	40	38					
	30000	79	64	57	49	40	35	32	30	28	27					
	40000	72	59	52	45	36	32	29	28	26	25					
	60000	64	52	46	40	32	28	26	24	23	22					
	100000	55	45	40	34	28	24	22	21	20	19					
100mm	10000	151	123	109	93	76	67	61	57	54						
	30000	109	88	78	67	54	48	44	41	39						
	40000	100	81	72	61	50	44	41	38	36						
	60000	88	72	63	54	44	39	36	34	32						
	100000	76	61	54	47	38	34	31	29	27						

For Maximum RPM See Table 1 on Page B10-14

In the Shaded Area E, DI & TAF Mounted Unites Required Line-To-Line Press Fit to Shaft:



Type E-Xtra - Metric

Table 11 - Easy Selection for Type E-Xtra Metric

Shaft Size	L10 Hours	Allowable Equivalent Radial Load Rating (kN) At Various Revolutions Per Minute													
		50	100	150	250	500	750	1000	1250	1500	1750	2000	2500	2700	3000	3500
110mm 115mm	10000	186	151	133	114	93	82	76	71							
	30000	133	108	96	82	67	59	54	51							
	40000	122	99	88	76	61	54	50	47							
	60000	108	88	78	67	54	48	44	41							
	100000	93	76	67	57	47	41	38	35							
125mm	10000	255	208	184	158	128	113	104	97							
	30000	184	149	132	113	92	82	75	70							
	40000	169	137	121	104	84	75	69	64							
	60000	149	121	107	92	75	66	61	57							
	100000	128	104	92	79	64	57	52	49							
135mm 140mm 150mm	10000	250	205	180	155	125	110	100								
	30000	180	145	130	110	90	80	75								
	40000	165	135	120	100	85	75	65								
	60000	145	120	105	90	75	65	60								
	100000	125	100	90	75	65	55	50								
160mm 170mm 180mm	10000	430	345	305	265	215	190									
	30000	305	250	220	190	155	135									
	40000	280	230	205	175	140	125									
	60000	250	205	180	155	125	110									
	100000	215	175	155	130	105	95									

For Maximum RPM See Table 1 on Page B10-14

In the Shaded Area E, DI & TAF Mounted Unites Required Line-To-Line Press Fit to Shaft:

SELECTION



Type E-Xtra

LUBRICATION

DODGE Type E-Xtra Metric Tapered Roller Bearings are lubricated at the factory with Mobil Mobilgrease XHP222, a superior industrial grease using a lithium complex thickener and a highly refined base oil. This grease will adequately handle low and medium speeds with low and medium loads at normal temperatures as defined on Table 15. For very low and high speeds, for heavy loads and for low and high temperatures, special greases must be used. Contact DODGE Application Engineering (864) 284-5700. DODGE engineers will recommend bearings and lubricants for the unusual conditions. DODGE also has the expertise to custom design and build special bearings for your needs.

High Speed Operation --- In the higher speed ranges too much grease will cause overheating. The amount of grease that the bearing will take for particular high speed application can only be determined by experience. If excess grease in the bearing caused overheating, it will be necessary to remove grease fitting (also drain plug when furnished) to permit excess grease to escape. When establishing a relubrication schedule, note that a small amount of grease at frequent intervals is preferable to a large amount at infrequent intervals.

Operation in Presence of Dust, Water or Corrosive Vapors --- Under these conditions the bearing should contain as much grease as speed will permit, since a full bearing with consequent slight leakage is the best protection against entrance of foreign material. In the higher speed ranges too much grease will cause overheating --- see “High Speed Operation”. In the lower speed ranges, it is advisable to add extra grease to a new bearing before putting into operation. Bearings should be greased as often as necessary (daily if required) to maintain a slight leakage at the seals.

INSTALLATION AND MAINTENANCE

In nearly all applications good design practice requires two bearings supporting the shaft. In cases where three or more bearings are installed, unless precautions are taken to line the bearings up, both vertically and horizontally, it is possible to induce heavy loads. To ensure good alignment, mounting surfaces must be checked for flatness and must lie in the same plane. When tightening base bolts and cap bolts, each bolt should be alternately tightened in incremental torque values until full torque is achieved to prevent the angular shifting of the pillow block that occurs when one bolt is tightened to its full torque. Shimming may be required to minimize misalignment.

Table 12 - Relubrication Schedule

Hours Run Per Day	Suggested Lubrication Period In Weeks							
	1 To 250 RPM	251 To 500 RPM	501 To 750 RPM	751 To 1000 RPM	1001 To 1500 RPM	1501 To 2000 RPM	2001 To 2500 RPM	2501 To 3000 RPM
8	12	12	10	7	5	4	3	2
16	12	7	5	4	2	2	2	1
24	10	5	3	2	1	1	1	1



Type E-Xtra - Metric

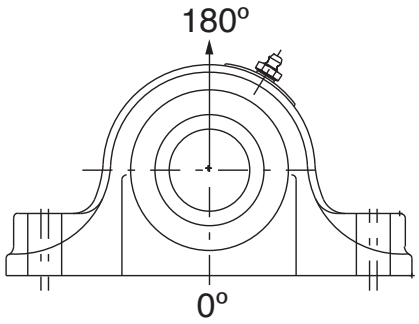

Table 13 - Type Housing Ratings, Gray Iron

Bore Size MM	Maximum Housing Cap Loads, kN
	P180
35	14
40	13
45, 50	23
55	16
60, 65	29
70, 75	31
80, 85, 90	70
100	72
110,115	93
125	116
135,140,150	194
160,170,180	204

Table 14 - Definition Of Operating Conditions For Tapered Roller Bearings

LOW SPEED	UP TO 20% OF MAX. RPM (TABLE 9)
MEDIUM SPEED	OVER 20% TO 80% OF MAX. RPM
HIGH SPEED	OVER 80% OF MAX. RPM
LIGHT LOAD	UP TO 30% OF C90 (TABLE 9)
NORMAL LOAD	OVER 30% TO 70% OF C_{90}
HEAVY LOAD	OVER 70% OF C_{90}
LOW TEMPERATURE	-75°C TO - 10°C
MEDIUM TEMPERATURE	ABOVE - 10°C TO 100°C
HIGH TEMPERATURE	ABOVE 100°C TO 150°C
VERY HIGH TEMPERATURE	ABOVE 150°C TO 205°C

SELECTION/DIMENSIONS

Type E-Xtra - Plummer Block - Metric
2 & 4 BOLT BASE

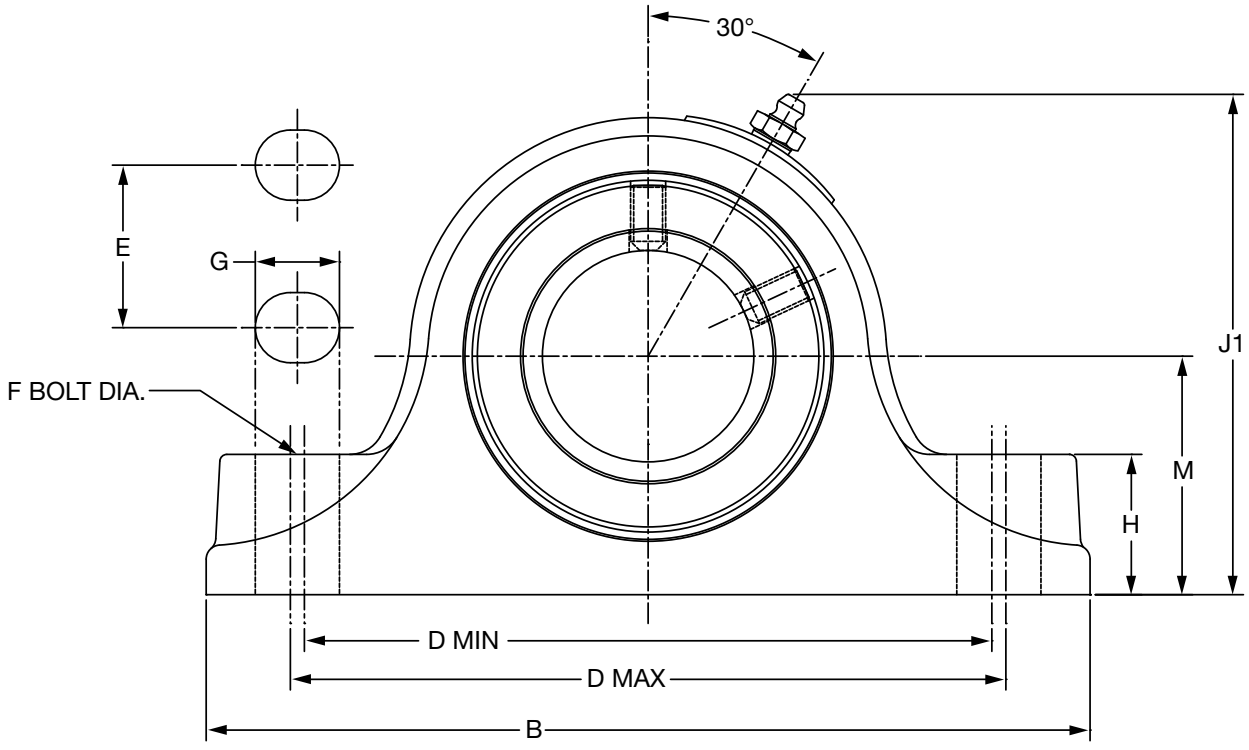

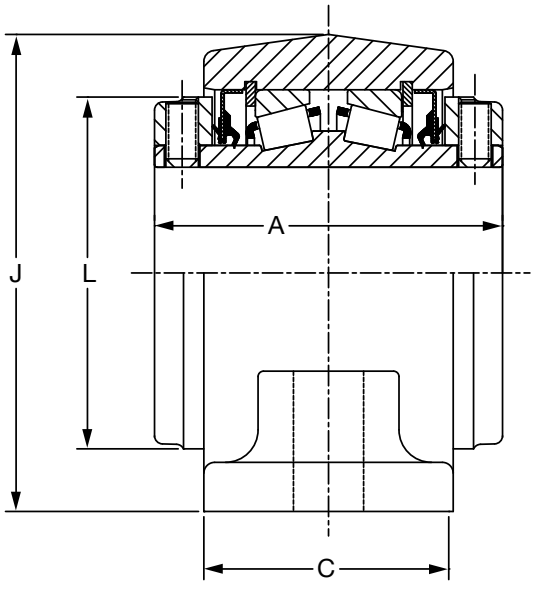

35mm THRU 75mm CONSTRUCTION

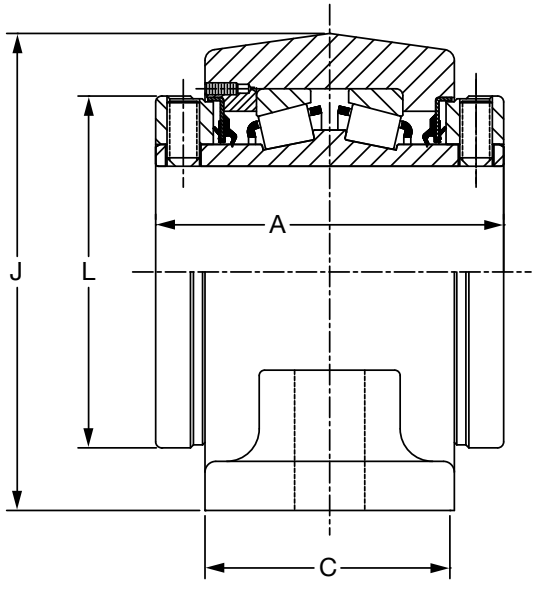

80 mm THRU 125 mm CONSTRUCTION

FEATURES/BENEFITS PAGE B10-2	HOW TO ORDER/NOMENCLATURE PAGE B10-9	EASY SELECTION PAGE B10-15	ACCESSORIES PAGE B10-64



Type E-Xtra - Plummer Block - Metric

Type E-Xtra Plummer Blocks, 2-Bolt

Shaft Size (mm)	Part Number	Part Name	Weight Lbs. (Approx.)
35mm	**023620**	P2B-E-035MR	7
40mm	**023621**	P2B-E-040MR	10
45mm	**023622**	P2B-E-045MR	12
50mm	**023623**	P2B-E-050MR	12
55mm	**023624**	P2B-E-055MR	15
60mm	**023625**	P2B-E-060MR	20
65mm	**023626**	P2B-E-065MR	20
70mm	**023627**	P2B-E-070MR	29
75mm	**023628**	P2B-E-075MR	27
80mm	**023629**	P2B-E-080MR	49
85mm	**023630**	P2B-E-085MR	47
90mm	**023631**	P2B-E-090MR	45

Type E-Xtra Plummer Blocks, 4-Bolt

Shaft Size (mm)	Part Number	Part Name	Weight Lbs. (Approx.)
100mm	**023632**	P4B-E-100MR	69
110mm	**023633**	P4B-E-110MR	85
115mm	**023634**	P4B-E-115MR	91
125mm	**023635**	P4B-E-125MR	136
135mm	**023636**	P4B-E-135MR	245
140mm	**023637**	P4B-E-140MR	240
150mm	**023638**	P4B-E-150MR	235
160mm	**023639**	P4B-E-160MR	355
170mm	**023640**	P4B-E-170MR	345
180mm	**023641**	P4B-E-180MR	345

Type E-Xtra Plummer Blocks, 2-Bolt Base

Shaft Size (mm)	A	B	C	D		F Bolts	G	H	J1	L	M
				Min.	Max						
35mm	76.2	187.0	54.0	142.8	149.2	M12	19	29	101.6	70	47.6
40mm	85.7	200.0	60.0	155.5	161.9	M12	19	32	113.5	81	54.0
45mm 50mm	88.9	225.0	64.0	174.6	181.0	M16	22	33	119	87	57.2
55mm	95.3	244.0	67.0	193.7	200.0	M16	22	38	131.4	95	63.5
60mm 65mm	101.6	267.0	73.0	212.7	219.0	M16	22	41	142.8	103	69.9
70mm 75mm	114.3	305.0	76.0	236.5	246.0	M20	27	48	161.1	120	79.4
80mm 85mm 90mm	127.0	356.0	89.0	274.6	284.2	M20	30	57	190.5	139.7	95.3

Type E-Xtra Plummer Blocks, 4-Bolt Base

Shaft Size (mm)	A	B	C	D		E	F Bolts	G	H	J1	L	M
				Min.	Max							
100mm	158.8	387	114	311.2	323.9	57.2	M20	28	62	216	152.4	108.0
110mm 115mm	171.5	422	117	336.6	349.3	63.5	M20	28	70	238	164	120.7
125mm	184.2	470	130	387.4	400.0	73.0	M24	32	76	276	189	139.7
135mm 140mm 150mm	228.6	559	159	441.3	485.8	95.3	M24	51	83	335	238	169.9
160mm 170mm 180mm	266.7	660	181	539.8	590.6	117.5	M24	51	94	379	289	190.5

SELECTION/DIMENSIONS

DOUBLE-INTERLOCK - Metric

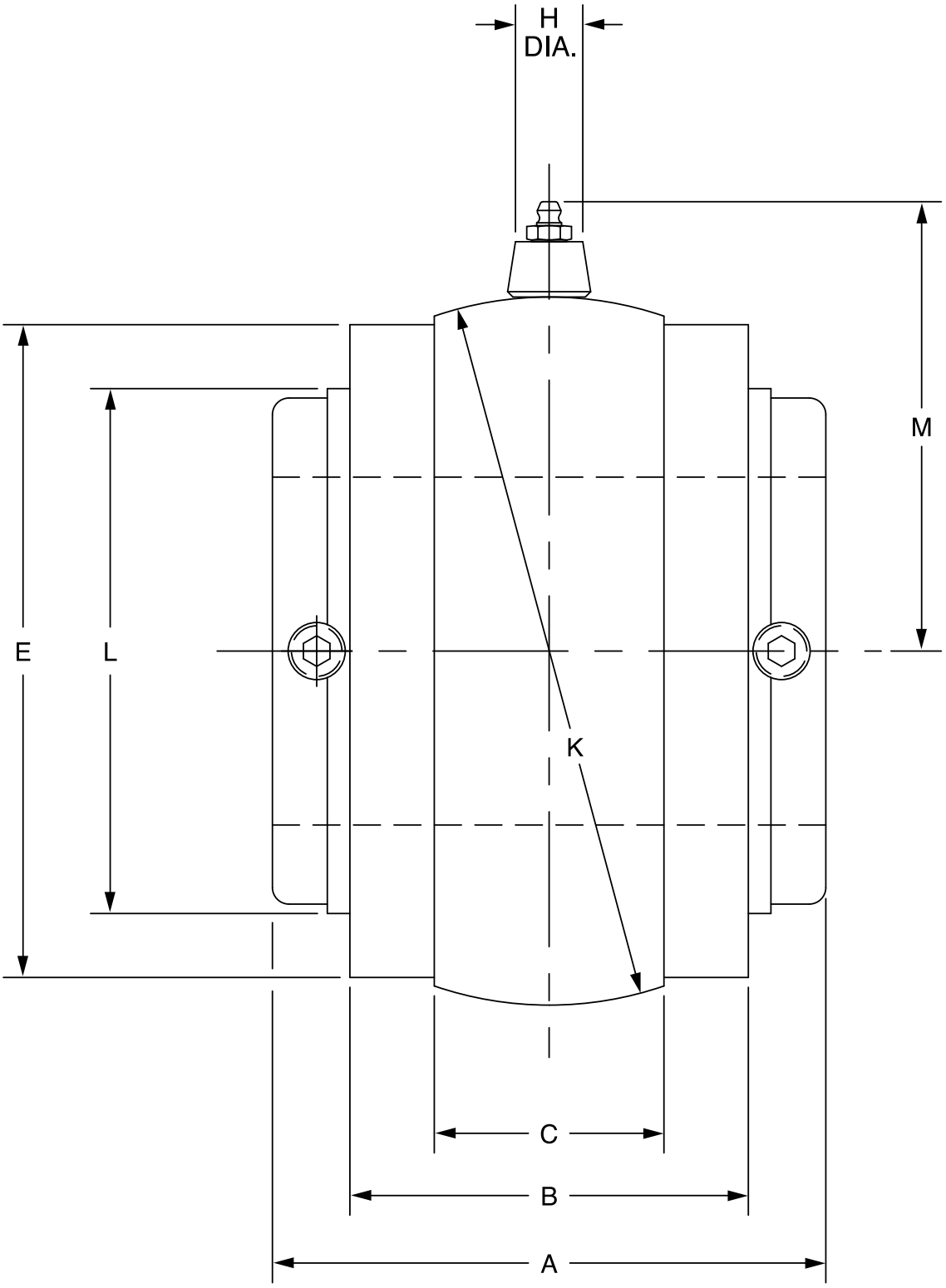



DOUBLE-INTERLOCK - Metric

Metric Double Interlock "S-1" Units - Fray Iron			
Shaft Size #	**Part Number**	**Part Name**	**Weight Lbs (Approx)**
35mm	**023700**	S1U-DI-035M	5
40mm	**023701**	S1U-DI-040M	6
45mm	**023702**	S1U-DI-045M	8
50mm	**023703**	S1U-DI-050M	8
55mm	**023704**	S1U-DI-055M	10
60mm	**023705**	S1U-DI-060M	11
65mm	**023706**	S1U-DI-065M	10
70mm	**023707**	S1U-D9-070M	17
75mm	**023708**	S1U-DI-075M	17
80mm	**023709**	S1U-DI-080M	33
85mm	**023710**	S1U-DI-085M	32
90mm	**023711**	S1U-DI-090M	31
100mm	**023712**	S1U-DI-100M	42
110mm	**023713**	S1U-D1-110M	55
115mm	**023714**	S1U-DI-115M	71
125mm	**023715**	S1U-DI-125M	85

For housing references see the following pages: Pillow Blocks (B10-22 - B10-25) Flange Bearings (B10-26 - B10-29)

Shaft Size (mm)	**A**	**B**	**C**	**E**		**H Dia**	**K**	**L**	**M**
				Mach Size	**Cast Size**				
35mm	3.00	2.063	1.156	3.250	3-5/16	0.688	3.625 ✳	2.750	2.640
40mm	3.375	2.313	1.188	3.750	3-13/16	0.688	4.125 ✳	3.188	2.890
45mm 50mm	3.500	2.875	1.500	4.125	4-3/16	0.688	4.562 ✳	3.438	3.100
55mm	3.750	2.563	1.563	4.500	4-5/8	0.688	5.000 ✳	3.750	3.320
60mm 65mm	4.000	2.750	1.438	4.812	4-7/8	0.688	5.186 ✳	4.063	3.410
70mm 75mm	4.500	3.000	1.875	5.563	5-5/8	0.688	6.061 ✳	4.719	3.850
80mm 85mm 90mm	5.000	3.500	2.00	6.813	6-7/8	0.688	7.373#	5.531	4.510
100mm	6.250	4.500	2.375	7.438	7-1/2	0.313	7.997#	6.125	5.160
110mm 115mm	6.750	4.625	2.375	8.313	8-3/8	0.313	8.872#	6.438	5.600
125mm	7.250	5.125	2.875	9.563	9-5/8	0.313	10.184#	7.438	6.260

All Dimensions Are Shown In Inches

✳ +.000 to -.001"
+/-.0005"

NOTES



CONTENTS

Specialty Tapered Products

Features / Benefits

- Type C B11-2
- Special Duty, Hinged Cap. B11-3
- All Steel B11-4

Specifications

- Type C B11-5
- Special Duty, Hinged Cap & Traction Wheel B11-20
- All Steel B11-46

How to Order

- Type C B11-6
- Special Duty, Hinged Cap. B11-21
- All Steel B11-47

Nomenclature

- Type C B11-6
- Special Duty, Hinged Cap & Traction Wheel B11-22
- All Steel B11-48

Selection

- Type C B11-7
- Special Duty, Hinged Cap & Traction Wheel B11-23
- All Steel B11-49

Selection / Dimensions

- Type C
  - Pillow Block B11-8
  - Flanges B11-12
  - Units B11-14
  - Take-Ups B11-16
  - Hanger Bearings. B11-18
- Special Duty
  - Pillow Blocks B11-30
  - Flanges B11-36
  - Units B11-38
  - Hinged Caps. B11-42
  - Traction Wheel B11-45
- All Steel
  - Pillow Blocks B11-54
  - Cartridge Units B11-56

Part Number Index INDEX-1

Key Word Index. KEYWORD-1

FEATURES/BENEFITS

Specialty Tapered Products
TYPE C

- Positive Concentric Clamp Sleeve Mounting
- Steel Multiple Labyrinth Seals
- 2 Quality Single Row
- Tapered Roller Assemblies
- Rugged Two-Piece Housing
- Elongated Bolt Holes

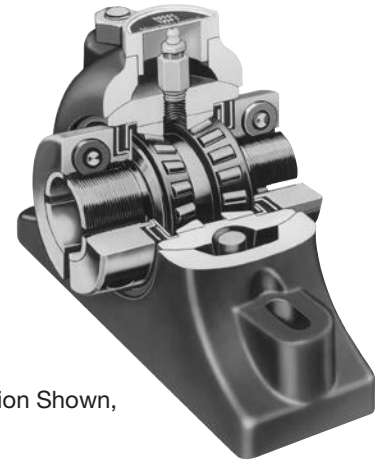

2-1/2" to 5" NE Construction Shown, Expansion also Available





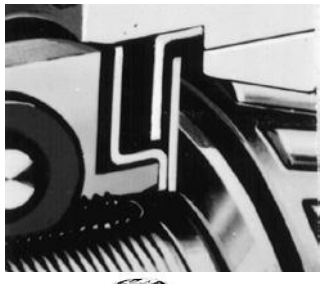



CLAMP SLEEVE MOUNTING -

- Two quality single row tapered bearings press fitted on sleeve
- Outer races shouldered against rib in housing
- Offers improved concentricity over other collar mounted types of bearings
- Best bearing unit for wheel or sprocket applications
- Two piece split collars used on 2-1/2" and larger sizes
- Single piece split collars, used on smaller sizes
- Performs flinger like function keeping many materials away from seal

STEEL MULTIPLE LABYRINTH SEALS

- Combine with collars offering excellent resistance to keep contaminants out of the bearing
- Seal bearing both on and off the shaft before, during and after installation
- Especially well suited on applications where dirt and dust are severe

RUGGED TWO PIECE OUTER HOUSING

- Split housing of heavy duty gray iron construction houses completely assembled inner unit
- Elongated bolt holes provide lateral adjustment for ease of installing pillow blocks

NOTE: Instruction manuals for Dodge bearings are available on www.dodge-pt.com

FEATURES/BENEFITS

Specialty Tapered Products
SPECIAL DUTY

- Quality Duplex Tapered Roller Bearing
- Tapered Adapter Sleeve Mounting
- Effective Piston Ring Seals
- Rugged Two-Piece Housing
- Elongated Bolt Holes

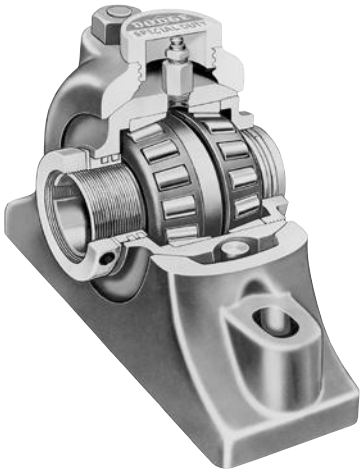

1-3/8” to 3-1/2” NE Type Construction Shown

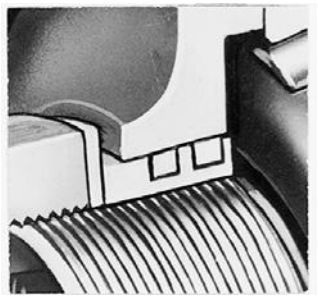

SPECIAL DUTY PILLOW BLOCKS DUAL PISTON RING SEALS -

- Contained within self aligning inner unit, to be unaffected by misalignment
- Seal bearing both on and off the shaft before, during and after installation
- Extremely close clearances to exclude most materials from entering bearings



TAPERED ADAPTER SLEEVE MOUNTING

- A split tapered adapter sleeve extending thru the entire length of the pillow block is used to securely fasten the bearing to the shaft tighter than shorter adapter sleeves
- A single adapter nut is used on sizes 3-1/2” and smaller with two adapter nuts being used on the larger sizes. The adapter nut at the large end of the taper can be used to remove the bearing from the shaft



DUPLEX TAPERED ROLLER BEARING

- Uses case hardened inner race, outer races and rollers with adapter sleeve mounting resulting in unsurpassed load handling capability and longer useful bearing life
- Handles any combination of radial and thrust load from 100% radial load to 100% thrust load



RUGGED TWO PIECE OUTER HOUSING

- Split housing of heavy duty gray iron construction houses completely assembled inner unit
- Elongated bolt holes provide lateral adjustment for ease of installing pillow blocks

FEATURES/BENEFITS

Specialty Tapered Products
ALL STEEL

- Quality Duplex Tapered Roller Bearing
- Tapered Adapter Sleeve Mounting
- Dual Piston Ring Seals
- Solid One-Piece Cast Steel Housing





DUPLEX TAPERED ROLLER BEARING

- Uses case hardened inner race, outer races and rollers with adapter sleeve mounting resulting in unsurpassed load handling capability and longer useful bearing life.
- Handles any combination of radial and thrust load from 100% radial load to 100% thrust load



TAPERED ADAPTER SLEEVE MOUNTING

- A split tapered adapter sleeve extending thru the entire length of the pillow block is used to securely fasten the bearing to the shaft tighter than shorter adapter sleeves
- Two ductile iron adapter nuts are used with the All Steel pillow blocks. The adapter nut at the small end of the taper is used to tighten the bearing to the shaft with the adapter nut at the large end of the taper used to remove the bearing from the shaft.

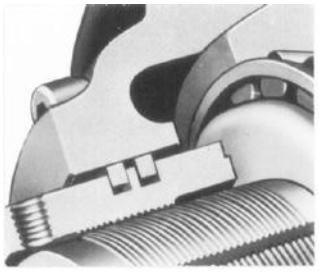

DUAL PISTON RING SEALS

- Dual piston ring seals are housed in accurately machined grooves in the adapter nuts resulting efficient labyrinth sealing action throughout the full range of misalignment.
- Seal bearing both on and off the shaft before, during and after installation



RUGGED TWO PIECE OUTER HOUSING

- Vertically split housing of heavy duty cast steel ribbed construction houses duplex tapered roller bearing.
- Elongated bolt holes provide lateral adjustment for ease of installing pillow blocks

SPECIFICATION

Type C

The standard housing material for Type C mounted bearings is ASTM A48 Class 30 Iron having a minimum tensile strength of 30,000 psi. The outer housings for the pillow blocks and flange bearings are of split construction for ease of replacement of the completely assembled, adjusted and lubricated inner units. The housings for the take-ups, hanger bearings, D, S-1 and B-1 units are of solid one piece construction. Pillow blocks and flange bearings are available in both expansion and non-expansion styles. Take up and hanger bearings are available as non expansion only.

The Type C mounted bearing has indirect mounted tapered roller bearings press fitted on a common sleeve with the outer race shouldered against a rib in the housing. The tapered roller bearings used in the Type C mounted bearings all have case carburized inner races (cones), outer races (cups) and rollers.

The Type C bearing is mounted to the shaft by clamping the sleeve to the shaft at the slotted threaded end of the sleeve with flinger collars. These collars are one piece construction for sizes thru 2-1/2", with larger sizes using collars of two piece construction. The bearing rating for the type C is determined by the sleeve resulting in a L_{10} life at maximum speed of at least 100,000 hours.

Steel multiple labyrinth seals are used to offer extra resistance to keep contaminants out of the bearing before, during, and after installation.



TYPE C AVAILABLE IN

PILLOW BLOCKS, 2 BOLT BASE	1-3/16" TO 3-7/16"
PILLOW BLOCKS, 4 BOLT	2-3/8" TO 4-15/16"
FLANGE BEARINGS 4 BOLT	1-3/16" TO 3-7/16"

ALL IN EITHER EXPANSION OR NON-EXPANSION



HANGER BEARINGS	1-15/16" TO 3-7/16"
TAKE-UP BEARINGS	1-3/16" TO 2-15/16"











D, S-1 OR B-1 UNITS 1-3/16" TO 4-15/16"

FEATURES/BENEFITS PAGE B11-2	HOW TO ORDER/NOMENCLATURE PAGE B11-6	EASY SELECTION PAGE B11-7	SELECTION/DIMENSIONS PAGE B11-8

HOW TO ORDER/NOMENCLATURE

HOW TO ORDER
Type C

There are two ways to specify DODGE Bearings. Most of the product offering have part numbers with listings shown throughout this catalog. Use of part numbers ensures accurate order processing.

When part numbers are not shown, the product may be specified by description or part name. This method is used when ordering units that include modifications or options. To order by description, use the nomenclature key shown below and add any special instructions to the end of the description for options not covered by the nomenclature.

Special Bearing Requirements And Special Lubricants

DODGE Type C Bearings are factory adjusted and pre-lubricated. For applications where extreme ambient temperatures, high speeds or high loads are expected, a variety of specialty lubricants and adjustments are available. Standard grease provided is Mobil Grease XHP222. Special lubricant options usually involve set-up charges and premiums. To order, specify type of lubricant required at the end of the product name or after the standard part number.

Example:

065294 except with Mobil Grease HTS #2 grease

or

P2B-C-207 except with Mobil Grease HTS #2 grease

Other Special Requirements Not Listed

For applications requiring modifications not listed, we encourage you to contact our Customer Order Engineering Department for Bearings at 864-284-5700.

NOMENCLATURE
Specialty Tapered Products
Type C, Special Duty and All Steel

P2B - C - 207 - E

HOUSING STYLE STYLE

P2B = PILLOW BLOCK
2 BOLT, CAST IRON

P4B = PILLOW BLOCK
4 BOLT, CAST IRON

SP4B = PILLOW BLOCK
4 BOLT, CAST STEEL

F4B = FLANGE BEARING
4 BOLT, CAST IRON

B1U = B-1 UNIT, CAST IRON

DU = D UNIT, CAST IRON

S1U = S-1 UNIT, CAST IRON

CRT = CARTRIDGE UNIT
DUCTILE IRON END PLATES

NSTU = NARROW SLOT TAKE UP
BEARING, CAST IRON

HNG = HANGER BEARING CAST IRON

BEARING TYPE

C = TYPE C

SD = SPECIAL DUTY

HC = HINGED CAP

TRW - TRACTION WHEEL

AS = ALL STEEL

SIZE

INCHES & 16TH
2 = 2 INCHES
07 = 7/16 INCHES
OR
207 = 2-7/16”

OTHER DATA

E = EXPANSION
TYPE BEARING

IF E DOES NOT APPEAR AFTER SEAL TYPE, THEN BEARING IS NON-EXPANSION TYPE



Type C

Type C Bearing

The capacity of the Type C bearing is designed to handle loads normally imposed on the shaft. However, due to the assembly method and method of fastening the bearing to the shaft, there are necessary clearances between the sleeve and the shaft except at the two ends. Consequently, under heavy loads a flexing and stressing of the sleeve will take place as the shaft rotates. For this reason, the Radial Load Ratings shown in Table 1 are based on the sleeve capacity under maximum clearance conditions rather than on the capacity of the roller bearings themselves.

Sleeve capacity being independent of speed, the table gives maximum recommended bearing loads at all allowable speeds and is based on the use of shafting tolerances from Table 18 on page B20-14.

Type C bearings are primarily utilized on radial load applications. They have ample thrust capacity for use as the locating bearing normally encountered with this type service. If heavy thrust loads are involved, Application Engineering should be contacted for a review of the application. The maximum thrust load should not exceed Type C pillow block limits shown in Table 3.

Since these ratings are considerably less than the base bearing ratings, the resulting life expectancy is, for all practical purposes, contingent only on proper lubrication.

Table 1: Type C Radial Load Ratings

Shaft Size Inches	Radial Load Rating (Lbs.) *	Max. RPM	Shaft Size Inches	Radial Load Rating (Lbs.) *	Max. RPM
1-3/16 - 1-7/16	725	3000	2-1/2 - 2-15/16	3000	1750
1-1/2 - 1-3/4	1000	3000	3 - 3-7/16	4000	1500
1-15/16	1350	2500	3-1/2 - 4	5500	1250
2 - 2-1/4	1700	2500	4-7/16 - 4-1/2	6500	1000
2-3/8 - 2-7/16	2100	2000	4-15/16 - 5	7500	750

* More than 100,000 L_{10} hours life at Max. RPM listed.

Table 2: Type C Expansion Capability, Inches

Shaft Size, Inches	Type C		
	2-Bolt Pillow Block	4-Bolt Pillow Block	Flange
1-3/16 - 1-7/16	3/16	--	3/16
1-1/2 - 1-3/4	5/8	--	1/4
1-15/16	5/8	--	1/4
2 - 2-1/4	5/8	--	1/4
2-3/8 - 2-7/16	5/8	5/8	1/4
2-1/2 - 2-15/16	3/4	5/8	5/8
3 - 3-7/16	3/4	3/4	1/4
3-1/2 - 4	--	3/4	1/4
4-7/16 - 4-1/2	--	3/4	5/8
4-15/16 - 5	--	3/4	5/8

Table 3: Type C Pillow Block Permissible Thrust Load

Shaft Size, Inches	Thrust loads, lbs		Shaft Size, Inches	Thrust loads, lbs	
	2-Bolt	4-Bolt		2-Bolt	4-Bolt
1-3/16 - 1-7/16	3000	--	2-1/2 - 2-15/16	6900	9300
1-1/2 - 1-3/4	3150	--	3 - 3-7/16	5700	12000
1-15/16	5000	--	3-1/2 - 4	--	12000
2 - 2-3/16	5000	--	4-7/16 - 4-1/2	--	12000
2-3/8 - 2-7/16	7300	10000	4-15/16 - 5	--	16500

* The limits in above apply to pillow blocks. For thrust loads larger than listed or heavy thrust loading on other style housings, contact DODGE Engineering for recommendation.

SELECTION/DIMENSIONS

Type C Pillow Block - Inch
2-BOLT BASE

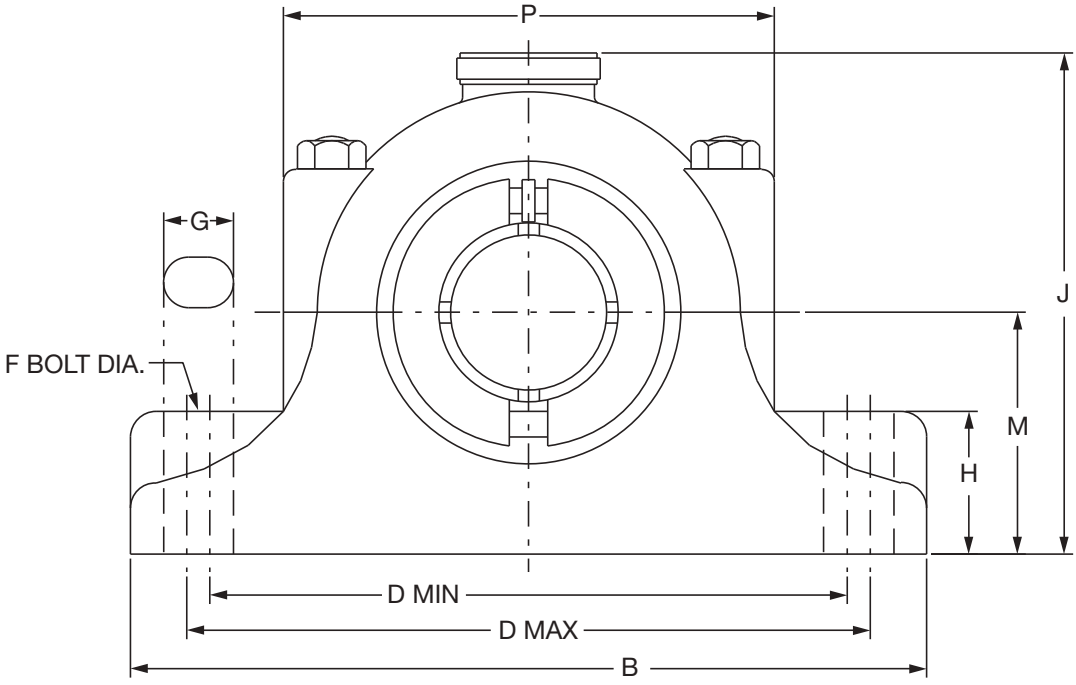

NOTE: All sizes use a 1/8 - 27 NPT hydraulic grease fitting

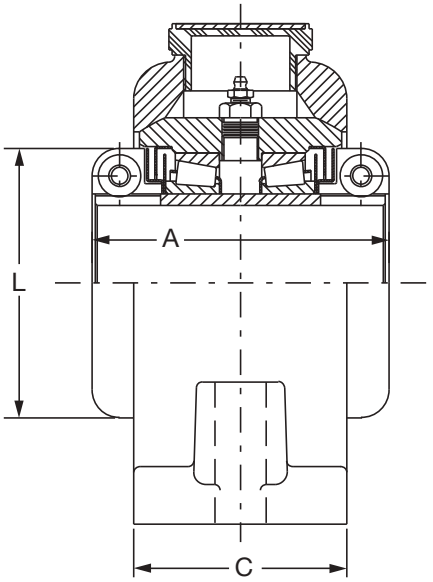

NON-EXPANSION CONSTRUCTION

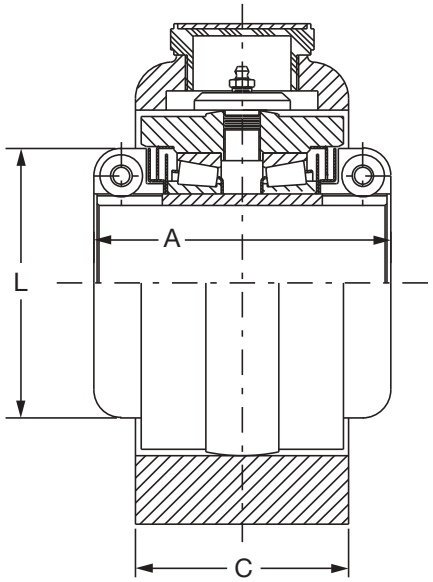

EXPANSION CONSTRUCTION



Type C Pillow Block - Inch
2-BOLT BASE

Gray Iron Non-Expansion*				Gray Iron Expansion			
Shaft Size Inches#	Part Number	Part Name	Weight Lbs (Approx)	Shaft Size Inches#	Part Number	Part Name	Weight Lbs (Approx)
1-3/16	**065289**	P2B-C-103	21	1-3/16	**087262**	P2B-C-103E	22
1-1/4	**065311**	P2B-C-104	20	1-1/4	**087263**	P2B-C-104E	22
1-7/16	**065290**	P2B-C-107	20	1-7/16	**087180**	P2B-C-107E	20
1-1/2	**065312**	P2B-C-108	28	1-1/2	**087264**	P2B-C-108E	28
1-11/16	**065291**	P2B-C-111	28	1-11/16	**087181**	P2B-C-111E	28
1-3/4	**065238**	P2B-C-112	26	1-3/4	**087172**	P2B-C-112E	28
1-15/16	**065292**	P2B-C-115	29	1-15/16	**087182**	P2B-C-115E	29
2	**065313**	P2B-C-200	47	2	**087265**	P2B-C-200E	49
2-3/16	**065293**	P2B-C-203	47	2-3/16	**087183**	P2B-C-203E	49
2-1/4	**065314**	P2B-C-204	47	2-1/4	**087266**	P2B-C-204E	49
2-7/16	**065294**	P2B-C-207	57	2-7/16	**087184**	P2B-C-207E	57
2-1/2	**065315**	P2B-C-208	83	2-1/2	**087267**	P2B-C-208E	90
2-11/16	**065295**	P2B-C-211	83	2-11/16	**087185**	P2B-C-211E	90
2-7/8	**065244**	P2B-C-214	83	2-7/8	**087178**	P2B-C-214E	90
2-15/16	**065296**	P2B-C-215	83	2-15/16	**087186**	P2B-C-215E	90
3	**065316**	P2B-C-300	132	3	**087268**	P2B-C-300E	135
3-3/16	**065317**	P2B-C-303	132	3-3/16	**087269**	P2B-C-303E	135
3-7/16	**065297**	P2B-C-307	128	3-7/16	**087187**	P2B-C-307E	131

* Furnished Unless Otherwise Specified

Consult Dodge For Sizes Not Listed.

Consult Dodge For Sizes Not Listed.

Shaft Size Inches	A	B*	C*	D		F Bolt Dia.	G*	H*	J	L Δ	M	P*	EXP**
				Min.	Max.								
1-3/16 1-1/4 1-7/16	4.50	9.00	3.00	6.88	7.63	1/2	1.00	2.13	6.25	3.09	2.88	5.88	3/16
1-1/2 1-11/16 1-3/4	4.88	9.50	3.38	7.38	8.13	1/2	0.81	2.38	6.81	3.50	3.13	6.50	5/8
1-15/16	5.25	11.00	3.50	8.50	9.00	5/8	1.25	2.50	7.13	3.88	3.25	7.38	5/8
2 2-3/16 2-1/4	5.75	12.00	4.00	9.25	10.25	5/8	1.18	2.88	8.00	4.38	3.75	8.00	5/8
2-7/16	6.00	13.25	4.25	10.13	11.38	3/4	1.50	3.00	8.56	4.66	4.00	8.88	5/8
2-1/2 2-11/16 2-7/8 2-15/16	6.50	14.25	4.75	11.13	12.38	3/4	1.50	3.75	9.88	5.44	4.75	9.88	3/4
3 3-3/16 3-7/16	7.00	16.75	5.50	13.75	14.25	7/8	1.50	4.00	11.38	5.94	5.50	11.63	3/4

NOTE: All sizes use a 1/8 - 27 NPT hydraulic grease fitting

Δ A One-piece Collar Furnished Up Thru 2-7/16 Sizes. Larger Sizes Use A Two-piece Collar.

* These Are As Cast Surfaces. Dimensions May Fluctuate Due To Draft Angles And Pattern Shifts

** EXP - Total Expansion For Expansion Bearing Only

FEATURES/BENEFITS PAGE B11-2	SPECIFICATIONS PAGE B11-5	HOW TO ORDER/NOMENCLATURE PAGE B11-6	SELECTION PAGE B11-7

SELECTION/DIMENSIONS

Type C Pillow Block - Inch
4-BOLT BASE

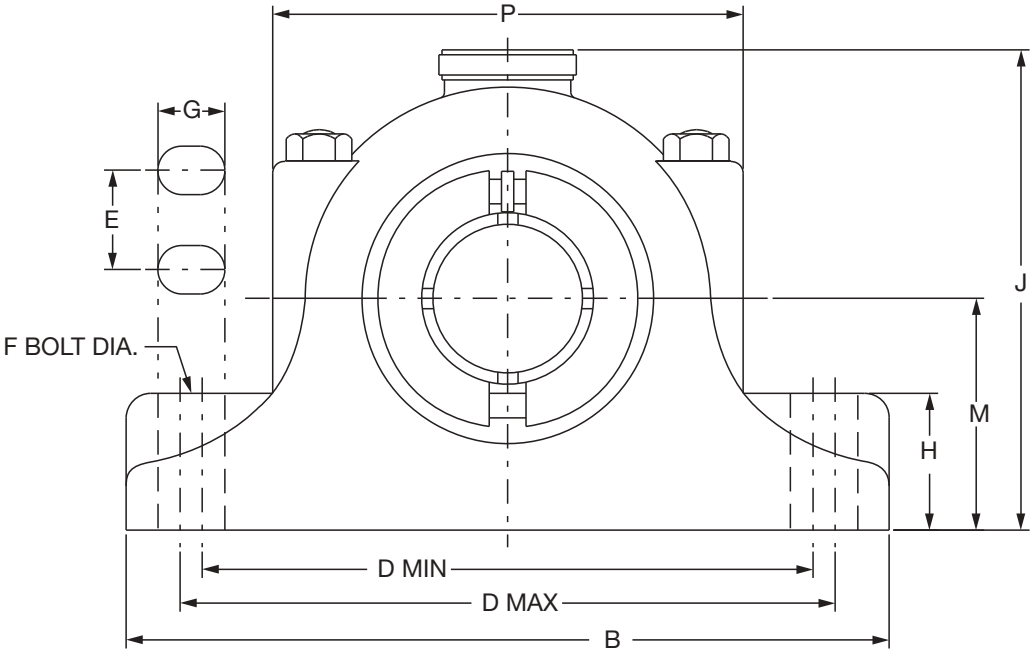

NOTE: All sizes use a 1/8 - 27 NPT hydraulic grease fitting

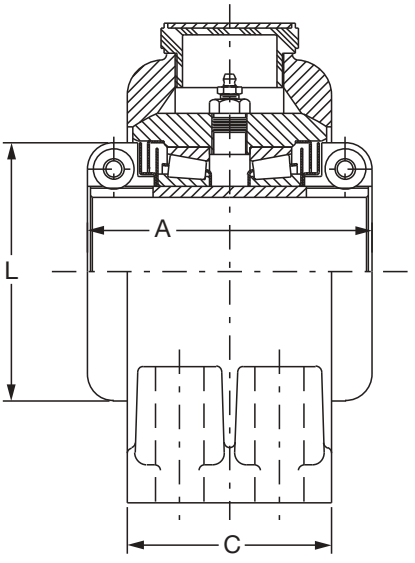

NON-EXPANSION CONSTRUCTION

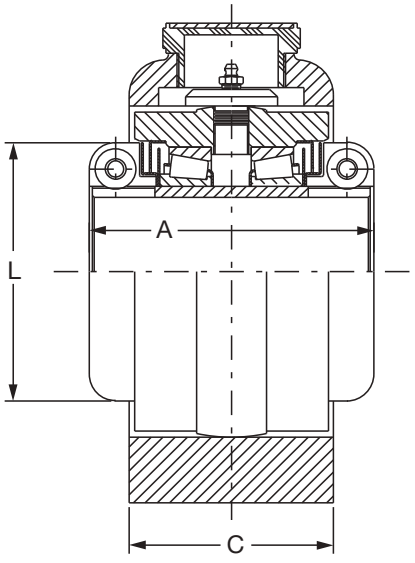

EXPANSION CONSTRUCTION



Type C Pillow Block - Inch
4-BOLT BASE

Gray Iron Non-Expansion*				Gray Iron Expansion			
Shaft Size Inches#	Part Number	Part Name	Weight Lbs (Approx)	Shaft Size Inches#	Part Number	Part Name	Weight Lbs (Approx)
2-7/16	**065310**	P4B-C-207	59	2-7/16	**087191**	P4B-C-207E	59
2-15/16	**065302**	P4B-C-215	85	2-15/16	**087192**	P4B-C-215E	85
3-7/16	**065303**	P4B-C-307	130	3-7/16	**087193**	P4B-C-307E	135
3-15/16	**065298**	P4B-C-315	230	3-15/16	**087188**	P4B-C-315E	230
4-7/16	**065299**	P4B-C-407	280	4-7/16	**087189**	P4B-C-407E	290
4-15/16	**065300**	P4B-C-415	370	4-15/16	**087190**	P4B-C-415E	380

* Furnished Unless Otherwise Specified

\# Consult Dodge For Sizes Not Listed.

Consult Dodge For Sizes Not Listed.

Shaft Size Inches	A	B*	C*	D		E	F Bolt Dia.	G*	H*	J	L Δ	M	P*	Exp**
				Min.	Max.									
2-7/16	6.00	13.25	4.25	10.00	11.50	2.50	5/8	1.50	3.00	8.50	4.66	4.00	8.88	5/8
2-15/16	6.50	14.25	4.75	11.00	12.50	2.75	5/8	1.50	3.75	9.88	5.44	4.75	9.88	5/8
3-7/16	7.00	16.75	5.50	12.88	14.63	3.25	3/4	1.50	4.00	11.38	5.94	5.50	11.63	3/4
3-15/16	9.50	19.00	7.00	15.00	16.00	3.25	7/8	1.50	4.00	13.38	7.38	6.38	13.88	3/4
4-7/16	10.00	20.00	7.50	15.63	17.38	3.50	7/8	1.88	4.00	14.50	8.38	7.25	15.25	3/4
4-15/16	11.25	23.00	8.25	17.75	19.75	3.75	1	2.13	4.25	15.63	9.38	7.50	16.75	3/4

NOTE: All sizes use a 1/8 - 27 NPT hydraulic grease fitting

Δ A One-piece Collar Furnished Up Thru 2-7/16 Sizes. Larger Sizes Use A Two-piece Collar.

* These Are As Cast Surfaces. Dimensions May Fluctuate Due To Draft Angles And Pattern Shifts

** EXP - Total Expansion For Expansion Bearing Only

SELECTION/DIMENSIONS

Type C Flange Bearing - Inch

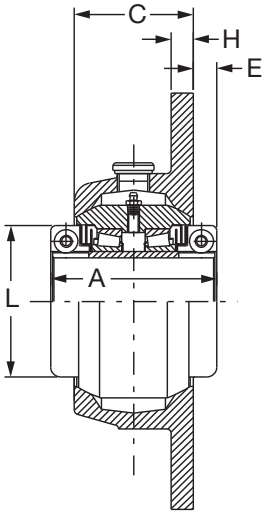

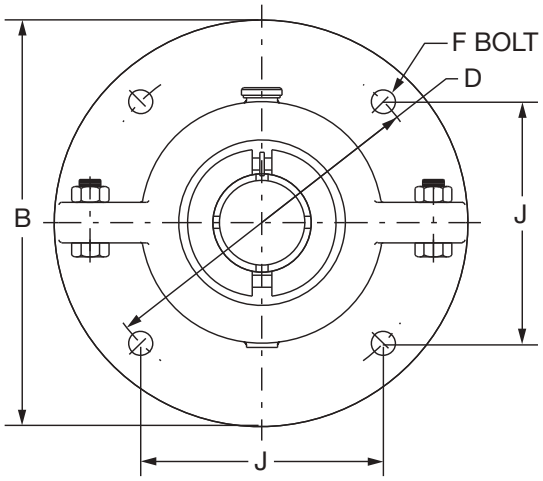

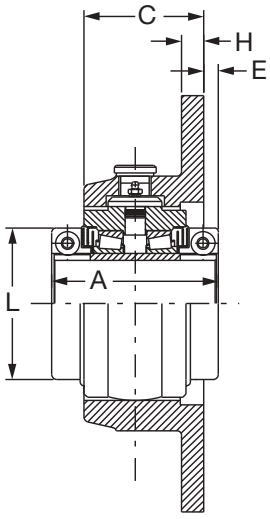

NON-EXPANSION CONSTRUCTION

EXPANSION CONSTRUCTION



Type C Flange Bearing - Inch

Gray Iron Non-Expansion*				Gray Iron Expansion			
Shaft Size Inches#	Part Number	Part Name	Weight Lbs (Approx)	Shaft Size Inches#	Part Number	Part Name	Weight Lbs (Approx)
1-7/16	**104040**	F4B-C-107	21	1-7/16	**104050**	F4B-C-107E	21
1-11/16	**104041**	F4B-C-111	31	1-11/16	**104051**	F4B-C-111E	31
1-3/4	**104106**	F4B-C-112	31	1-3/4	**104078**	F4B-C-112E	31
1-15/16	**104042**	F4B-C-115	37	1-15/16	**104052**	F4B-C-115E	38
2-3/16	**104043**	F4B-C-203	49	2-3/16	**104053**	F4B-C-203E	49
2-7/16	**104044**	F4B-C-207	63	2-7/16	**104054**	F4B-C-207E	63
2-15/16	**104045**	F4B-C-215	98	2-15/16	**104055**	F4B-C-215E	98
3	**104119**	F4B-C-300	140	3	**104090**	F4B-C-300E	140
3-7/16	**104046**	F4B-C-307	140	3-7/16	**104056**	F4B-C-307E	140

* Furnished Unless Otherwise Specified

\# Consult Dodge For Sizes Not Listed.

Consult Dodge For Sizes Not Listed.

Shaft Size Inches	A	B	C	D	E	F Bolt Dia.	H	J	L Δ	Exp*
1-7/16	4.50	8.25	3.00	7.00	0.75	1/2	0.63	4.95	3.09	3/16
1-11/16 1-3/4	4.88	9.00	3.38	7.63	0.75	1/2	0.69	5.39	3.50	1/4
1-15/16	5.25	10.00	3.50	8.38	0.88	5/8	0.75	5.92	3.88	1/4
2-3/16	5.75	10.75	4.00	9.13	0.88	5/8	0.81	6.45	4.38	1/4
2-7/16	6.00	12.00	4.25	10.25	0.88	3/4	0.88	7.25	4.66	1/4
2-15/16	6.50	13.00	4.63	11.25	0.94	3/4	1.00	7.96	5.44	5/8
3	7	14.50	5.375	12.5	0.81	7/8	1.13	8.839	5.94	1/4
3-7/16										

Δ A One-Piece Collar Furnished Up Thru 2-7/16 Sizes.
Larger Sizes Use A Two-Piece Collar.

* EXP - Total Expansion For Expansion Bearing Only.

FEATURES/BENEFITS PAGE B11-2	SPECIFICATIONS PAGE B11-5	HOW TO ORDER/NOMENCLATURE PAGE B11-6	SELECTION PAGE B11-7

SELECTION/DIMENSIONS

Type C Units - Inch

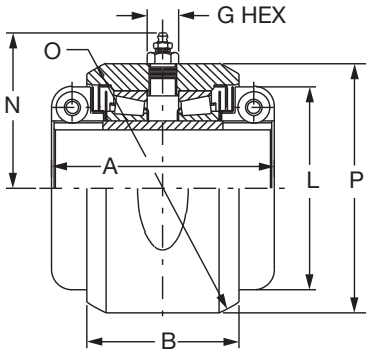

D UNIT
USED IN NON-EXPANSION HOUSINGS

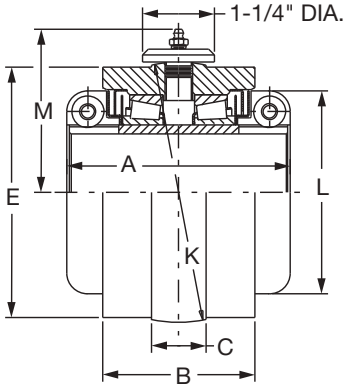

S-1 UNIT
USED IN EXPANSION HOUSINGS

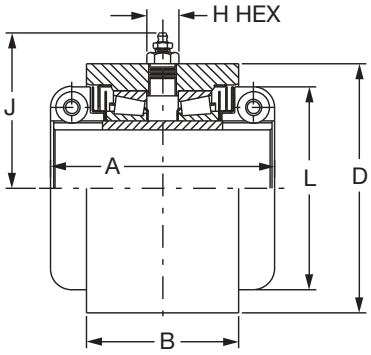

B-1 UNIT
USED IN CUSTOMER MANUFACTURED HOUSINGS

Type C Units - Inches

Shaft Size Inches #	D Units		S-1 Units		B-1 Units		Weight Lbs (Approx)
	Part Number	Part Name	Part Number	Part Name	Part Number	Part Name	
1-7/16	**065282**	DU-C-107	**087199**	S1U-C-107	**069060**	B1U-C-107	7
1-1/2	**065258**	DU-C-108	**087205**	S1U-C-108	**- - - -**	- - - -	11
1-11/16	**065283**	DU-C-111	**087200**	S1U-C-111	**069061**	B1U-C-111	11
1-3/4	**065260**	DU-C-112	**087207**	S1U-C-112	**- - - -**	- - - -	11
1-15/16	**065284**	DU-C-115	**087194**	S1U-C-115	**069062**	B1U-C-115	12
2	**065262**	DU-C-200	**087209**	S1U-C-200	**069034**	B1U-C-200	18
2-3/16	**065285**	DU-C-203	**087195**	S1U-C-203	**069063**	B1U-C-203	17
2-1/4	**065265**	DU-C-204	**087215**	S1U-C-204	**- - - -**	- - - -	17
2-7/16	**065286**	DU-C-207	**087196**	S1U-C-207	**069064**	B1U-C-207	20
2-1/2	**- - - -**	- - - -	**- - - -**	- - - -	**069039**	B1U-C-208	35
2-11/16	**065268**	DU-C-211	**087218**	S1U-C-211	**- - - -**	- - - -	34
2-7/8	**065270**	DU-C-214	**087220**	S1U-C-214	**- - - -**	- - - -	34
2-15/16	**065287**	DU-C-215	**087197**	S1U-C-215	**069065**	B1U-C-215	34
3	**065271**	DU-C-300	**087221**	S1U-C-300	**- - - -**	- - - -	55
3-3/16	**- - - -**	- - - -	**087222**	S1U-C-303	**069045**	B1U-C-303	53
3-1/4	**- - - -**	- - - -	**- - - -**	- - - -	**069046**	B1U-C-304	53
3-7/16	**065288**	DU-C-307	**087198**	S1U-C-307	**069066**	B1U-C-307	51
3-1/2	**065274**	DU-C-308	**087224**	S1U-C-308	**- - - -**	- - - -	115
3-11/16	**- - - -**	- - - -	**087225**	S1U-C-311	**- - - -**	- - - -	115
3-15/16	**065304**	DU-C-315	**087210**	S1U-C-315	**069067**	B1U-C-315	115
4	**- - - -**	- - - -	**- - - -**	- - - -	**069069**	B1U-C-400	115
4-7/16	**065305**	DU-C-407	**087211**	S1U-C-407	**- - - -**	- - - -	138
4-15/16	**065306**	DU-C-415	**087212**	S1U-C-415	**- - - -**	- - - -	190

#Consult Dodge For Sizes Not Listed.



Type C Units - Inch

Shaft Size Inches	A	B	C	D**	E	G Hex	H Hex	J	K	L	M	N	O**	P
1-7/16	4.50	2.69	0.75	3.875	3.81	7/16	5/8	3.13	4.062	3.09	2.69	2.50	4.438	3.94
1-1/2 1-11/16 1-3/4	4.88	3.13	0.75	4.250	4.13	7/16	5/8	3.31	4.438	3.50	2.88	2.75	5.000	4.50
1-15/16	5.25	3.25	0.88	4.750	4.50	7/16	5/8	3.56	4.812	3.88	3.06	2.88	5.312	4.75
2 2-3/16 2-1/4	5.75	3.75	0.88	5.250	5.00	7/16	5/8	3.81	5.375	4.38	5.31	3.19	6.000	5.38
2-7/16	6.00	4.00	1.00	5.750	5.31	5/8	5/8	4.06	5.687	4.66	3.80	4.09	6.375	5.69
2-1/2 2-11/16 2-7/8 2-15/16	6.50	4.44	1.00	6.500	6.19	5/8	3/4	4.63	6.562	5.44	4.50	4.50	7.312	6.50
3 3-3/16 3-1/4 3-7/16	7.00	5.00	1.25	7.750	7.50	5/8	3/4	5.25	8.000	5.94	4.88	5.56	8.625	7.91
3-1/2 3-11/16 3-15/16 4	9.50	6.25	1.50	9.250	8.81	5/8	3/4	6.00	9.500	7.38	5.63	6.38	10.250	9.75
4-7/16	10.00	6.63	1.75	10.500	9.84	3/4	3/4	6.63	10.625	8.38	6.19	6.89	11.125	10.38
4-15/16	11.25	7.38	2.00	11.750	10.84	3/4	3/4	7.25	11.500	9.38	6.63	7.44	12.500	11.88

NOTE: All sizes use a 1/8 - 27 NPT hydraulic grease fitting

Δ A One-Piece Collar Furnished Up Thru 2-7/16 Sizes. Larger Sizes Use A Two-Piece Collar

** + .000 - .002

SELECTION/DIMENSIONS

Type C Take-Up Bearing

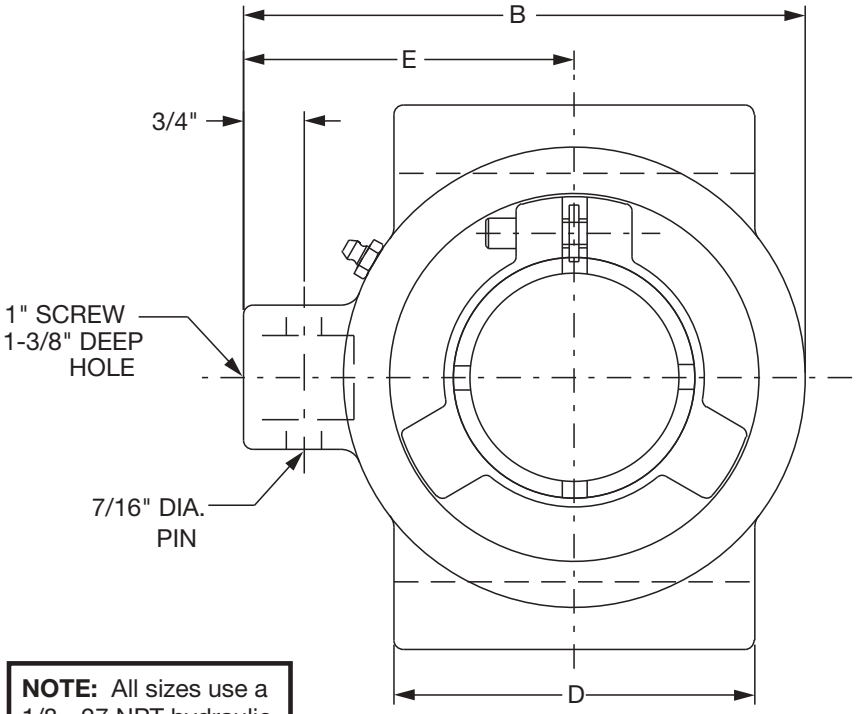

NOTE: All sizes use a 1/8 - 27 NPT hydraulic grease fitting

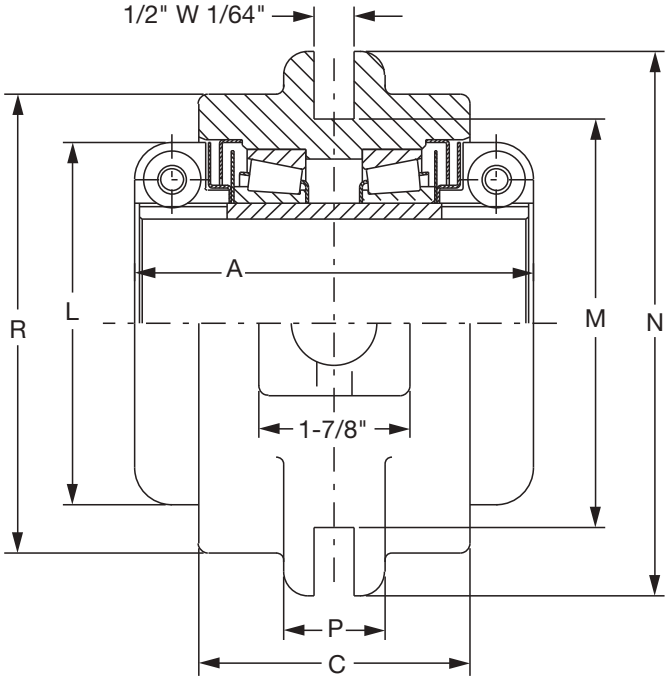



Type C Take-Up Bearing

Gray Iron			
Shaft Size Inches #	**Part Number**	**Part Name**	**Weight Lbs (Approx)**
1-7/16	**036116**	NSTU-C-107	12
1-1/2	**036054**	NSTU-C-108	15
1-15/16	**036118**	NSTU-C-115	18
2-3/16	**036119**	NSTU-C-203	26
2-7/16	**036120**	NSTU-C-207	27
2-15/16	**036121**	NSTU-C-215	37

Consult Dodge For Sizes Not Listed.

Shaft Size Inches	A	B	C	D	E	L	M	N	P	R
1-7/16	4.50	5.63	2.69	2.50	3.63	3.08	5.13	6.25	1.25	4.00
1-1/2	4.88	5.88	3.13	3.00	3.63	3.50	5.13	6.25	1.25	4.25
1-15/16	5.25	6.00	3.25	3.50	3.63	3.88	5.13	6.25	1.25	4.75
2-3/16	5.75	7.00	3.75	4.50	4.63	4.38	5.13	6.25	1.25	5.75
2-7/16	6.00	7.00	4.00	4.50	4.63	4.66	5.13	6.25	1.25	5.75
2-15/16	6.50	7.75	4.44	5.00	4.50	5.44	6.13	7.25	1.25	6.50

Note: All sizes use a 1/8-27 NPT hydraulic grease fitting

Bearing Reference Guide
E-Family Roller Bearings
Specialty Tapered Products
S-2000
UNISPHERE II
IMPERIAL
UNIFIED SAF

SELECTION/DIMENSIONS

Type C Hanger Bearing

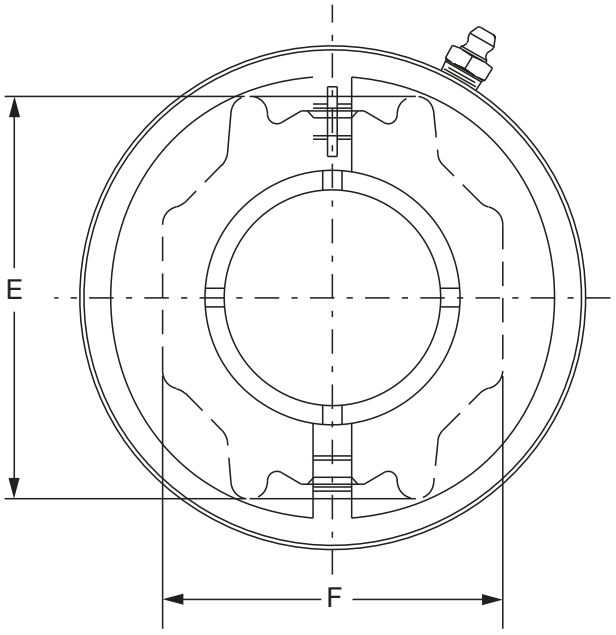

NOTE: All sizes use a 1/8 - 27 NPT hydraulic grease fitting

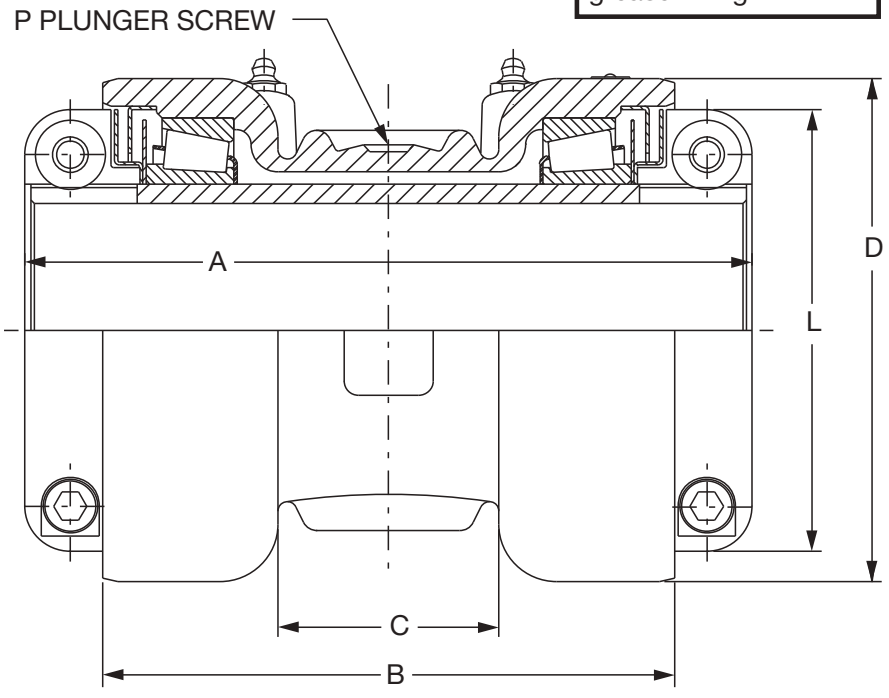



Type C Hanger Bearing

Gray Iron			
Shaft Size Inches #	**Part Number**	**Part Name**	**Weight Lbs (Approx)**
1-15/16	**061082**	HNG-C-115	16
2-3/16	**061083**	HNG-C-203	21
2-7/16	**061084**	HNG-C-207	30
2-11/16	**061085**	HNG-C-211	41
2-15/16	**061086**	HNG-C-215	40
3-7/16	**061087**	HNG-C-307	51

Consult Dodge For Sizes Not Listed.

Shaft Size Inches	A	B	C	D	E	F	L	P
1-15/16	8.25	6.25	2.75	4.63	3.38	2.94	3.88	5/8, 1-1/2
2-3/16	8.88	6.88	3.00	5.13	3.75	3.31	4.38	5/8, 1-1/2
2-7/16	9.63	7.63	3.00	5.38	4.13	3.50	4.66	5/8, 1-1/2
2-11/16 2-15/16	10.38	8.25	3.25	6.25	4.63	4.00	5.44	3/4, 2
3-7/16	11.25	9.25	4.00	6.75	5.13	4.50	5.94	3/4, 2-1/2

Note: All sizes use a 1/8-27 NPT hydraulic grease fitting

SPECIFICATION

Special Duty

The standard housing material for Special Duty mounted bearings is ASTM A48 Class 30 Iron having a minimum tensile strength of 30,000 psi. The outer housings for the pillow blocks and flange bearings are of split construction for ease of replacement of the completely assembled, adjusted and lubricated inner units. The housings for the D, S-1 and B-1 units are of solid one piece construction. Pillow blocks and flange bearings are available in both expansion and non expansion types.

Special Duty mounted bearings have duplex tapered roller mounted to the shaft with a tapered adaptor sleeve extending thru the complete length of the pillow block. The tapered roller bearings used in the Special Duty mounted bearings all have case carburized inner races (cone), outer races (cup) and rollers. A single adapter nut is used on sizes thru 3-1/2" with two adaptor nuts being used on the larger sizes. The nut at the large end of the taper can be used to remove the bearing from the shaft.

Special Duty mounted bearings have two piston ring seals running in grooves in the seal ring carriers at each end of the units to seal the bearings both on and off the shaft. Sizes thru 3-1/2" use a grooved seal ring carrier at one end and grooved adaptor at the opposite end for carrying the piston ring seals. Larger sizes have grooved adaptor nuts to carry the piston ring seals.

SPECIAL DUTY (Hinged Cap Type)

The standard housing material for Special Duty hinged cap bearings is ASTM A48 Class 30 Iron having a minimum tensile strength of 30,000 psi. The housing is equipped with a brass hand wheel for ease of removal of the S-1 unit from the pillow block housing. Hinged cap pillow blocks are available in both expansion and non-expansion types.

Hinged cap pillow blocks and units are mounted to the shaft with a tapered adapter sleeve extending completely thru the unit. The tapered adapter sleeve is equipped with micro mount removal screws for ease of demounting the bearing from the shaft.

The hinged cap pillow blocks are arranged for relubrication from the end of the pillow block rather than from the top of the pillow block. Besides the features specified above the hinged cap pillow blocks have many other features in common with the special duty mounted bearings.

TRACTION WHEEL

The traction wheel is to be equipped with a ductile iron (ASTM 536 grade 65-45-10) hub, having indirect mounted tapered roller bearings mounted to ASTI 1018 shafting secured in a support and having drops of 7-3/16", 8" and 10". Combination labyrinth and dynaface seals shall be used.

SPECIAL DUTY AVAILABLE IN



Pillow Blocks,
2-Bolt Base
1-3/8" To 3-1/2"

Pillow Blocks,
4-Bolt Base
2-1/4" To 12"



Flange
Bearings
4-Bolt
1-3/16" To 6"



All In Either Expansion Or Non-Expansion D, S1 & B1 Units 1-3/8" To 12"

Hinged Cap Pillow Blocks Available In Pillow Blocks,
2-Bolt Base
1-3/8" To 2-15/16"
All In Either Expansion Or Non-Expansion



Hinged Cap S-1 Units
1-3/8" To 2-15/16"



Traction Wheel

FEATURES/BENEFITS PAGE B11-3	HOW TO ORDER B11-21	SELECTION B11-23	SELECTION/DIMENSIONS PAGE B11-30



Special Duty

There are two ways to specify DODGE Bearings. Most of the product offering have part numbers with listings shown throughout this catalog. Use of part numbers ensures accurate order processing.

When part numbers are not shown, the product may be specified by description or part name. This method is used when ordering units that include modifications or options. To order by description, use the nomenclature key shown on the next page and add any special instructions to the end of the description for options not covered by the nomenclature.

SPECIAL BEARING REQUIREMENTS AND LUBRICANTS

DODGE Bearings are factory adjusted and pre-lubricated with lithium based NLGI Grade 2 grease. For applications where extreme ambient temperatures, high speeds or high loads are expected, a variety of specialty lubricants and adjustments are available. Special lubricant options usually involve set-up charges and premiums. To order, specify type of lubricant required at the end of the product name or after the standard part number.

Example:

066231 except with Mobilith SHC 460 grease and .012-.015 Lateral End Play

or

P4B-SD-215 except with Mobilith SHC 460 grease and .012-.015 Lateral End Play

OTHER SPECIAL REQUIREMENTS NOT LISTED

For applications requiring modifications not listed, we encourage you to contact out Customer Order Engineering Department for Bearings at 864-284-5700.

NOMENCLATURE

Specialty Tapered Products

P2B - SD - 207 - E

HOUSING STYLE STYLE

P2B = PILLOW BLOCK
2 BOLT, CAST IRON

P4B = PILLOW BLOCK
4 BOLT, CAST IRON

SP4B = PILLOW BLOCK
4 BOLT, CAST STEEL

F4B = FLANGE BEARING
4 BOLT, CAST IRON

B1U = B-1 UNIT, CAST IRON

DU = D UNIT, CAST IRON

S1U = S-1 UNIT, CAST IRON

CRT = CARTRIDGE UNIT
DUCTILE IRON END PLATES

NSTU = NARROW SLOT TAKE UP
BEARING, CAST IRON

HNG = HANGER BEARING CAST IRON

BEARING TYPE

C = TYPE C

SD = SPECIAL DUTY

HC = HINGED CAP

TRW - TRACTION WHEEL

AS = ALL STEEL

SIZE

INCHES & 16TH
2 = 2 INCHES
07 = 7/16 INCHES
OR
207 = 2-7/16”

OTHER DATA

E = EXPANSION
TYPE BEARING

IF E DOES NOT APPEAR AFTER SEAL TYPE, THEN BEARING IS NON-EXPANSION TYPE



Special Duty

SPECIAL DUTY-DOUBLE ROW TAPERED ROLLER BEARINGS

DODGE Special Duty Double Row Tapered Roller Bearings have the highest capacity of all DODGE Tapered Roller Bearings. They carry heavy radial loads and combined radial and thrust loads. The maximum recommended load which can be applied is limited by various components in the system such as bearing, housing, shaft, shaft attachment, speed and life requirements as listed in this catalog. DODGE Special Duty Tapered Roller Bearings have been applied successfully even when these limits have been exceeded under controlled operating conditions. Contact DODGE Application Engineering (864) 284-5700 for applications which exceed the recommendations of this catalog.

L_{10} Hours Life* --- The life which may be expected from at least 90% of a given group of bearings operating under identical conditions.

$$L_{10} = \left(\frac{C_{90}}{P}\right)^{10/3} X \left(\frac{1{,}500{,}000}{RPM}\right)$$

Where:

C_{90} = Dynamic Capacity (Table 4, pg. B11-25), lbs

P = Equivalent Radial Load, lbs.

GENERAL

Heavy Service --- For heavy shock loads, frequent shock loads, or severe vibrations, add up to 50% (according to severity of conditions) to the Equivalent Radial Load. Consult DODGE Application Engineering for additional selection assistance.

Thrust load values shown in the table below are recommended as a guide for general applications that will give adequate L_{10} life for pillow blocks. The maximum thrust load should not exceed values shown on Table 6. Where substantial radial load is also present, it is advisable to calculate actual L_{10} life to assure that it meets the requirements. The effectiveness of the shaft attachment to carry thrust load depends on proper tightening, shaft tolerance (see table below) and shaft deflections. Therefore, it is advisable to use auxiliary thrust carrying devices such as shaft shoulder, snap ring or a thrust collar to locate the bearing under thrust loads heavier than shown below, or where extreme reliability is desired.

RPM RANGE	20-200	201-2000	Over 2000
Recommended Thrust Load	$C_{90}/4$	$C_{90}/8$	$C_{90}/12$

The shaft tolerances recommended below are adequate for normal radial and radial/thrust load applications. Since the allowable load, especially at a low speed, is very large, the shaft should be checked to assure adequate shaft strength.

The magnitude and direction of both the thrust and radial load must be taken into account when selecting a housing. **When pillow blocks are utilized, heavy loads should be directed through the base. Where uplift loads are involved, see Table 9, pg. B11-29 for maximum values.** Where a load pulls the housing away from the mounting base, both the hold-down bolts and housing must be of adequate strength. Auxiliary load carrying devices such as shear bars are advisable for side or end loading of pillow blocks and radial load for flange units.

Shaft Size	Tolerance, Inches
Up To 1-1/2"	+.000-.002"
1-9/16 To 2-1/2"	+.000 -.003"
2-1/2 To 4"	+.000-.004"
4-3/16 To 6"	+.000-.005"
6-7/16 To 8"	+.000-.006"

L_{10} Life Adjustment - The calculated L_{10} Life obtained from this procedure is subject to life adjustment factors in accordance with ABMA standards described on page B16-9. Consult Application Engineering for assistance.

SELECTING BEARINGS SUPPORTING RADIAL LOADS ONLY

1. Define L_{10} Life Hours desired.
2. Establish bearing radial load, F_R (F_R = P for Pure Radial Load Conditions). The DODGE program BEST can be used to find application loads.
3. Establish RPM.

Using the easy selection Table 5, pg. B11-26 find, under the RPM column, the equivalent radial load that equals or is higher than the application radial load for the desired life. The shaft size on the far left will be the minimum shaft size that you can use for your application. If the desired life is different than the values shown on the chart, use alternate Method A shown below.

Example:

1. L_{10} Life = 30,000 Hours
2. Radial load = 3800 lbs.
3. RPM = 1,000

At the intersection of the 1,000 RPM column and the 30,000 hours L_{10} life row, the equivalent radial load of 4362 lbs. Exceeds the 3800 lbs. Radial load for shaft sizes 2-1/8" to 2-1/4". A bearing with bore ranging from 2-1/8" to 2-1/4" may be used for this application.

SELECTION

Special Duty

ALTERNATE METHOD A - SELECTING A BEARING FOR AN L_{10} LIFE VALUE NOT SHOWN IN THE EASY SELECTION CHART.

The L_{10} life equation can be rearranged so that the bearing dynamic capacity C is identified in terms of L_{10}, RPM and P.

$$C_{90} = \left(\frac{L_{10} \times RPM}{1{,}500{,}000} \right)^{0.3} \times P$$

(P = F_R for Pure Radial Load Conditions)

Since the L_{10}, RPM, and P are known, solve for C_{90}. Select from the dynamic capacity column on Table 4, pg. B11-25 the C_{90} value equal to or greater than the C_{90} value just calculated. The bore size on the far left represents the bore size selection. Check that the application RPM does not exceed the MAX. RPM on Table 4. When selecting an L_{10} life of less than 30,000 hours, particular attention must be paid to shaft deflection and proper lubricant selection.

SELECTING BEARINGS SUPPORTING COMBINATION RADIAL AND THRUST LOADS

When a bearing supports both a radial load and a thrust load, the loading on the two rows is shared unequally depending on the ratio of thrust to radial load. The use of the X (radial factor) and Y (thrust factor) from Table 4 converts the applied thrust load and radial loads to an equivalent radial load having the same effect on the life of the bearing as a radial load of this magnitude.

The equivalent radial load $P = XF_R + YF_A$

Where:

- P = Equivalent radial load, lbs.
- FR = Radial load, lbs.
- FA = Thrust (axial) load, lbs.
- e = Thrust load to radial load factor (Table 4)
- X = Radial load factor (Table 4)
- Y = Thrust load factor (Table 4)

To find X and Y, calculate FA/FR and compare to e for the selected bore size. Determine X and Y from Table 4, pg. B11-25 depending on whether FA/FR is equal to or less than e, or FA/FR is greater than e. Substitute all known values into the equivalent radial load equation. P (equivalent radial load) can be used in the life formula to determine L_{10}, or it can be compared to the allowable equivalent radial load ratings for the speed and hours life desired in the easy selection Table 5, pg. B11-26 & B11-27.

SELECTING BEARINGS SUPPORTING ONLY THRUST LOADS

Tapered Roller Bearings perform extremely well under pure thrust load applications. Use $P = YF_A$ for the equivalent radial load. The value of Y is obtained from Table 4, pg. B11-25 for $FA/F_R > e$. Substitute Y and F_A into the equivalent load equation. P (equivalent radial load) can be used in the life formula to determine L_{10} or it can be compared to the allowable equivalent radial load ratings for the speed and hours life desired in the easy selection Table 5, pg. B11-26 & B11-27.

LUBRICATION

DODGE Special Duty Tapered Roller Bearings are lubricated at the factory with Mobilgrease XHP222. This grease will adequately handle low and medium speeds with low and medium loads at normal temperatures as defined on Table 8, pg. B11-29 For very low and high speeds, for heavy loads and for low and high temperatures, special greases must be used. Contact DODGE Application Engineering (864) 284-5700. DODGE engineers will recommend bearings and lubricants for the above unusual conditions. DODGE also has the expertise to custom design and build special bearings for your needs. The only maintenance requirement for DODGE Tapered Roller Bearings is periodic relubrication at regular intervals as outlined in the appropriate instruction manuals.

INSTALLATION AND MAINTENANCE

In nearly all applications good design practice requires two bearings supporting the shaft. In cases where three or more bearings are installed, unless precautions are taken to line the bearings up, both vertically and horizontally, it is possible to induce heavy loads. In the case of two bearings, alignment is not as critical, especially with DODGE Special Duty Tapered Roller Bearings. Special Duty bearings are designed to allow as

The DODGE Bearing Evaluation and Selection Technique (BEST) is a menu driven computer program that calculates bearing loads, fatigue life and operating temperature for a two bearing shaft system based on user supplied input parameters. This interactive program is available at **www.ptwizard.com** under the Product Selection area.



Special Duty

much as 2° to 5° of static misalignment up to 8" bore size. 1° to 1.5° for bore sizes greater than 8". To ensure good alignment, mounting surfaces must be checked for flatness and must lie in the same plane. When tightening base bolts and cap bolts, each bolt should be alternately tightened in incremental torque values until full torque is achieved to prevent the angular shifting of the pillow block that occurs when one bolt is tightened to its full torque. Shimming may be required to minimize misalignment.

Table 4: Special Duty Roller Bearings Radial/Thrust Factors

Bore Size	e	$F_A/F_R \leq e$		$F_A/F_R \geq e$		Dynamic Capacity $C_{90\ (TS)}$		Maximum RPM
		X	Y	X	Y	LBS.	NEWTONS	
1-3/8 to 1-11/2	0.31	1	0	0.40	1.97	7,717	34,337	3250
1-9/16 to 1-3/4	0.43	1	0	0.40	1.39	8,177	36,373	2900
1-7/8 to 2	0.46	1	0	0.40	1.31	8,266	36,769	2700
2-1/8 to 2-1/4	0.49	1	0	0.40	1.23	10,716	47,681	2300
2-3/8 to 2-1/2	0.51	1	0	0.40	1.18	11,010	48,990	2180
2-5/8 to 3	0.27	1	0	0.40	2.23	21,331	94,912	1830
3-3/16 to 3-1/2	0.43	1	0	0.40	1.39	23,553	104,800	1510
3-11/16 to 4	0.43	1	0	0.40	1.41	35,145	156,380	1330
4-7/16 to 4-1/2	0.49	1	0	0.40	1.23	35,145	156,380	1120
4-15/16 to 5	0.46	1	0	0.40	1.31	43,550	214,339	1040
5-7/16 to 6	0.48	0.87	1.80	0.70	2.18	62,000	275,873	860
6-1/2 to 7	0.54	0.87	1.61	0.70	1.95	68,700	305,685	760
7-15/16 to 8	0.34	0.87	2.55	0.70	3.08	79,200	352,406	700
8-1/2 to 10	0.45	0.87	1.90	0.70	2.30	76,500	340,392	550
11 to 12	0.34	0.87	2.53	0.70	3.06	124,000	551,746	490

COMPARING SPHERICAL TO TAPER ROLLER BEARING

The dynamic capacity C (spherical) and C_{90} (taper) are not to the same base.

To compare basic dynamic capacities, multiply C x .259 and compare to C_{90}.

FEATURES/BENEFITS PAGE B11-3	SPECIFICATION B11-20	SELECTION B11-23	SELECTION/DIMENSIONS PAGE B11-30

SELECTION



Table 5: Dodge Special Duty Tapered Roller Bearings

Bore Size	Hours Life	Allowable Equivalent Radial Load Rating (Lbs.) At Various Revolutions Per Minute												
		50	100	250	500	750	1000	1250	1500	1750	2000	2500	3000	3500
1-3/8 1-7/16 1-1/2	5,000	13210	10730	8151	6621	5862	5378	5029	4762	4546	4368	4085	3868	3693
	10,000	10730	8715	6621	5378	4762	4368	4085	3868	3693	3548	3318	3142	3000
	30,000	**7717**	**6268**	**4762**	**3868**	**3425**	**3142**	**2938**	**2782**	**2656**	**2552**	**2386**	**2259**	**2157**
	50,000	6621	5378	4085	3318	2938	2695	2521	2386	2279	2189	2047	1938	1851
	100,000	5378	4368	3318	2695	2386	2189	2047	1938	1851	1778	1663	1574	1503
1-9/16 1-5/8 1-11/16 1-3/4	5,000	13997	11369	8637	7015	6212	5698	5329	5045	4817	4628	4329	4098	
	10,000	11369	9235	7015	5698	5045	4628	4329	4098	3913	3759	3516	3329	
	30,000	**8177**	**6642**	**5045**	**4098**	**3629**	**3329**	**3113**	**2948**	**2814**	**2704**	**2529**	**2394**	
	50,000	7015	5698	4329	3516	3113	2856	2671	2529	2414	2320	2169	2054	
	100,000	5698	4628	3516	2856	2529	2320	2169	2054	1961	1884	1762	1668	
1-7/8 1-15/16 2	5,000	14149	11493	8731	7092	6279	5760	5387	5100	4870	4679	4376		
	10,000	11493	9335	7092	5760	5100	4679	4376	4143	3956	3800	3554		
	30,000	**8266**	**6714**	**5100**	**4143**	**3668**	**3365**	**3147**	**2980**	**2845**	**2733**	**2556**		
	50,000	7092	5760	4376	3554	3147	2887	2700	2556	2441	2345	2193		
	100,000	5760	4679	3554	2887	2556	2345	2193	2076	1982	1905	1781		
2-1/8 2-3/16 2-1/4	5,000	18343	14899	11318	9193	8140	7467	6984	6612	6313	6065			
	10,000	14899	12102	9193	7467	6612	6065	5673	5371	5128	4927			
	30,000	**10716**	**8704**	**6612**	**5371**	**4756**	**4362**	**4080**	**3863**	**3688**	**3543**			
	50,000	9193	7467	5673	4608	4080	3743	3500	3314	3164	3040			
	100,000	7467	6065	4608	3743	3314	3040	2843	2692	2570	2469			
2-3/8 2-7/16 2-1/2	5,000	18847	15308	11629	9446	8364	7672	7175	6794	6487	6232			
	10,000	15308	12434	9446	7672	6794	6232	5828	5518	5269	5062			
	30,000	**11010**	**8943**	**6794**	**5518**	**4886**	**4482**	**4192**	**3969**	**3789**	**3641**			
	50,000	9446	7672	5828	4734	4192	3845	3596	3405	3251	3123			
	100,000	7672	6232	4734	3845	3405	3123	2921	2766	2641	2537			
2-5/8 2-11/16 2-3/4 2-15/16 3	5,000	36514	29658	22530	18300	16204	14864	13902	13162	12567				
	10,000	29658	24090	18300	14864	13162	12074	11292	10691	10208				
	30,000	**21331**	**17326**	**13162**	**10691**	**9466**	**8684**	**8121**	**7689**	**7342**				
	50,000	18300	14864	11292	9172	8121	7450	6967	6597	6298				
	100,000	14864	12074	9172	7450	6597	6051	5659	5358	5116				
3-3/16 3-3/8 3-7/16 3-1/2	5,000	40317	32748	24877	20207	17892	16413	15350	14533					
	10,000	32748	26600	20207	16413	14533	13331	12468	11804					
	30,000	**23553**	**19131**	**14533**	**11804**	**10452**	**9588**	**8967**	**8490**					
	50,000	20207	16413	12468	10127	8967	8226	7693	7284					
	100,000	16413	13331	10127	8226	7284	6681	6249	5916					
3-11/16 3-3/4 3-7/8 3-15/16 4	5,000	60160	48865	37121	30152	26698	24491	22905						
	10,000	48865	39691	30152	24491	21686	19893	18604						
	30,000	**35145**	**28547**	**21686**	**17614**	**15597**	**14307**	**13381**						
	50,000	30152	24491	18604	15112	13381	12274	11480						
	100,000	24491	19893	15112	12274	10869	9970	9324						
4-7/16 4-1/2	5,000	60160	48865	37121	30152	26698	24491							
	10,000	48865	39691	30152	24491	21686	19893							
	30,000	**35145**	**28547**	**21686**	**17614**	**15597**	**14307**							
	50,000	30152	24491	18604	15112	13381	12274							
	100,000	24491	19893	15112	12274	10869	9970							
4-15/16 5	5,000	74548	60551	45998	37362	33083	30348							
	10,000	60551	49183	37362	30348	26872	24650							
	30,000	**43550**	**35374**	**26872**	**21827**	**19327**	**17729**							
	50,000	37362	30348	23054	18726	16581	15210							
	100,000	30348	24650	18726	15210	13468	12354							



Table 5: Dodge Special Duty Tapered Roller Bearings

Bore Size	Hours Life	Allowable Equivalent Radial Load Rating (Lbs.) At Various Revolutions Per Minute												
		50	100	250	500	750	1000	1250	1500	1750	2000	2500	3000	3500
5-7/16 5-15/16 6	5,000	106130	86205	65485	53190	47100								
	10,000	86205	70020	53190	43205	38255								
	30,000	**62000**	**50360**	**38255**	**31075**	**27515**								
	50,000	53190	43205	32820	26660	23605								
	100,000	43205	35090	26660	21655	19175								
6-1/2 6-15/16 7	5,000	117600	95520	72560	58940	52190								
	10,000	95520	77585	58940	47575	42390								
	30,000	**68700**	**55800**	**42390**	**34430**	**30490**								
	50,000	58940	47875	36365	29540	26155								
	100,000	47875	38885	29540	23995	21245								
7-15/16 8	5,000	135570	110120	83650	67945	60165								
	10,000	110120	89445	67945	55190	48870								
	30,000	**79200**	**64330**	**48870**	**39695**	**35145**								
	50,000	67945	55190	41925	34055	30155								
	100,000	55190	44830	34055	27660	24490								
8-1/2 9 9-1/2 10	5,000	130950	106365	80800	65630									
	10,000	106365	86395	65630	53310									
	30,000	**76500**	**62135**	**47250**	**38340**									
	50,000	65630	53310	40495	32895									
	100,000	53310	43300	32895	26715									
11 12	5,000	212260	172410	130970	106380									
	10,000	172410	140040	106380	86410									
	30,000	**124000**	**100720**	**76510**	**62145**									
	50,000	106380	86410	65640	53315									
	100,000	86410	70185	53315	43305									

SELECTION



Special Duty

Table 6: Special Duty Pillow Blocks Housing Permissible Thrust Load, Lbs. *

Shaft Size, Inches	2-Bolt	4-Bolt	Shaft Size, Inches	2-Bolt	4-Bolt
1-3/8 1-7/16 1-1/2	1521	---	3-11/16 3-3/4 3-7/8	---	8250
1-9/16 1-5/8 1-11/16 1-3/4	1772	---	3-15/16 4 4-7/16 4-1/2	---	10538
1-7/8 1-15/16 2	1964	---	4-15/16 5 5-7/16	--- ---	12190 17957
2-1/8 2-3/16 2-1/4	2325	---	5-15/16 6 6-1/2	---	24115
2-3/8 2-7/16 2-1/2	3122	3122	6-15/16 7 7-15/16	---	27260
2-5/8 2-11/16 2-3/4 2-13/16 2-7/8 2-15/16 3	4375	4375	8 8-1/2 9 9-1/2 10 11 12	--- ---	38138 50655
3-3/16 3-1/4 3-3/8 3-7/16 3-1/2	6118	6118			

* The limits above apply to pillow blocks. For thrust loads larger than listed or heavy thrust loading on other style housing, contact DODGE Engineering for recommendation.

Table 7: Special Duty Maximum Total Axial Expansion

Shaft Size - Inches	Special Duty		
	2-Blt. P.B.	4-Blt. P.B.	Flg.
1-3/8 - 1-1/2	3/16	-	3/16
1-9/16 - 1-3/4	5/8	-	1/4
1-7/8 - 2	5/8	-	1/4
2-1/8 - 2-1/4	5/8	-	1/4
2-3/8 - 2-1/2	5/8	5/8	1/4
2-5/8 - 3	3/4	5/8	5/8
3-3/16 - 3-1/2	3/4	3/4	3/4
3-11/16 - 4	-	3/4	1/4
4-7/16 - 4-1/2	-	3/4	5/8
4-15/16 - 5	-	3/4	5/8
5-7/16 - 6	-	3/4	5/8
6-1/2 - 7	-	1-1/2	-
7-15/16 - 8	-	1-1/2	-
8-1/2 - 10	-	1-1/2	-
11 - 12	-	1-1/2	-



Special Duty

Table 8: Definition of Operating Conditions For Tapered Roller Bearings

LOW SPEED	UP TO 20% OF MAX. RPM (TABLE 4)
MEDIUM SPEED	OVER 20% TO 80% OF MAX. RPM
HIGH SPEED	OVER 80% OF MAX. RPM
LIGHT LOAD	UP TO 30% OF C_{90} (TABLE 4)
NORMAL LOAD	OVER 30% TO 70% OF C_{90}
HEAVY LOAD	OVER 70% OF C_{90}
LOW TEMPERATURE	-100°F TO 20°F
MEDIUM TEMPERATURE	OVER 20°F TO 200°F
HIGH TEMPERATURE	OVER 200°F TO 300°F
VERY HIGH TEMPERATURE	OVER 300°F TO 400°F

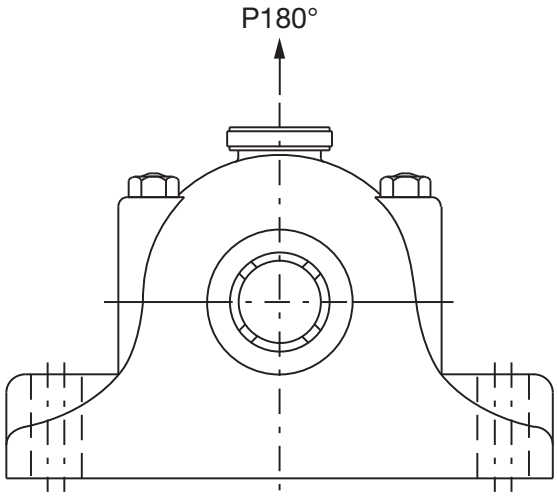

Table 9: Pillow Block Housing Ratings, Special Duty

Shaft Size (Inches)	Housing Strength Lbs. Gray Iron 180°
1-3/8 - 1-1/2	3,470
1-9/16 - 1-3/4	4,430
1-7/8 - 2	5,250
2-1/8 - 2-1/4	7,300
2-3/8 - 2-1/2	7,200
2-5/8 - 3	10,600
3-3/16 - 3-1/2	13,000
3-11/6 - 4	21,600
4-7/16 - 4-1/2	25,800
4-15/16 - 5	22,900
5-7/16 - 6	41,500
6-1/2 - 7	82,000
7-15/16 - 8	104,000

SELECTION/DIMENSIONS



Special Duty Pillow Block - Inch
2-BOLT BASE

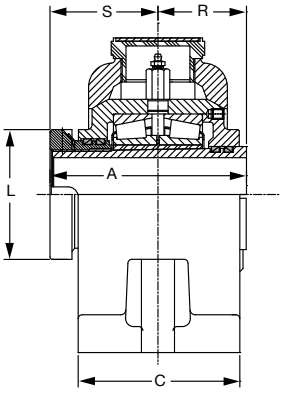

NON-EXPANSION CONSTRUCTION

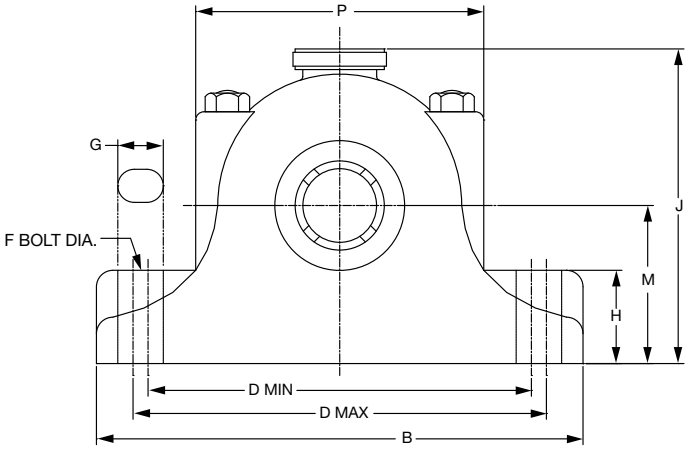

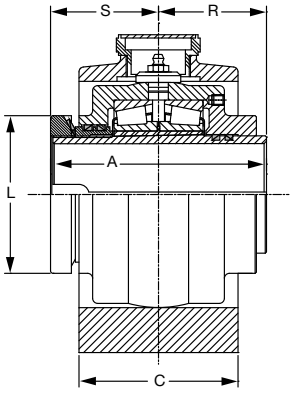

EXPANSION CONSTRUCTION

Gray Iron Non-Expansion*				Gray Iron Expansion ✣			
Shaft Size Inches #	**Part Number**	**Part Name**	**Weight Lbs (Approx)**	**Shaft Size Inches #**	**Part Number**	**Part Name**	**Weight Lbs (Approx)**
1-3/8	**066213**	P2B-SD-106	20	1-3/8	**066249**	P2B-SD-106E	22
1-7/16	**066214**	P2B-SD-107	20	1-7/16	**066250**	P2B-SD-107E	22
1-1/2	**066300**	P2B-SD-108	20	1-1/2	**066306**	P2B-SD-108E	22
1-9/16	**066212**	P2B-SD-109	27	1-9/16	**066248**	P2B-SD-109E	28
1-5/8	**066228**	P2B-SD-110	27	1-5/8	**066243**	P2B-SD-110E	28
1-11/16	**066216**	P2B-SD-111	27	1-11/16	**066252**	P2B-SD-111E	28
1-3/4	**066301**	P2B-SD-112	27	1-3/4	**066307**	P2B-SD-112E	28
1-7/8	**066217**	P2B-SD-114	33	1-7/8	**066253**	P2B-SD-114E	33
1-15/16	**066218**	P2B-SD-115	32	1-15/16	**066254**	P2B-SD-115E	32
2	**066302**	P2B-SD-200	32	2	**066308**	P2B-SD-200E	32
2-1/8	**066215**	P2B-SD-202	48	2-1/8	**066257**	P2B-SD-202EE	50
2-3/16	**066220**	P2B-SD-203	47	2-3/16	**066256**	P2B-SD-203E	49
2-1/4	**066303**	P2B-SD-204	47	2-1/4	**066309**	P2B-SD-204	49
2-7/16	**066222**	P2B-SD-207	56	2-7/16	**066258**	P2B-SD-207E	60
2-1/2	**066246**	P2B-SD-208	56	2-1/2	**066247**	P2B-SD-208E	60
2-5/8	**066223**	P2B-SD-210	84	2-5/8	**066262**	P2B-SD-210E	80
2-11/16	**066304**	P2B-SD-211	84	2-11/16	**066310**	P2B-SD-211E	80
2-3/4	**066226**	P2B-SD-212	84	2-3/4	**066263**	P2B-SD-212E	80
2-15/16	**066230**	P2B-SD-215	82	2-15/16	**066266**	P2B-SD-215E	78
3	**066305**	P2B-SD-300	82	3	**066311**	P2B-SD-300E	78
3-3/16	**066232**	P2B-SD-303	120	3-3/16	**066269**	P2B-SD-303E	120
3-3/8	**066237**	P2B-SD-306	119	3-3/8	**066271**	P2B-SD-306E	119
3-7/16	**066234**	P2B-SD-307	118	3-7/16	**066270**	P2B-SD-307E	118
3-1/2	**066236**	P2B-SD-308	118	3-1/2	**066273**	P2B-SD-308E	118

* Furnished Unless Otherwise Specified
\# Consult DODGE For Sizes Not Listed

\# Consult DODGE For Sizes Not Listed
✣ 4-Bolt Caps

FEATURES/BENEFITS PAGE B11-3	SPECIFICATION B11-20	HOW TO ORDER B11-21	SELECTION PAGE B11-23



Special Duty Pillow Block - Inch
2-BOLT BASE

Shaft Size Inches	A	B	C	D		F Bolt Dia.	G	H	J	L	M	P	R	S	Exp*
				Min.	Max.										
1-3/8 1-7/16 1-1/2	4.00	9.00	3.00	6.88	7.63	1/2	1.00	2.13	6.25	2.44	2.88	5.88	1.81	2.19	3/16
1-9/16 1-5/8 1-11/16 1-3/4	4.13	9.50	3.44	7.56	7.94	1/2	1.00	2.38	6.81	2.81	3.13	5.94	1.88	2.25	5/8
1-7/8 1-15/16 2	4.25	11.00	3.50	8.25	9.25	5/8	1.25	2.50	7.13	3.06	3.25	7.25	1.94	2.31	5/8
2-1/8 2-3/16 2-1/4	4.56	12.00	4.00	9.13	10.38	5/8	1.25	2.88	8.00	3.44	3.75	7.25	2.06	2.50	5/8
2-7/16 2-1/2	5.06	13.25	4.25	10.00	11.50	3/4	1.50	3.00	8.56	3.81	4.00	7.81	2.31	2.75	5/8
2-5/8 2-11/16 2-3/4 2-15/16 3	5.75	14.25	4.75	11.00	12.50	3/4	1.50	3.75	9.88	4.44	4.75	8.69	2.63	3.13	3/4
3-3/16 3-3/8 3-7/16 3-1/2	6.38	16.75	5.50	13.25	14.25	7/8	1.50	4.00	11.38	5.06	5.50	11.25	2.94	3.44	3/4

* Total Expansion For Expansion Bearing Only

FEATURES/BENEFITS PAGE B11-3	SPECIFICATION B11-20	HOW TO ORDER B11-21	SELECTION PAGE B11-23

SELECTION/DIMENSIONS

Special Duty Pillow Block - Inch
4-BOLT BASE

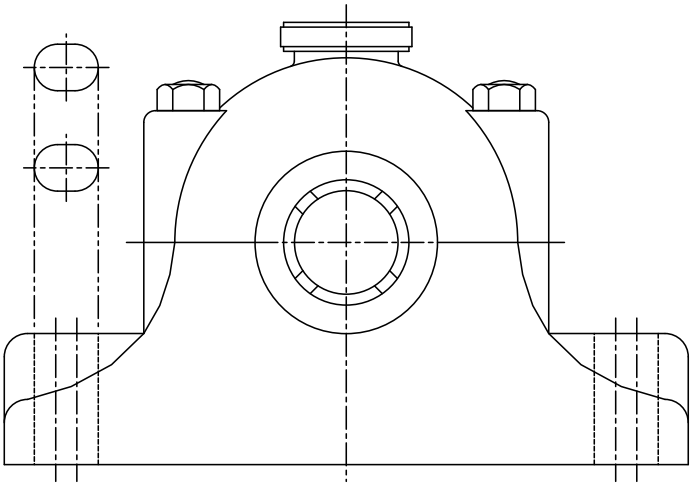

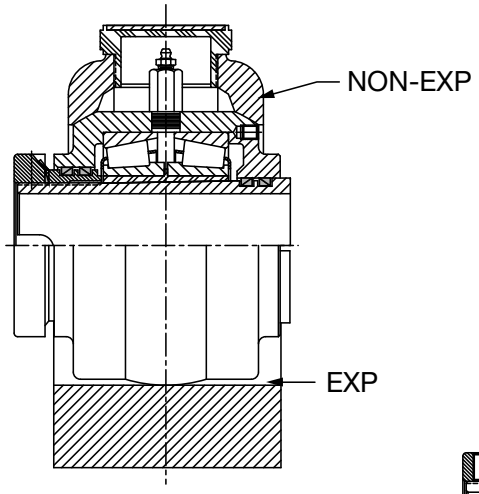

2-3/8" THRU 3-1/2"
CONSTRUCTION

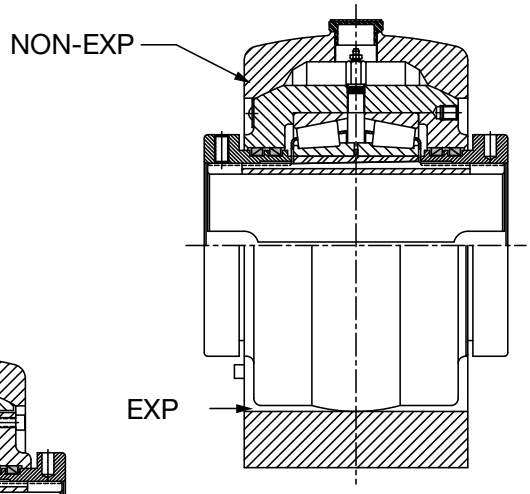

3-11/16" THRU 6"
CONSTRUCTION

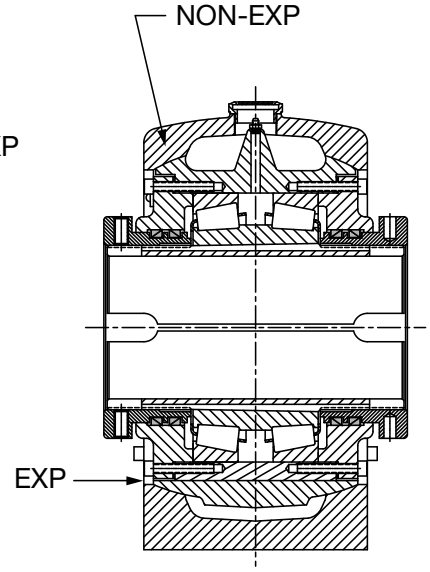

6-1/16" THRU 8" CONSTRUCTION

FEATURES/BENEFITS PAGE B11-3	SPECIFICATION B11-20	HOW TO ORDER B11-21	SELECTION PAGE B11-23



Special Duty Pillow Block - Inch
4-BOLT BASE

Gray Iron Non-Expansion *				Gray Iron Expansion			
Shaft Size Inches #	Part Number	Part Name	Weight Lbs (Approx)	Shaft Size Inches #	Part Number	Part Name	Weight Lbs (Approx)
2-3/8	**066360**	P4B-SD-206	60	2-3/8	**066400**	P4B-SD-206E	60
2-7/16	**066224**	P4B-SD-207	60	2-7/16	**066260**	P4B-SD-207E	60
2-1/2	**066244**	P4B-SD-208	60	2-1/2	**066245**	P4B-SD-208E	60
2-11/16	**066225**	P4B-SD-211	82	2-11/16	**066261**	P4B-SD-211E	82
2-3/4	**066363**	P4B-SD-212	82	2-3/4	**066403**	P4B-SD-212E	82
2-7/8	**066365**	P4B-SD-214	81	2-7/8	**066405**	P4B-SD-214E	81
2-15/16	**066231**	P4B-SD-215	80	2-15/16	**066268**	P4B-SD-215E	80
3	**066366**	P4B-SD-300	80	3	**066406**	P4B-SD-300E	80
3-3/16	**066367**	P4B-SD-303	124	3-3/16	**066407**	P4B-SD-303E	124
3-3/8	**066370**	P4B-SD-306	122	3-3/8	**066410**	P4B-SD-306E	122
3-7/16	**066235**	P4B-SD-307	120	3-7/16	**066272**	P4B-SD-307E	120
3-1/2	**066371**	P4B-SD-308	120	3-1/2	**066411**	P4B-SD-308E	120
3-11/16	**066372**	P4B-SD-311	215	3-11/16	**066412**	P4B-SD-311E	230
3-3/4	**066373**	P4B-SD-312	215	3-3/4	**066413**	P4B-SD-312E	230
3-7/8	**066374**	P4B-SD-314	215	3-7/8	**066414**	P4B-SD-314E	230
3-15/16	**066238**	P4B-SD-315	215	3-15/16	**066274**	P4B-SD-315E	230
4	**066375**	P4B-SD-400	215	4	**066415**	P4B-SD-400E	230
4-7/16	**066240**	P4B-SD-407	296	4-7/16	**066276**	P4B-SD-407E	296
4-1/2	**066377**	P4B-SD-408	296	4-1/2	**066417**	P4B-SD-408E	296
4-15/16	**066242**	P4B-SD-415	380	4-15/16	**066278**	P4B-SD-415E	380
5	**066378**	P4B-SD-500	380	5	**066418**	P4B-SD-500E	380
5-7/16	**066379**	P4B-SD-507	585	5-7/16	**066419**	P4B-SD-507E	585
5-15/16	**066381**	P4B-SD-515	585	5-15/16	**066421**	P4B-SD-51SE	585
6	**066382**	P4B-SD-600	585	6	**066422**	P4B-SD-600E	585
6-1/2	**066384**	P4B-SD-608	1050	6-1/2	**066424**	P4B-SD-608E	1050
6-15/16	**066385**	P4B-SD-615	1050	6-15/16	**066425**	P4B-SD-615E	1050
7	**066386**	P4B-SD-700	1050	7	**066426**	P4B-SD-700E	1050
7-15/16	**066388**	P4B-SD-715	1550	7-15/16	**066428**	P4B-SD-715E	1550
8	**066389**	P4B-SD-800	1550	8	**066429**	P4B-SD-800E	1550

* Furnished Unless Otherwise Specified

\# Consult DODGE For Sizes Not Listed

Consult DODGE For Sizes Not Listed

Note: When ordering sizes larger than 5", specify RPM

Note: All sizes use a 1/8 - 27 NPT hydraulic grease fitting

SELECTION/DIMENSIONS

Special Duty Pillow Block - Inch
4-BOLT BASE

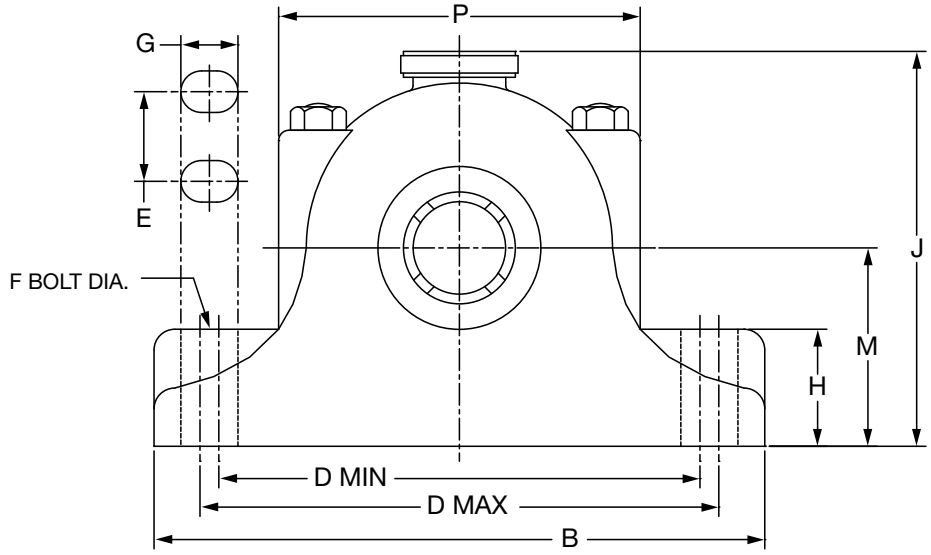

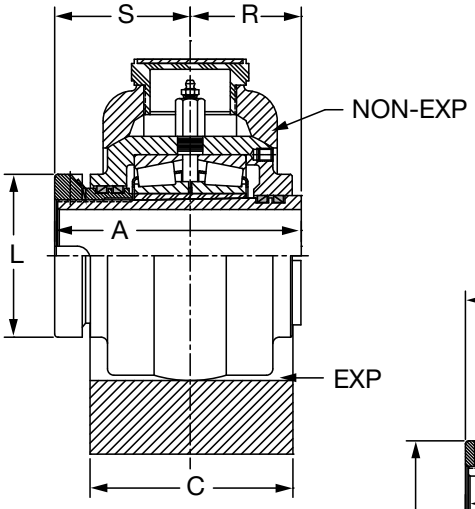

2-3/8" THRU 3-1/2"
CONSTRUCTION

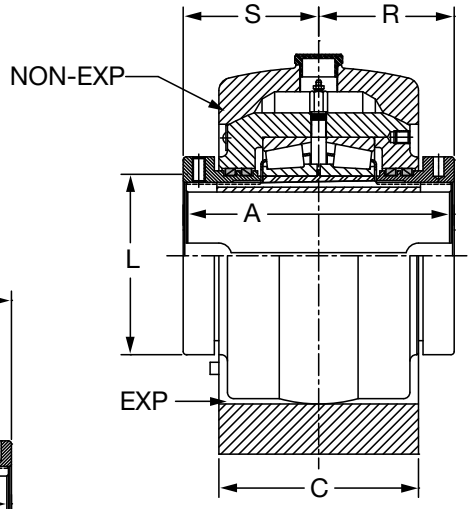

3-11/16" THRU 6"
CONSTRUCTION

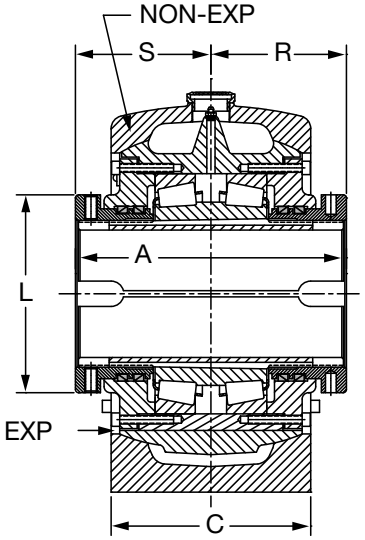

6-1/16" THRU 8" CONSTRUCTION



Special Duty Pillow Block - Inch
4-BOLT BASE

Shaft Size Inches	A	B*	C*	D		E	F Bolt Dia.	G*	H*	J	L	M	P*	R	S	Exp**
				Min.	Max.											
2-3/8 2-7/16 2-1/2	5.06	13.25	4.25	9.88	11.63	2.50	5/8	1.50	3.00	8.56	3.81	4.00	7.81	2.31	2.75	5/8
2-11/16 2-3/4 2-7/8 2-15/16 3	5.75	14.25	4.75	10.88	12.63	2.75	5/8	1.50	3.75	9.88	4.44	4.75	8.69	2.63	3.13	5/8
3-3/16 3-3/8 3-7/16 3-1/2	6.38	16.75	5.50	13.00	14.50	3.25	3/4	1.50	4.00	11.38	5.06	5.50	10.25	2.94	3.44	3/4
3-11/16 3-3/4 3-7/8 3-15/16 4	8.50	19.00	7.00	15.00	16.00	3.25	7/8	1.50	4.00	13.38	6.25	6.38	13.75	4.25	4.25	3/4
4-7/16 4-1/2	9.50	20.00	7.50	15.50	17.50	3.50	7/8	1.88	4.00	14.50	7.25	7.25	12.63	4.75	4.75	3/4
4-15/16 5	10.50	23.00	8.25	17.75	19.75	3.75	1	2.13	4.25	15.68	8.00	7.50	16.50	5.25	5.25	3/4
5-7/16 5-15/16 6	12.00	26.75	9.25	21.38	23.63	5.00	1-1/8	2.25	5.00	19.00	9.50	9.00	17.38	6.00	6.00	3/4
6-1/2 6-15/16 7	13.50	34.38	10.25	27.50	30.50	5.50	1-1/2	3.00	6.00	23.00	11.00	11.25	22.75	6.75	6.75	1-1/2
7-15/16 8	14.50	38.75	11.25	30.50	34.00	6.00	1-3/4	3.50	7.00	26.00	12.50	12.50	25.13	7.25	7.25	1-1/2

* These Are As Cast Surfaces. Dimensions May Fluctuate Due To Draft Angles And Pattern Shifts

** Exp-Total Expansion Divided Equally On Both Sides Of Bearing (Expansion Bearing Only)

Note: All sizes use a 1/8 - 27 NPT hydraulic grease fitting

FEATURES/BENEFITS PAGE B11-3	SPECIFICATION B11-20	HOW TO ORDER B11-21	SELECTION PAGE B11-23

SELECTION/DIMENSIONS

Special Duty Flange Bearing - Inch

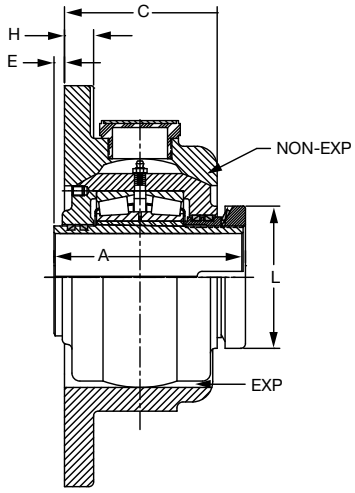

1-3/8" THRU 3-1/2" CONSTRUCTION

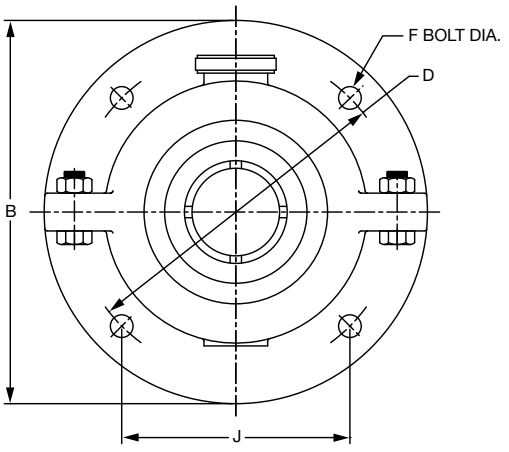

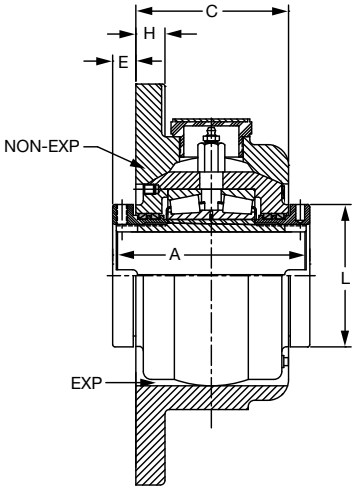

3-11/16" THRU 6" CONSTRUCTION

Gray Iron Non-Expansion*				Gray Iron Expansion			
Shaft Size Inches #	**Part Number**	**Part Name**	**Weight Lbs (Approx)**	**Shaft Size Inches #**	**Part Number**	**Part Name**	**Weight Lbs (Approx)**
1-3/8	**104160**	F4B-SD-106	21	1-3/8	**104195**	F4B-SD-106E	22
1-7/16	**104020**	F4B-SD-107	21	1-7/16	**104030**	F4B-SD-107E	22
1-1/2	**104161**	F4B-SD-108	21	1-1/2	**104196**	F4B-SD-108E	22
1-11/16	**104021**	F4B-SD-111	30	1-11/16	**104031**	F4B-SD-115E	30
1-3/4	**104162**	F4B-SD-112	30	1-3/4	**104197**	F4B-SD-112E	30
1-15/16	**104022**	F4B-SD-115	37	1-15/16	**104032**	F4B-SD-115E	37
2	**104164**	F4B-SD-200	37	2	**104199**	F4B-SD-200E	37
2-3/16	**104023**	F4B-SD-203	46	2-3/16	**104033**	F4B-SD-203E	49
2-3/8	**104169**	F4B-SD-206	62	2-3/8	**104204**	F4B-SD-206E	64
2-7/16	**104024**	F4B-SD-207	62	2-7/16	**104034**	F4B-SD-207E	64
2-1/2	**104170**	F4B-SD-208	62	2-1/2	**104205**	F4B-SD-208E	64
2-11/16	**104172**	F4B-SD-211	85	2-11/16	**104207**	F4B-SD-211E	88
2-3/4	**104173**	F4B-SD-212	83	2-3/4	**104208**	F4B-SD-212E	86
2-15/16	**104025**	F4B-SD-215	81	2-15/16	**104035**	F4B-SD-215E	85
3	**104176**	F4B-SD-300	81	3	**104211**	F4B-SD-300E	84
3-3/16	**104177**	F4B-SD-303	141	3-3/16	**104212**	F4B-SD-303E	145
3-7/16	**104026**	F4B-SD-307	139	3-7/16	**104036**	F4B-SD-307E	144
3-1/2	**104181**	F4B-SD-308	138	3-1/2	**104216**	F4B-SD-308E	143
3-15/16	**104027**	F4B-SD-315	230	3-15/16	**104037**	F4B-SD-315E	234
4	**104010**	F4B-SD-400	229	4	**104003**	F4B-SD-400E	234
4-7/16	**104028**	F4B-SD-407	325	4-7/16	**104038**	F4B-SD-407E	325
4-15/16	**104029**	F4B-SD-415	430	4-15/16	**104039**	F4B-SD-415E	430
5	**104013**	F4B-SD-500	428	5	**104006**	F4B-SD-500E	428
5-15/16	**104016**	F4B-SD-515	560	5-15/16	**104017**	F4B-SD-515E	560
6	**104018**	F4B-SD-600	560	6	**104019**	F4B-SD-600E	560

* Furnished Unless Otherwise Specified

Consult DODGE For Sizes Not Listed

Note: when ordering sizes larger than 5", specify RPM

FEATURES/BENEFITS PAGE B11-3	SPECIFICATION B11-20	HOW TO ORDER B11-21	SELECTION PAGE B11-23



Special Duty Flange Bearing - Inch

Shaft Size Inches	A	B	C	D	E	F Bolt Dia.	H	J	L	Exp*
1-3/8 1-7/16 1-1/2	4.00	8.25	3.00	7.00	0.31	1/2	0.63	4.95	2.44	3/16
1-11/16 1-3/4	4.13	9.00	3.38	7.63	0.19	1/2	0.69	5.39	2.81	1/4
1-15/16 2	4.25	10.00	3.50	8.38	0.19	5/8	0.75	5.92	3.06	1/4
2-3/16	4.50	10.75	4.00	9.13	0.06	5/8	0.81	6.45	3.44	1/4
2-3/8 2-7/16 2-1/2	5.06	12.00	4.25	10.25	0.19	3/4	0.88	7.25	3.81	1/4
2-11/16 2-3/4 2-15/16 3	5.75	13.00	4.63	11.25	0.31	3/4	1.00	7.96	4.44	5/8
3-3/16 3-7/16 3-1/2	6.38	14.50	5.38	12.50	0.25	7/8	1.13	8.84	5.06	1/4
3-15/16 4	8.50	18.00	6.75	15.75	0.88	1	1.25	11.14	6.25	1/4
4-7/16	9.50	19.50	7.25	17.00	1.13	1-1/8	1.38	12.02	7.25	5/8
4-15/16 5	10.50	21.50	8.25	19.00	1.00	1-1/8	1.75	13.44	8.00	5/8
5-15/16 6	12.00	25.50	9.00	22.50	1.50	1-1/4	1.75	15.91	9.50	5/8

* Exp-Total Expansion For Expansion Bearing Only

FEATURES/BENEFITS PAGE B11-3	SPECIFICATION B11-20	HOW TO ORDER B11-21	SELECTION PAGE B11-23

SELECTION/DIMENSIONS

Special Duty Units - Inch

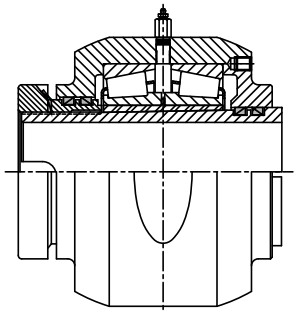

2

D UNIT
1-3/8" THRU 3-1/2" CONSTRUCTION

NON-EXPANSION
3-11/16" THRU 12" NOT SHOWN
CONSUIT DODGE FOR DETAIL

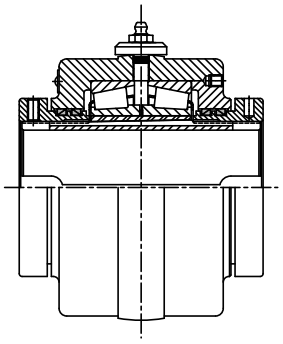

S-1 UNIT
3-11/16" THRU 6" CONSTRUCTION

EXPANSION
1-3/8" THRU 3-1/2" AND 6" THRU 12" NOT SHOWN
CONSUIT DODGE FOR DETAIL

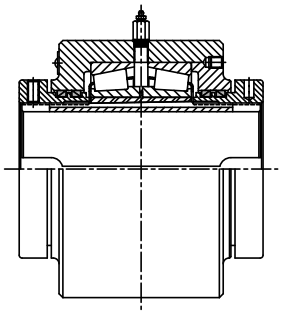

B-1 UNIT
3-11/16" THRU 6" CONSTRUCTION

CUSTOMER SUPPLIED HOUSING ONLY
1-3/8" THRU 3-1/2" AND 6-1/2" THRU 12" NOT SHOWN
CONSUIT DODGE FOR DETAIL

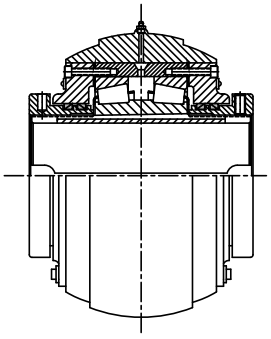

S-1 UNIT
6-1/16" THRU 8" CONSTRUCTION

EXPANSION
1-3/8" THRU 6" AND 8-1/2" THRU 12" NOT SHOWN
CONSUIT DODGE FOR DETAIL



Special Duty Units - Inch

Shaft Size Inches #	D Units - Non-Expansion		S-1 Units - Expansion		B-1 Units - Customer Supplied Housing		Weight Lbs (Approx)
	Part Number	Part Name	Part Number	Part Name	Part Number	Part Name	
1-3/8	**066445**	DU-SD-106	**066500**	S1U-SD-106	**066560**	B1U-SD-106	7
1-7/16	**066280**	DU-SD-107	**066290**	S1U-SD-107	**066315**	B1U-SD-107	7
1-1/2	**066446**	DU-SD-108	**066501**	S1U-SD-108	**066561**	B1U-SD-108	7
1-9/16	**066444**	DU-SD-109	**066499**	S1U-SD-109	**066559**	B1U-SD-109	10
1-5/8	**066324**	DU-SD-110	**066312**	S1U-SD-110	**066314**	B1U-SD-110	10
1-11/16	**066281**	DU-SD-111	**066291**	S1U-SD-111	**066316**	B1U-SD-111	10
1-3/4	**066447**	DU-SD-112	**066502**	S1U-SD-112	**066562**	B1U-SD-112	10
1-7/8	**066448**	DU-SD-114	**066503**	S1U-SD-114	**066563**	B1U-SD-114	12
1-15/16	**066282**	DU-SD-115	**066292**	S1U-SD-115	**066317**	B1U-SD-115	12
2	**066464**	DU-SD-200	**066504**	S1U-SD-200	**066564**	B1U-SD-200	12
2-1/8	**066450**	DU-SD-202	**066506**	S1U-SD-202	**066566**	B1U-SD-202	16
2-3/16	**066283**	DU-SD-203	**066293**	S1U-SD-203	**066318**	B1U-SD-203	16
2-1/4	**066451**	DU-SD-204	**066507**	S1U-SD-204	**066567**	B1U-SD-204	16
2-3/8	**- - - -**	--------	**066509**	S1U-SD-206	**066569**	B1U-SD-206	20
2-7/16	**066284**	DU-SD-207	**066294**	S1U-SD-207	**066319**	B1U-SD-207	20
2-1/2	**066285**	DU-SD-208	**066510**	S1U-SD-208	**066570**	B1U-SD-208	20
2-5/8	**066455**	DU-SD-210	**066511**	S1U-SD-210	**066571**	B1U-SD-210	29
2-11/16	**066279**	DU-SD-211	**066326**	S1U-SD-211	**066572**	B1U-SD-211	29
2-3/4	**066456**	DU-SD-212	**066512**	S1U-SD-212	**066573**	B1U-SD-212	29
2-13/16	**066457**	DU-SD-213	**066513**	S1U-SD-213	**066574**	B1U-SD-213	29
2-7/8	**066458**	DU-SD-214	**066514**	S1U-SD-214	**066575**	B1U-SD-214	29
2-15/16	**066286**	DU-SD-215	**066295**	S1U-SD-215	**066320**	B1U-SD-215	29
3	**066459**	DU-SD-300	**066515**	S1U-SD-300	**066576**	B1U-SD-300	29
3-3/16	**066460**	DU-SD-303	**066516**	S1U-SD-303	**066577**	B1U-SD-303	47
3-1/4	**066461**	DU-SD-304	**066517**	S1U-SD-304	**066578**	B1U-SD-304	47
3-3/8	**066463**	DU-SD-306	**066519**	S1U-SD-306	**066580**	B1U-SD-306	47
3-7/16	**066287**	DU-SD-307	**066296**	S1U-SD-307	**066321**	B1U-SD-307	47
3-1/2	**066465**	DU-SD-308	**066520**	S1U-SD-308	**066581**	B1U-SD-308	47
3-11/16	**066466**	DU-SD-311	**066521**	S1U-SD-311	**066582**	B1U-SD-311	94
3-3/4	**066467**	DU-SD-312	**066522**	S1U-SD-312	**066583**	B1U-SD-312	94
3-7/8	**066468**	DU-SD-314	**066523**	S1U-SD-314	**066584**	B1U-SD-314	94
3-15/16	**066288**	DU-SD-315	**066297**	S1U-SD-315	**066322**	B1U-SD-315	94
4	**066469**	DU-SD-400	**066524**	S1U-SD-400	**066585**	B1U-SD-400	94
4-7/16	**066289**	DU-SD-407	**066298**	S1U-SD-407	**066587**	B1U-SD-407	116
4-1/2	**066471**	DU-SD-408	**066526**	S1U-SD-408	**066588**	B1U-SD-408	116
4-15/16	**066325**	DU-SD-415	**066299**	S1U-SD-415	**066589**	B1U-SD-415	175
5	**066472**	DU-SD-500	**066527**	S1U-SD-500	**066590**	B1U-SD-500	175
5-7/16	**066473**	DU-SD-507	**066528**	S1U-SD-507	**066591**	B1U-SD-507	300
5-15/16	**066475**	DU-SD-515	**066530**	S1U-SD-515	**066593**	B1U-SD-515	300
6	**066476**	DU-SD-600	**066531**	S1U-SD-600	**066594**	B1U-SD-600	300
6-1/2	**066478**	DU-SD-608	**066533**	S1U-SD-608	**066596**	B1U-SD-608	560
6-15/16	**066479**	DU-SD-615	**066534**	S1U-SD-615	**066598**	B1U-SD-615	560
7	**066480**	DU-SD-700	**066535**	S1U-SD-700	**066607**	B1U-SD-700	560
7-15/16	**066482**	DU-SD-715	**066537**	S1U-SD-715	**066600**	B1U-SD-715	800
8	**066483**	DU-SD-800	**066538**	S1U-SD-800	**066601**	B1U-SD-800	800
8-1/2	**066484**	DU-SD-808	**066539**	S1U-SD-808	**066602**	B1U-SD-808	1380
9	**066485**	DU-SD-900	**066540**	S1U-SD-900	**066603**	B1U-SD-900	1380
9-1/2	**066486**	DU-SD-908	**066541**	S1U-SD-908	**- - - -**	--------	1380
10	**066487**	DU-SD-1000	**066542**	S1U-SD-1000	**066604**	B1U SD 1000	1380
11	**066488**	DU-SD-1100	**066543**	S1U-SD-1100	**066605**	B1U-SD-1100	1890
12	**066489**	DU-SD-1200	**066544**	S1U-SD-1200	**066606**	B1U-SD-1200	1890

Consult DODGE For Sizes Not Listed

Note: When ordering sizes larger than 5", specify RPM

FEATURES/BENEFITS PAGE B11-3	SPECIFICATION B11-20	HOW TO ORDER B11-21	SELECTION PAGE B11-23

SELECTION/DIMENSIONS

Special Duty Units - Inch

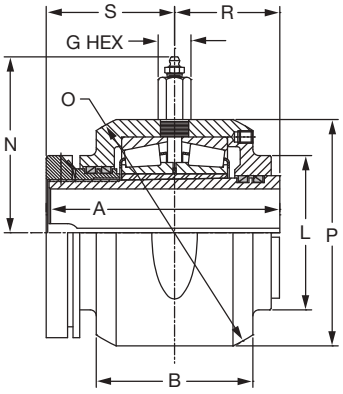

1-3/8" - 3-1/2"

D-UNIT

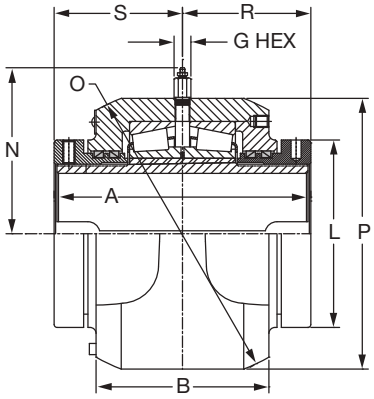

3-11/16" - 6"

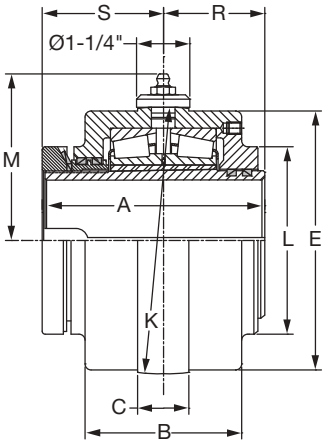

1-3/8" - 3-1/2"

S1-UNIT

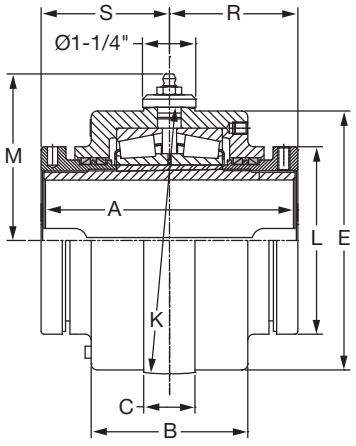

3-11/16" - 6"

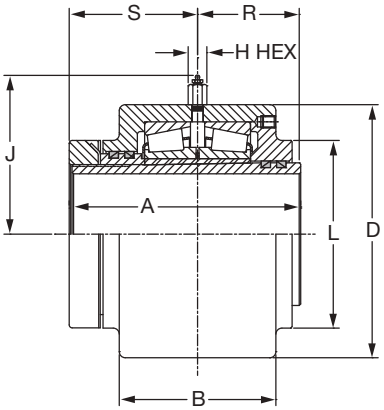

1-3/8" - 3-1/2"

B1-UNIT

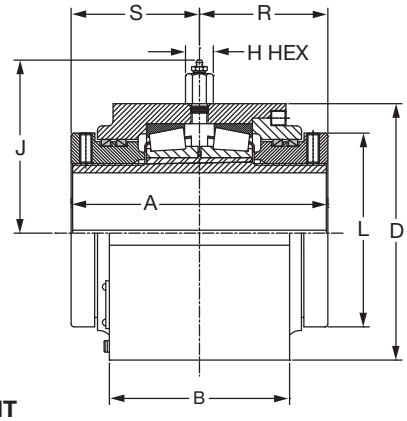

3-11/16" - 6"

DODGE



Special Duty Units - Inch

Shaft Size Inches	A	B	C	D	E	F	G Hex	H Hex	J	K	L	M	N	O	P	R	S
1-3/8 1-7/16 1-1/2	4.00	2.69	0.75	3.875 ★	3.75	----	7/16	5/8	3.06	4.062 ★	2.44	2.69	2.50	4.438 ★	3.94	1.81	2.19
1-9/16 1-5/8 1-11/16 1-3/4	4.13	3.13	0.75	4.250 ★	4.13	----	7/16	5/8	4.25	4.438 ★	2.81	2.88	2.75	5.000 ★	4.50	1.88	2.25
1-7/8 1-15/16 2	4.25	3.25	0.88	4.750 ★	4.50	----	5/8	5/8	4.75	4.812 ★	3.06	3.06	2.88	5.313 ★	4.75	1.94	2.31
2-1/8 2-3/16 2-1/4	4.56	3.50	0.88	5.250 ★	5.06	----	5/8	5/8	5.25	5.375 ★	3.44	3.31	3.19	6.000 ★	5.38	2.06	2.50
2-3/8 2-7/16 2-1/2	5.06	4.00	1.00	5.750 ★	5.31	----	3/4	5/8	5.75	5.687 ★	3.81	3.50	4.09	6.375 ★	5.69	2.31	2.75
2-5/8 2-11/16 2-3/4 2-13/16 2-7/8 2-15/16 3	5.75	4.44	1.00	6.500 ★	6.19	----	3/4	3/4	6.50	6.562 ★	4.44	4.19	4.50	7.313 ★	6.50	2.63	3.13
3-3/16 3-1/4 3-3/8 3-7/16 3-1/2	6.38	5.00	1.25	7.750 ★	7-5/8	----	3/4	3/4	5.38	8.000 ❤	5.06	4.88	5.56	8.625 ♦	8.00	2.94	3.44
3-11/16 3-3/4 3-7/8 3-15/16 4	8.50	6.25	1.50	9.250 ★	9.00	----	3/4	3/4	6.13	9.500 ❤	6.25	5.63	6.38	10.250 ♦	9.75	4.25	4.25
4-7/16 4-1/2	9.50	6.63	1.75	10.500 ★	10-1/16	----	3/4	3/4	6.75	10.625 ❤	7.25	6.19	6.69	11.125 ♦	10.06	4.75	4.75
4-15/16 5	10.50	7.38	2.00	11.750 ★	10-7/8	----	3/4	3/4	7.38	11.500 ❤	8.00	6.63	7.44	12.500 ♦	11.88	5.25	5.25
5-7/16 5-15/16 6	12.00	8.50	2.25	13.500 ★	13.00	----	3/4	3/4	8.25	14.000 ❤	9.50	7.88	8.56	14.750 ✳	14.13	6.00	6.00
6-1/2 6-15/16 7	13.50	9.31	----	14.750 ★	----	9.81	1	1	8.88	----	11.00	----	10.88	18.000 ✳	17.00	6.75	6.75
7-15/16 8	14.50	9.94	----	16.250 ★	----	10.06	1	1	9.63	----	12.50	----	12.50	20.125 ✳	19.13	7.25	7.25
8-1/2 9 9-1/2 10	17.00	11.50	----	19.500 ★	----	11.75	1	1	11.25	----	14.63	----	14.50	24.000 ✳	23.50	8.50	8.50
11 12	18.50	12.75	----	23 .000 ★	----	13.25	1	1	13.00	----	17.00	----	17.63	28.500 ✳	28.00	9.25	9.25

★ +.000 -.002"
❤ -.000 -.004"
♦ +.000 -.003"
✳ +.000 -.004"

FEATURES/BENEFITS PAGE B11-3	SPECIFICATION B11-20	HOW TO ORDER B11-21	SELECTION PAGE B11-23

SELECTION/DIMENSIONS

Special Duty Hinged Cap Pillow Block - Inch

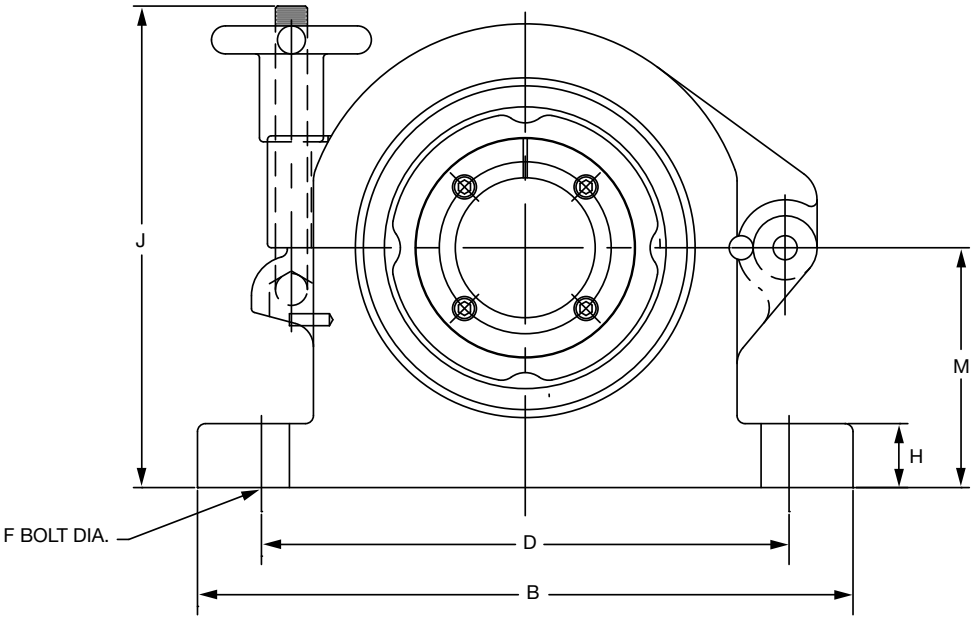

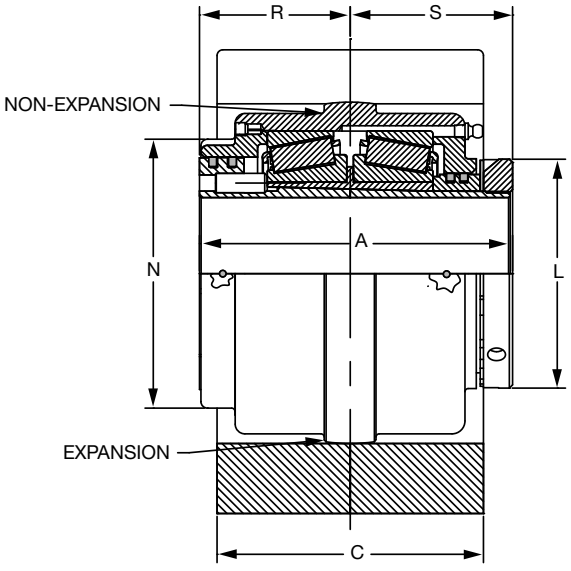



Special Duty Hinged Cap Pillow Block - Inch

Pillow Block Assembly - Non-Expansion*				Pillow Block Assembly - Expansion			
Shaft Size Inches #	Part Number	Part Name	Weight Lbs (Approx)	Shaft Size Inches #	Part Number	Part Name	Weight Lbs (Approx)
1-3/8	**067054**	P2B-HC-106	20	1-3/8	**067055**	P2B-HC-106E	20
1-7/16	**067050**	P2B-HC-107	20	1-7/16	**067051**	P2B-HC-107E	20
1-1/2	**067056**	P2B-HC-108	20	1-1/2	**067057**	P2B-HC-108E	20
1-11/16	**067048**	P2B-HC-111	27	1-11/16	**067049**	P2B-HC-111E	27
1-3/4	**067042**	P2B-HC-112	27	1-3/4	**067043**	P2B-HC-112E	27
1-15/16	**067052**	P2B-HC-115	36	1-15/16	**067053**	P2B-HC-115E	36
2	**067060**	P2B-HC-200	36	2	**067061**	P2B-HC-200E	36
2-3/16	**067046**	P2B-HC-203	47	2-3/16	**067047**	P2B-HC-203E	47
2-7/16	**067044**	P2B-HC-207	60	2-7/16	**067045**	P2B-HC-207E	60
2-15/16	**067072**	P2B-HC-215	60	2-15/16	**067073**	P2B-HC-215E	60

* Furnished Unless Otherwise Specified

\# Consult DODGE For Sizes Not Listed.

Pillow Block Housing Only Non-Expansion				Pillow Block Housing Only Expansion			
Shaft Size Range Symbol#	Part Number	Part Name	Weight Lbs (Approx)	Shaft Size Range Symbol#	Part Number	Part Name	Weight Lbs (Approx)
106 TO 108	**067007***	HS2-HC-406	13	106 TO 108	**067016**	HS2-HC-406E	13
111 TO 112	**067100***	HS2-HC-444	16	111 TO 112	**067103**	HS2-HC-444E	16
115 TO 200	**067031***	HS2-HC-481	23	115 TO 200	**067034**	HS2-HC-481E	23
203	**067120***	HS2-HC-538	26	203	**067123**	HS2-HC-538E	26
207	**067135***	HS2-HC-569	40	207	**067138**	HS2-HC-569E	40
215	**067078***	HS2-HC-656	52	215	**067075**	HS2-HC-656E	52

* Furnished Unless Otherwise Specified

\# Consult DODGE For Sizes Not Listed.

Shaft Size Inches	A	B	C	D	F Dia Bolt	H	J	L	M	N	R	S
1-3/8 1-7/16 1-1/2	4.13	7.25	3.00	5.88	1/2	.75	6.88	2.44	2.88	3.25	1.94	2.19
1-11/16 1-3/4	4.25	8.25	3.25	6.88	1/2	.75	6.88	2.81	3.13	3.53	2.00	2.25
1-15/16 2	4.44	9.25	3.50	7.69	5/8	.88	7.63	3.06	3.25	3.81	2.13	2.31
2-3/16	4.75	10.25	4.00	8.25	3/4	1.00	7.63	3.44	3.75	4.22	2.25	2.50
2-7/16	5.53	10.25	4.25	8.25	3/4	1.00	9.63	3.81	4.50	4.63	2.56	2.75
2-15/16	6.06	11.13	4.75	9.13	3/4	1.25	10.13	4.44	5.00	5.25	2.94	3.13

FEATURES/BENEFITS PAGE B11-3	SPECIFICATION B11-20	HOW TO ORDER B11-21	SELECTION PAGE B11-23

SELECTION/DIMENSIONS

Special Duty Hinged Cap S-1 Units - Inch

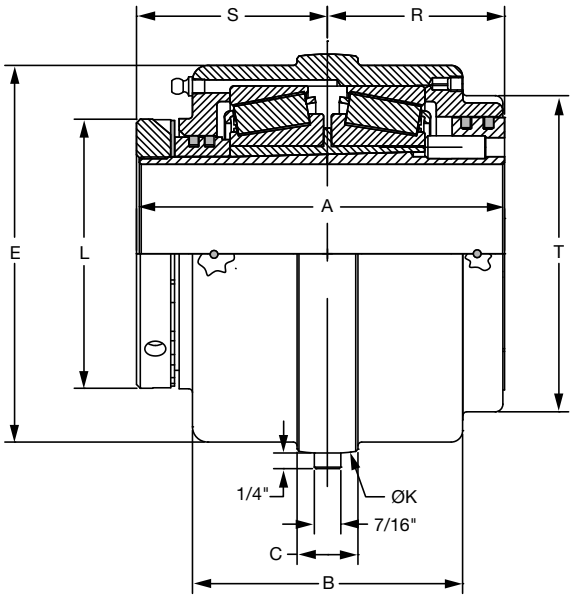

Hinged Cap Pillow Block S-1 Units

Shaft Size #	Part Number	Part Name	Weight Lbs Approx
1-3/8	**067149**	S1U406-HC-106	8
1-7/16	**067151**	S1U406-HC-107	8
1-1/2	**067152**	S1U406-HC-108	8
1-11/16	**067153**	S1U444-HC-111	10
1-3/4	**067154**	S1U444-HC-112	10
1-15/16	**067155**	S1U481-HC-115	11
2	**067156**	S1U481-HC-200	11
2-3/16	**067157**	S1U538-HC-203	16
2-7/16	**067159**	S1U569-HC-207	19
2-15/16	**067164**	S1U656-HC-215	30

Consult DODGE For Sizes Not Listed

Hinged Caps S-1 Units

Shaft Size Inches	A	B	C	E	K	L	R	S	T
1-3/8 1-7/16 1-1/2	4.13	2.69	0.75	3.75	4.06	2.44	1.94	2.19	3.25
1-11/16 1-3/4	4.25	3.13	0.75	4.13	4.44	2.81	2.00	2.25	3.53
1-15/16 2	4.44	3.25	0.88	4.50	4.81	3.06	2.13	2.31	3.81
2-3/16	4.75	3.50	0.88	5.06	5.38	3.44	2.25	2.50	4.22
2-7/16	5.31	4.00	1.00	5.31	5.69	3.81	2.56	2.75	4.63
2-15/16	6.06	4.44	1.00	6.19	6.56	4.44	2.94	3.13	5.25

FEATURES/BENEFITS PAGE B11-3	SPECIFICATION B11-20	HOW TO ORDER B11-21	SELECTION PAGE B11-23



Special Duty Traction Wheel Hub Assemblies - Inch

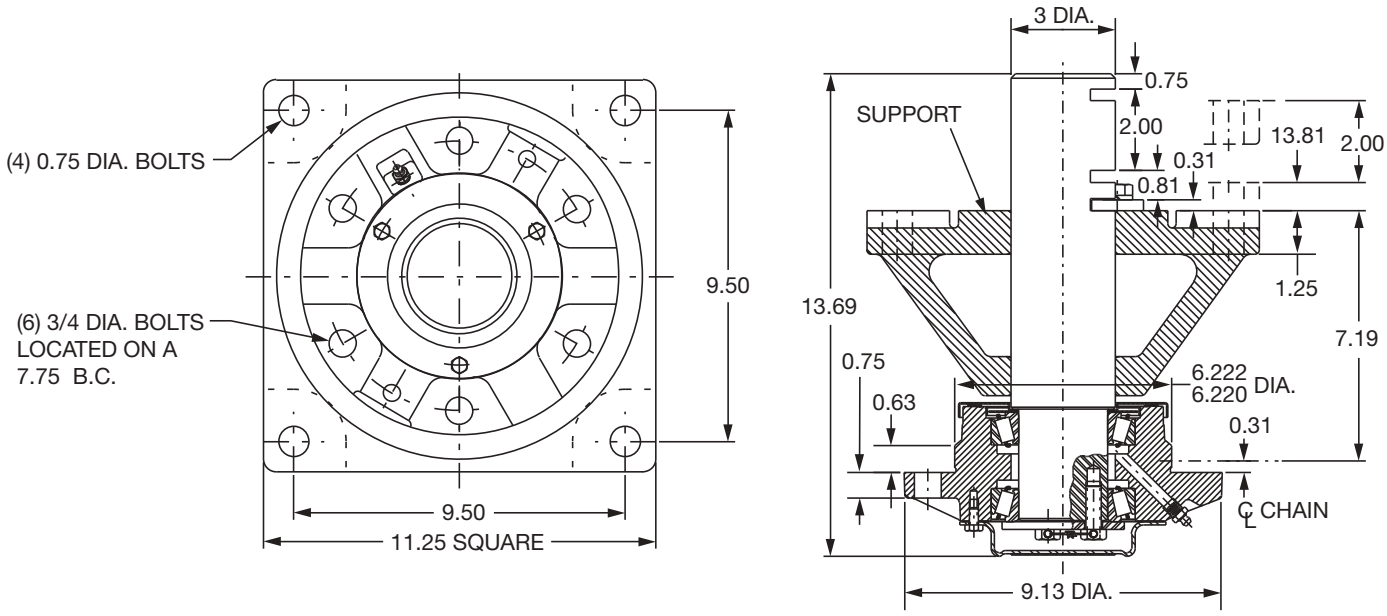

Traction Wheel Hub Assemblies are constructed to operate with wheels (sprockets) ranging from two to six feet in diameter. Commonly used in overhead chain conveyors, the units bolt directly to the supporting structure and can be adjusted vertically to three different operating positions.

The hub utilizes combination seals to protect the tapered roller bearings from dust and dirt and retain lubricant.

A high temperature (700°F) unit using sleeve bearings is available. See part number 062070

Traction Wheel Hub Assemblies				Recommended For Conveyors With Chain Nos.	Operating Characteristics		
Size #	Part Number	Part Name	Weight Lbs (Approx)		RPM	Max. Resultant Load (Lbs)▲	L_{10} Hours Life
#70	**062040**	TRW-70	100	348	10	3600	
#70LS*	**422604**	TRW-70LS	80	458	10	8000	★
75HT	**062070**	TRW-75HT	100	678	10	8000	

Consult DODGE For Sizes Not Listed.

▲ Based on 180- Chain Wrap

★ More Than 100,000 Hrs. Life

* (LS) Less Support - Support For Mounting To Structure Not Included With This Part

(HT) High Temperature Sleeve Bearing

FEATURES/BENEFITS PAGE B11-3	SPECIFICATION B11-20	HOW TO ORDER B11-21	SELECTION PAGE B11-23

SPECIFICATION

All Steel

The standard housing material for All steel mounted bearings is cast steel having a minimum tensile strength of 70,000 psi. The housing is vertically split to enable servicing of the bearing internal components. All Steel pillow blocks are available in both expansion and non expansion types.

All Steel mounted bearings have duplex tapered roller mounted to the shaft with a tapered adaptor sleeve extending thru the complete length of the pillow block. The tapered roller bearings used in the All Steel mounted bearings all have case carburized inner races (cones), outer race (cup) and rollers.

All Steel mounted bearings have two piston ring seals running in grooves in the adapter nuts at each end of the pillow block to seal the bearings both on and off the shaft.



ALL STEEL PILLOW BLOCKS AVAILABLE IN 4-BOLT BASE 2-11/16” TO 5”



ALL STEEL CARTRIDGE UNITS AVAILABLE IN 2-11/16” TO 4-7/16”

FEATURES/BENEFITS PAGE B11-4	HOW TO ORDER B11-47	SELECTION PAGE B11-49	SELECTION/DIMENSIONS PAGE B11-54



All Steel

There are two ways to specify DODGE Bearings. Most of the product offering have part numbers with listings shown throughout this catalog. Use of part numbers ensures accurate order processing.

When part numbers are not shown, the product may be specified by description or part name. This method is used when ordering units that include modifications or options. To order by description, use the nomenclature key shown on the next page and add any special instructions to the end of the description for options not covered by the nomenclature.

SPECIAL BEARING REQUIREMENTS AND SPECIAL LUBRICANTS

DODGE All Steel Bearings are factory assembled and pre-lubricated. For applications where extreme ambient temperatures, high speeds or high loads are expected, a variety of specialty lubricants and adjustments are available. Standard grease provided is Mobilgrease XHP222. Special lubricant options usually involve set-up charges and premiums. To order, specify type of lubricant required at the end of the product name or after the standard part number.

Example:

063360 except with Mobil Grease HTS #2 grease

and or

P4B-AS-215 except with Mobil Grease HTS #2 grease

OTHER SPECIAL BEARING REQUIREMENTS NOT LISTED

For applications requiring modifications not listed, we encourage you to contact out Customer Order Engineering Department for Bearings at 864-284-5700.

NOMENCLATURE

Specialty Tapered Products

P2B - C - 207 - E

HOUSING STYLE STYLE

P2B = PILLOW BLOCK
2 BOLT, CAST IRON

P4B = PILLOW BLOCK
4 BOLT, CAST IRON

SP4B = PILLOW BLOCK
4 BOLT, CAST STEEL

F4B = FLANGE BEARING
4 BOLT, CAST IRON

B1U = B-1 UNIT, CAST IRON

DU = D UNIT, CAST IRON

S1U = S-1 UNIT, CAST IRON

CRT = CARTRIDGE UNIT
DUCTILE IRON END PLATES

NSTU = NARROW SLOT TAKE UP
BEARING, CAST IRON

HNG = HANGER BEARING CAST IRON

BEARING TYPE

C = TYPE C

SD = SPECIAL DUTY

HC = HINGED CAP

TRW - TRACTION WHEEL

AS = ALL STEEL

SIZE

INCHES & 16TH
2 = 2 INCHES
07 = 7/16 INCHES
OR
207 = 2-7/16”

OTHER DATA

E = EXPANSION TYPE BEARING

IF E DOES NOT APPEAR AFTER SEAL TYPE, THEN BEARING IS NON-EXPANSION TYPE



All Steel

DODGE ALL-STEEL DOUBLE ROW TAPERED ROLLER BEARINGS DODGE All-Steel Double Row Tapered Roller Bearings have the capacity to carry heavy radial loads and combined radial and thrust loads. The maximum recommended load which can be applied is limited by various components in the system such as bearing, housing, shaft, shaft attachment, speed and life requirements as listed in this catalog. DODGE tapered roller bearings have been applied successfully even when these limits have been exceeded under controlled operating conditions. Contact DODGE Application Engineering (864) 284-5700 for applications which exceed the recommendations of this catalog.**L_{10} Hours Life -** The life which may be expected from at least 90% of a given group of bearings operating under identical conditions.

$$L_{10} = \left(\frac{C_{90}}{P}\right)^{10/3} X \left(\frac{1{,}500{,}000}{RPM}\right)$$

Where:

C_{90} = Dynamic Capacity (Table 10, pg. B11-52), lbs.

P = Equivalent Radial Load, lbs.

GENERAL

Heavy Service - For heavy shock loads, frequent shock loads, or severe vibrations, add up to 50% (according to severity of conditions) to the Equivalent Radial Load. Consult DODGE Application Engineering for additional selection assistance.

Thrust load values shown in the table below are recommended as a guide for general applications that will give adequate L_{10} life for pillow blocks. The maximum thrust load should not exceed values shown on Table 12. Where substantial radial load is also present, it is advisable to calculate actual L_{10} life to assure that it meets the requirements. The effectiveness of the shaft attachment to carry thrust load depends on proper tightening, shaft tolerance (see table below) and shaft deflections. Therefore, it is advisable to use auxiliary thrust carrying devices such as shaft shoulder, snap ring or a thrust collar to locate the bearing under thrust loads heavier than shown below, or where extreme reliability is desired.

RPM Range	20 - 200	201 - 2000
RECOMMENDED THRUST LOAD	$C_{90}/4$	$C_{90}/8$

The shaft tolerances recommended below are adequate for normal radial and radial/thrust load applications. Since the allowable load, especially at a low speed, is very large, the shaft should be checked to assure adequate shaft strength.

The magnitude and direction of both the thrust and radial load must be taken into account when selecting a housing. **When pillow blocks are utilized, heavy loads should be directed through the base. Where uplift loads are involved, see Table 15, pg. B11-53 for maximum values.** Where a load pulls the housing away from the mounting base, both the hold-down bolts and housing must be of adequate strength. Auxiliary load carrying devices such as shear bars are advisable for side or end loading of pillow blocks and radial load for flange units.

Shaft Size	Tolerance, Inches
2-11/16- 4	+.000 To -.004”
4-7/16 - 5	+.000 To -.005”

SELECTION



All Steel

SELECTING BEARINGS SUPPORTING RADIAL LOADS ONLY

1. Define L_{10} Life Hours desired.
2. Establish bearing radial load, F_R
   (FR = P for Pure Radial Load Conditions).
   The DODGE program BEST™* can be used to find application loads.
3. Establish RPM.

Using the easy selection Table 11, pg. B11-52 find, under the RPM column, the equivalent radial load that equals or is higher than the application radial load for the desired life. The shaft size on the far left will be the minimum shaft size that you can use for your application. If the desired life is different than the values shown on the chart, use alternate Method A shown below.

Example: 1. L_{10} Life = 30,000 Hours
2. Radial load = 3800 lbs.
3. RPM = 1,000

At the intersection of the 1,000 RPM column and the 30,000 hours L_{10} life row, the equivalent radial load of 4478 lbs. Exceeds the 3800 lbs. Radial load for shaft sizes 2-11/16 -3". A bearing with bore ranging from 2-11/16 to 3" may be used for this application.

ALTERNATE METHOD A - SELECTING A BEARING FOR AN L_{10} LIFE VALUE NOT SHOWN IN THE EASY SELECTION CHART.

The L_{10} life equation can be rearranged so that the bearing dynamic capacity C is identified in terms of L_{10}, RPM and P.

$$C_{90} = \left(\frac{L_{10} \text{ X RPM}}{1{,}500{,}000} \right)^{0.3} \text{ X } P$$

(P = FR for Pure Radial Load Conditions)

Since the L_{10}, RPM, and P are known, solve for C_{90}. Select from the dynamic capacity column on Table 10, pg. B11-52 the C_{90} value equal to or greater than the C_{90} value just calculated. The bore size on the far left represents the bore size selection. Check that the application RPM does not exceed the MAX. RPM on Table 10. When selecting an L_{10} life of less than 30,000 hours, particular attention must be paid to shaft deflection and proper lubricant selection.

SELECTING BEARINGS SUPPORTING COMBINATION RADIAL AND THRUST LOADS

When a bearing supports both a radial load and a thrust load, the loading on the two rows is shared unequally depending on the ratio of thrust to radial load. The use of the X (radial factor) and Y (thrust factor) from Table 10 converts the applied thrust load and radial loads to an equivalent radial load having the same effect on the life of the bearing as a radial load of this magnitude.

The DODGE Bearing Evaluation and Selection Technique (BEST) is a menu driven computer program that calculates bearing loads, fatigue life and operating temperature for a two bearing shaft system based on user supplied input parameters. This interactive program is available at www.ptwizard.com under the Product Selection area.



All Steel

The equivalent radial load P = $XF_R + YF_A$

Where:

P = Equivalent radial load, lbs.
FR = Radial load, lbs.(see Table 10 for allowable slip fit maximum)
F_A = Thrust (axial) load, lbs.
e = Thrust load to radial load factor (Table 10)
X = Radial load factor (Table 10)
Y = Thrust load factor (Table 10)

To find X and Y, calculate F_A/F_R and compare to e for the selected bore size. Determine X and Y from Table 10, depending on whether F_A/F_R is equal to or less than **e**, or F_A/F_R is greater than **e**. Substitute all known values into the equivalent radial load equation. P (equivalent radial load) can be used in the life formula to determine L_{10}, or it can be compared to the allowable equivalent radial load ratings for the speed and hours life desired in the easy selection Table 11, pg. B11-52.

SELECTING BEARINGS SUPPORTING ONLY THRUST LOADS

Tapered Roller Bearings perform extremely well under pure thrust load applications. Use $P = YF_A$ for the equivalent radial load. The value of Y is obtained from Table 1, pg. for F_A/F_R>**e**. Substitute Y and F_A into the equivalent load equation. P (equivalent radial load) can be used in the life formula to determine L_{10} or it can be compared to the allowable equivalent radial load ratings for the speed and hours life desired in the easy selection Table 11, pg. B11-52.

LUBRICATION

DODGE All Steel Double Row Tapered roller bearings are lubricated at the factory with a superior industrial grease that uses a lithium hydroxystearate thickener and highly refined base oil. This grease will adequately handle low and medium speeds with low and medium loads at normal temperatures as defined on Table 14, pg. B11-53. For very low and high speeds, for heavy loads and for low and high temperatures, special greases must be used. Contact DODGE Application Engineering (864) 284-5700. DODGE engineers will recommend bearings and lubricants for the above unusual conditions. DODGE also has the expertise to custom design and build special bearings for your needs. The only maintenance requirement for DODGE Tapered roller bearings is periodic relubrication at regular intervals as outlined in the appropriate instruction manuals.

INSTALLATION AND MAINTENANCE

In nearly all applications good design practice requires two bearings supporting the shaft. In cases where three or more bearings are installed, unless precautions are taken to line the bearings up, both vertically and horizontally, it is possible to induce heavy loads. In the case of two bearings, alignment is not as critical, especially with DODGE All Steel Double Row Tapered Roller Bearings. All Steel bearings are designed to allow as much as 1° to 2° of static misalignment depending on bore size. To ensure good alignment, mounting surfaces must be checked for flatness and must lie in the same plane. When tightening base bolts and cap bolts, each bolt should be alternately tightened in incremental torque values until full torque is achieved. Shimming may be required to minimize misalignment.

SELECTION



All Steel

Table 10: All Steel Double Row Tapered Roller Bearings Radial and Thrust Factors

Shaft Size	e	Fa/Fr ≤ e		Fa/Fr>e		Dynamic Capacity C_{90}*		Maximum RPM
		X	Y	X	Y	Lbs.	Newtons	
2-11/16 - 3	0.43	0.87	2.02	0.70	2.44	11,000	48,945	1,880
3-1/4 - 3-1/2	0.49	0.87	1.77	0.70	2.14	21,000	93,441	1,520
3-15/16 - 4	0.34	0.87	2.53	0.70	3.06	23,000	102,340	1,340
4-7/16 - 4-1/2	0.36	0.87	2.45	0.70	2.96	34,500	153,510	1,210
4-15/16 - 5	0.34	0.87	2.53	0.70	3.06	35,400	157,515	1,070

COMPARING SPHERICAL TO TAPER ROLLER BEARING

The dynamic capacity C (spherical) and C_{90} (taper) are not to the same base. To compare basic dynamic capacities, multiply C x .259 and compare to C_{90}.

★ C_{90}- Dynamic capacity based on a rated life of 90 million revolutions or 3000 hours at 500 RPM

Table 11: Easy Selection Table Dodge All-steel Double Row Tapered Roller Bearings

Shaft Size	Hours Life	Allowable Equivalent Radial Load Rating (Lbs.) at Various Revolutions Per Minute *															
		50	100	250	500	750	1000	1070	1210	1340	1520	1880	2180	2300	2700	2900	3250
2-11/16 2-15/16 3	5,000	18,829	15,294	11,618	9,437	8,356	7,665	7,511	7,239	7,021	6,760	6,343	6,067	5,971	5,690	5,569	5,382
	10,000	15,294	12,423	9,437	7,665	6,787	6,226	6,101	5,880	5,703	5,491	5,152	4,928	4,850	4,622	4,524	4,372
	30,000	11,000	8,935	6,787	5,513	4,882	4,478	4,388	4,229	4,102	3,949	3,705	3,544	3,488	3,324	3,254	3,144
	50,000	9,437	7,665	5,823	4,730	4,188	3,842	3,765	3,628	3,519	3,388	3,179	3,041	2,992	2,852	2,791	2,698
	100,000	7,665	6,226	4,730	3,842	3,402	3,120	3,058	2,947	2,858	2,752	2,582	2,470	2,431	2,316	2,267	2,191
3-1/4 3-7/16 3-1/2	5,000	35,947	29,198	22,181	18,016	15,953	14,634	14,340	13,820	13,404	12,906	12,109	11,583	11,398	10,863	10,633	10,275
	10,000	29,198	23,716	18,016	14,634	12,958	11,886	11,647	11,226	10,887	10,483	9,836	9,408	9,258	8,823	8,636	8,346
	30,000	21,000	17,057	12,958	10,525	9,319	8,549	8,377	8,074	7,830	7,540	7,074	6,767	6,659	6,346	6,211	6,003
	50,000	18,016	14,634	11,117	9,030	7,995	7,334	7,187	6,927	6,718	6,468	6,069	5,805	5,713	5,444	5,329	5,150
	100,000	14,634	11,886	9,030	7,334	6,494	5,957	5,838	5,626	5,457	5,254	4,929	4,715	4,640	4,422	4,328	4,183
3-15/16 4	5,000	39,371	31,979	24,293	19,732	17,472	16,027	15,705	15,137	14,680	14,135	13,262	12,686	12,484	11,897	11,645	11,254
	10,000	31,979	25,975	19,732	16,027	14,192	13,018	12,757	12,295	11,924	11,482	10,772	10,304	10,140	9,664	9,459	9,141
	30,000	23,000	18,682	14,192	11,527	10,207	9,363	9,175	8,843	8,576	8,258	7,748	77,411	7,293	6,950	6,803	6,574
	50,000	19,732	16,027	12,175	9,889	8,757	8,033	7,871	7,586	7,358	7,085	6,647	6,358	6,257	5,963	5,836	5,640
	100,000	16,027	13,018	9,889	8,033	7,113	6,525	6,394	6,162	5,976	5,754	5,399	5,164	5,082	4,843	4,741	4,581
4-7/16 4-1/2	5,000	59,056	47,968	36,440	29,598	26,208	24,041	23,558	22,705	22,020	21,203	19,893	19,029	18,726	17,846	17,468	16,881
	10,000	47,968	38,962	29,598	24,041	21,288	19,527	19,135	18,442	17,886	17,222	16,158	15,456	15,210	14,496	14,188	13,711
	30,000	34,500	28,023	21,288	17,291	15,311	14,045	13,762	13,264	12,864	12,387	11,622	11,117	10,939	10,426	10,204	9,862
	50,000	29,598	24,041	18,263	14,834	13,135	12,049	11,807	11,379	11,036	10,627	9,970	9,537	9,385	8,944	8,755	8,460
	100,000	24,041	19,527	14,834	12,049	10,669	9,787	9,590	9,243	8,964	8,632	8,098	7,747	7,623	7,265	7,111	6,872
4-15/16 5	5,000	60,597	49,220	37,390	30,370	26,892	24,668	24,173	23,297	22,595	21,756	20,412	19,526	19,214	18,312	17,923	17,321
	10,000	49,220	39,979	30,370	24,668	21,843	20,037	19,634	18,923	18,353	17,672	16,580	15,860	15,607	14,874	14,558	14,069
	30,000	35,400	28,754	21,843	17,742	15,710	14,411	14,121	13,610	13,200	12,710	11,925	11,407	11,225	10,698	10,471	10,119
	50,000	30,370	24,668	18,739	15,221	13,478	12,363	12,115	11,676	11,324	10,904	10,230	9,786	9,630	9,178	8,983	8,681
	100,000	24,668	20,037	15,221	12,363	10,947	10,042	9,840	9,484	9,198	8,857	8,310	7,949	7,822	7,455	7,296	7,051

All Steel

Table 12: All-steel Pillow Block Housing Permissible Thrust Load, Lbs.

Bore Size, Inches	Max. Thrust (Lbs.)
2-11/16 - 3	9300
3-1/4 - 3-1/2	13800
3-15/16 - 4	13300
4-7/16 - 4-1/2	10400
4-15/16 - 5	14000

Table 13: All-steel Pillow Block And Cartridge Total Expansion Capability

Bore Size, Inches	Expansion (Inches)
2-11/16 - 3	3/8
3-1/4 - 3-1/2	3/8
3-15/16 - 4	3/8
4-7/16 - 4-1/2	3/8
4-15/16 - 5	25/64

Table 14: Definition Of Operating Conditions For Tapered Roller Bearings

Low Speed	Up To 20% Of Max. RPM (Table 10)
Medium Speed	Over 20% To 80% Of Max. RPM
High Speed	Over 80% Of Max. RPM
Light Load	Up To 30% Of C_{90} (Table 10)
Normal Load	Over 30% To 70% Of C_{90}
Heavy Load	Over 70% Of C_{90}
Low Temperature	-100°F To 20°F
Medium Temperature	Over 20°F To 200°F
High Temperature	Over 200°F To 300°F
Very High Temperature	Over 300°F To 400°F

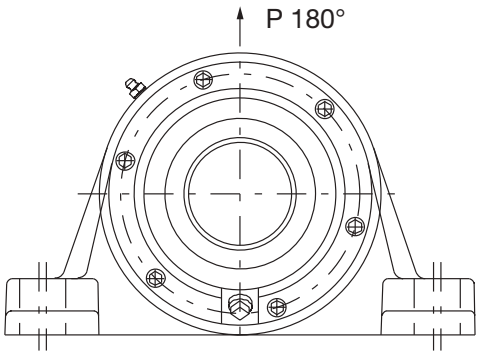

Table 15: Housing Ratings All-steel Pillow Block

SHAFT SIZE, (INCHES)	HOUSING STRENGTH, LBS.
	180°
2-11/16 - 3	30000
3-1/4 - 3-1/2	32000
3-15/16 - 4	34000
4-7/16 - 4-1/2	39000
4-15/16 - 5	39000

SELECTION/DIMENSIONS

All Steel Pillow Block - Inch
4-BOLT BASE

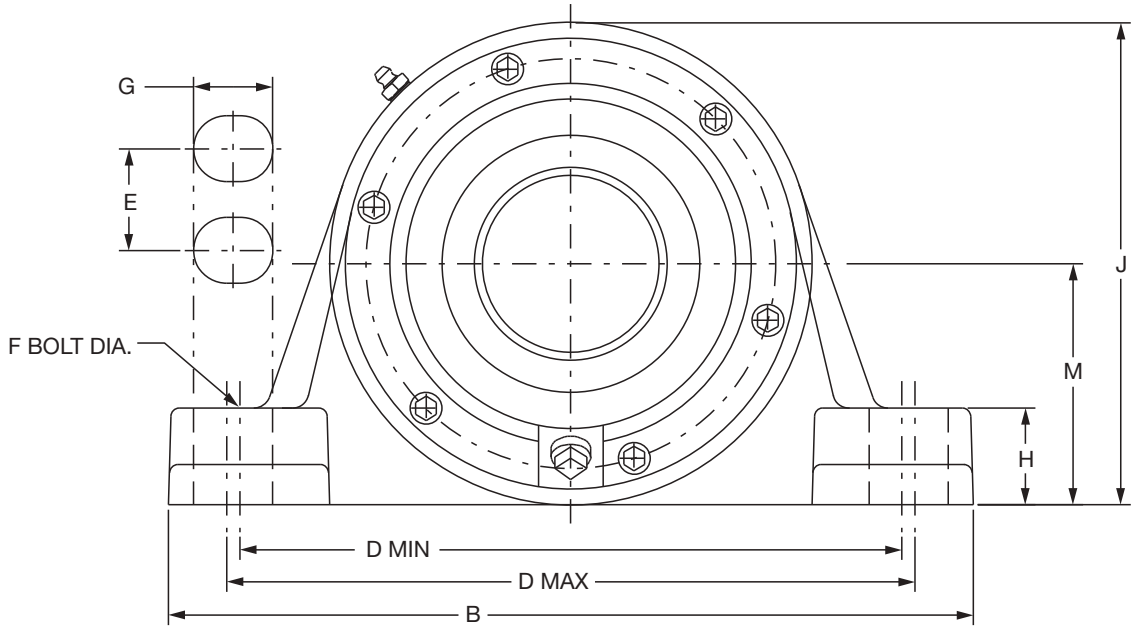

NOTE: All sizes use a 1/8 - 27 NPT hydraulic grease fitting

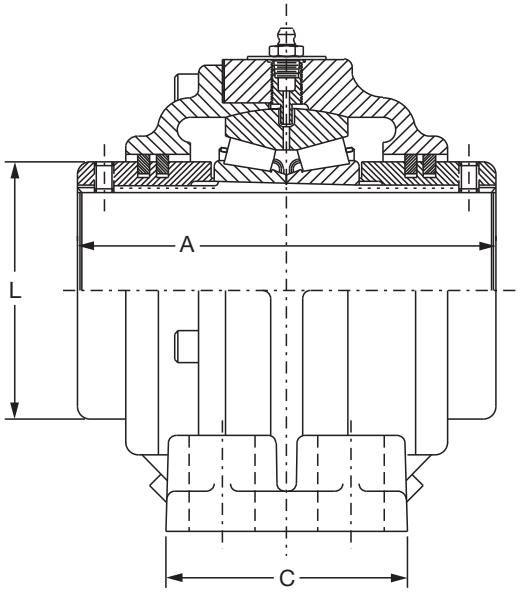

NON-EXPANSION CONSTRUCTION

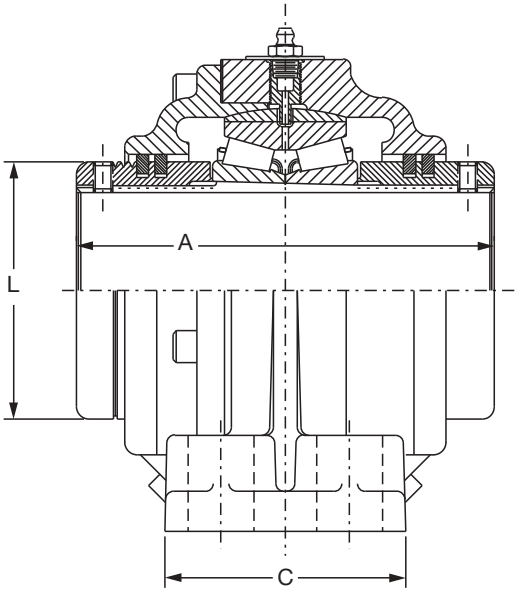

EXPANSION CONSTRUCTION



All Steel Pillow Block - Inch
4-BOLT BASE

Cast Steel Non-Expansion*				Cast Steel Expansion			
Shaft Size Inches #	Part Number	Part Name	Weight Lbs Approx	Shaft Size Inches #	Part Number	Part Name	Weight Lbs Approx
2-11/16	**063359**	SP4B-AS-211	45	2-11/16	**063389**	SP4B-AS-211E	45
2-15/16	**063360**	SP4B-AS-215	42	2-15/16	**063390**	SP4B-AS-215E	42
3	**063361**	SP4B-AS-300	41	3	**063411**	SP4B-AS-300E	41
3-7/16	**063362**	SP4B-AS-307	77	3-7/16	**063392**	SP4B-AS-307E	77
3-1/2	**063363**	SP4B-AS-308	77	3-1/2	**063393**	SP4B-AS-308E	77
4-7/16	**063366**	SP4B-AS-407	149	4-7/16	**063396**	SP4B-AS-407E	149

* Furnished Unless Otherwise Specified

\# Consult DODGE For Sizes Not Listed.

Consult DODGE For Sizes Not Listed.

Shaft Size Inches	A	B	C	D		E	F Bolt Dia.	G	H	J	L	M	Exp*
				Min.	Max.								
2-11/16 2-15/16 3	6.50	12.50	3.75	10.31	10.69	2.00	5/8	0.94	1.63	7.50	4.00	3.75	3/8
3-7/16 3-1/2	7.75	14.50	4.50	11.88	12.63	2.38	3/4	1.13	1.88	9.00	4.69	4.50	3/8
4-7/16	9.75	18.75	5.25	14.81	15.69	3.25	7/8	1.31	2.25	11.38	6.00	5.75	3/8

* Total Expansion for Expansion Bearing Only

SELECTION/DIMENSIONS

All Steel Cartridge Units - Inch

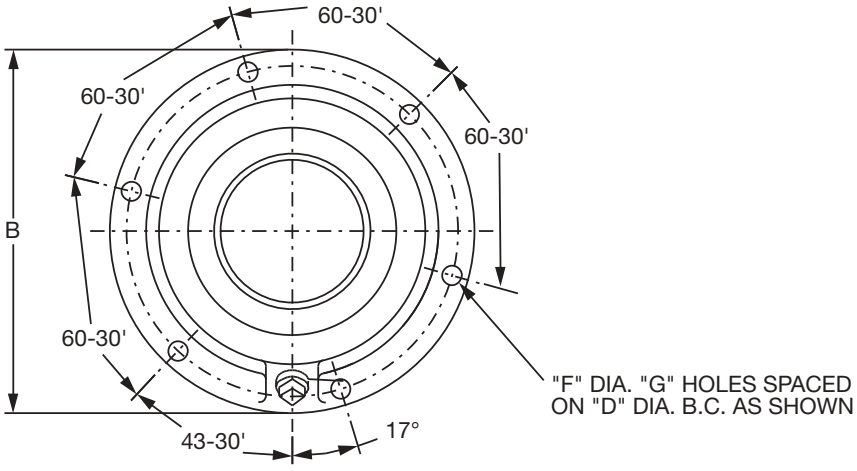

2-11/16" THRU 4-7/16" EXTERNAL CONSTRUCTION

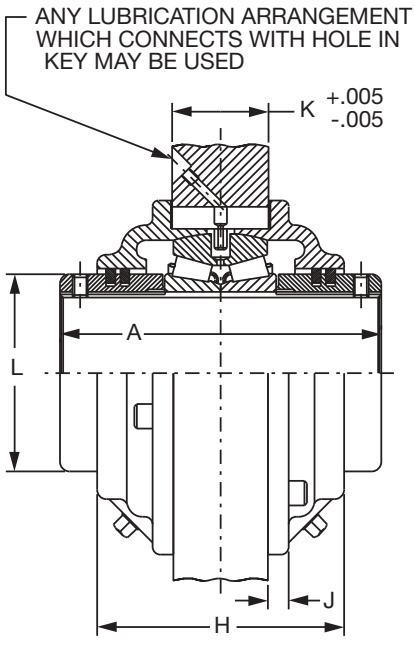

NON-EXPANSION INTERNAL CONSTRUCTION

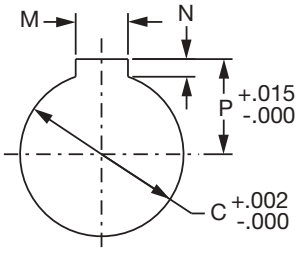

FRAME SIZE

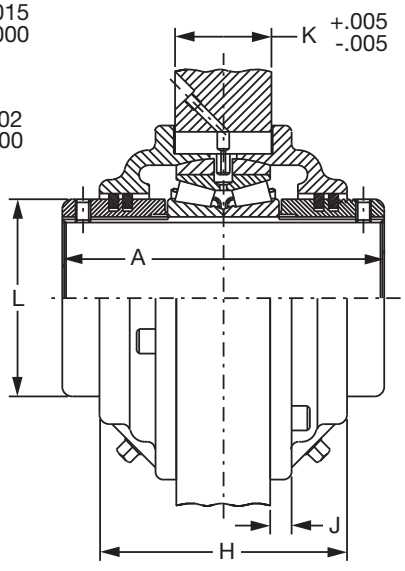

EXPANSION INTERNAL CONSTRUCTION



All Steel Cartridge Units - Inch

Cast Steel Non-Expansion*				Cast Steel Expansion			
Shaft Size Inches #	**Part Number**	**Part Name**	**Weight Lbs Approx**	**Shaft Size Inches #**	**Part Number**	**Part Name**	**Weight Lbs Approx**
2-11/16	**063420**	CRT-AS-211	30	2-11/16	**063450**	CRT-AS-211E	30
2-15/16	**063421**	CRT-AS-215	30	2-15/16	**063451**	CRT-AS-215E	30
3	**063422**	CRT-AS-300	30	3	**063452**	CRT-AS-300E	30
3-7/16	**063424**	CRT-AS-307	55	3-7/16	**063454**	CRT-AS-307E	55
3-15/16	**063426**	CRT-AS-315	65	3-15/16	**063456**	CRT-AS-315E	65
4-7/16	**063429**	CRT-AS-407	110	4-7/16	**063459**	CRT-AS-407E	110

* Furnished Unless Otherwise Specified

\# Consult DODGE For Sizes Not Listed.

\# Consult DODGE For Sizes Not Listed.

Shaft Size Inches	A	B	C	D	F Bolt Dia.	G	H	J	K	L	M	N	P	Exp*
2-11/16 2-15/16 3	6.50	7.13	5.70	6.38	3/8	6.00	4.88	0.38	2.19	4.00	1.00	5/8	3.43	3/8
3-7/16	7.75	8.75	7.20	7.13	7/16	6.00	6.03	0.84	2.75	4.69	1.00	5/8	4.19	
3-15/16	8.00	9.50	7.89	8.53	7/16	6.00	5.97	0.84	3.13	5.44	1.00	5/8	4.54	
4-7/16	9.25	10.84	9.07	9.88	1/2	6.00	7.00	0.50	3.50	6.06	1.00	5/8	5.13	

* Total Expansion for Expansion Bearing Only

NOTES

CONTENTS

S-2000

Features / Benefits B12-2
Specifications B12-4
How to Order B12-4
Nomenclature B12-5
Selection B12-7
Dimensions
- Pillow Block B12-14
- Flanges B12-30
- Piloted Flange B12-38
- Wide-Slot Take-Ups B12-42
- TP Take-Up B12-46
- Bearing Inserts B12-48
- End Cap B12-50

Part Number Index INDEX-1
Key Word Index KEYWORD-1

FEATURES/BENEFITS

S-2000

Longer Bearing Life By Design . . .

High capacity double row spherical rollers offer up to 250% more L_{10} life than competitive brands

- Larger rollers
- More contact area
- Case-carburized inner rings resist cracking
- Static or dynamic misalignment up to ± 1°
- Expansion capability up to 3/8" (9.5mm)

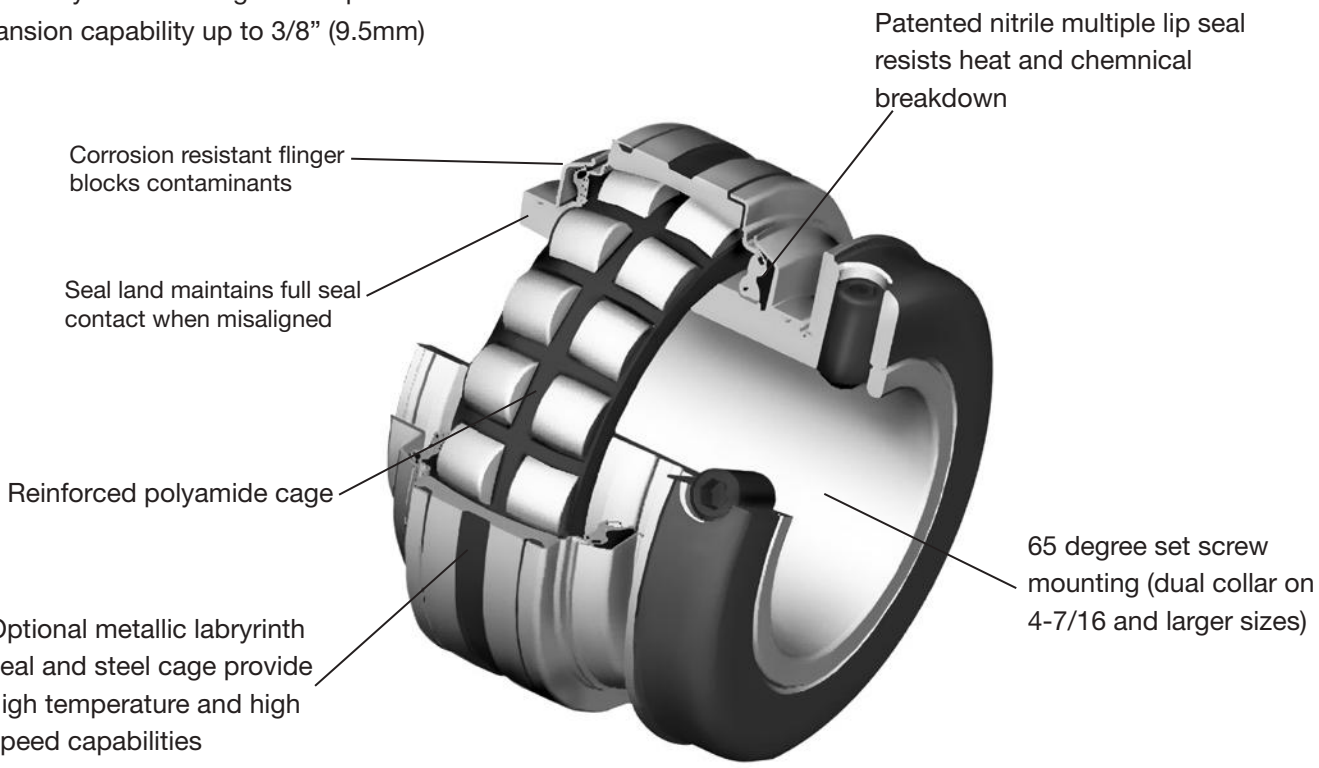

Installation Savings . . .

- Factory lubed, sealed and adjusted, ready to slip onto the shaft
- 65° Springlok collar mount for increased holding power versus 90° or 120°
- Field convertible from non-expansion to expansion and expansion to non-expansion
- Elongated pillow block bolt holes to facilitate mounting



S-2000 Bearings Offer Patented Seal Options To Maximize Bearing Life . . .

TRIDENT™ Seals for low to medium speed

- Face rubbing triple lip seal
- Flinger to shield seal and bearing from contamination/damage
- Seal/land positive contact up to ± 1° degree of misalignment
- Patented design

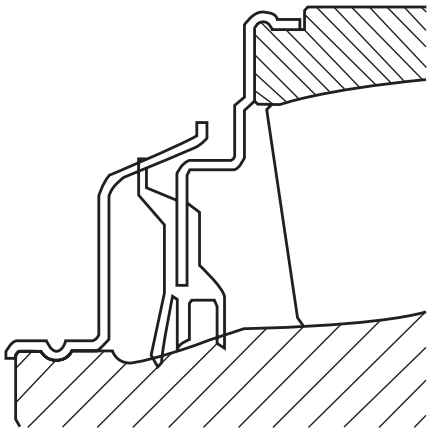

Labyrinth seals for higher speeds

- High speed for relatively clean environments
- Flinger shields seal and bearing from contamination/damage
- Seal operates with up to ± 1° degree of misalignment
- Patented design

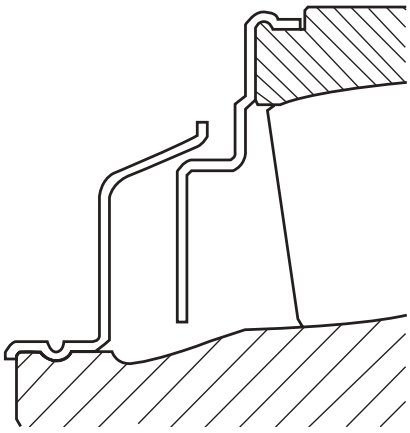

NOTE: Instruction manuals for Dodge bearings are available on www.dodge-pt.com

SPECIFICATION

S-2000

INCH

DODGE Spherical Bearings, including S-2000 bearings, are general purpose, high-capacity, double-row spherical roller bearings. All are mounted in single piece precision machined housings. Bearings are mounted to shafts by means of set screw collars, with 65 degree set screw spacing for maximum clamping force.

ASTM A48 Class 30 cast iron is the standard material used in S-2000 housings. A-27 Grade 70-36 Class 1 Steel is the standard material used in Steel S2000-HD housings. Housing designs are available for survival in extreme harsh environments, through the use of special finishes and stainless hardware.

Housings are available in a variety of standard configurations, including pillow blocks, flanges, piloted flanges and take-up bearings. TRIDENT triple lip contact seal and Labyrinth seals are available on S-2000 bearings.



HOW TO ORDER

There are two ways to specify DODGE Bearings. Most of the product offerings have part numbers with listings shown throughout this catalog. Use of part numbers ensures accurate order processing.

When part numbers are not shown, the product may be specified by description or part name. This method is used when ordering units that include modifications or options. To order by description, use the nomenclature key shown on page B12-5 and add any special instructions to the end of the description for options not covered by the nomenclature.

DODGE Spherical Bearings are factory adjusted and pre-lubricated. For applications where extreme ambient temperatures, high speeds, or high loads are expected, a variety of specialty lubricants is available. Standard grease provided is lithium complex base Mobilgrease XHP222. High temperature greases available include Mobil HTS #2. Other special lubricants are available upon request. Special lubricant options usually involve set-up charges, minimum quantities and list price premiums. To order, specify type of lubricant required at the end of the product name or after the standard part number.

Example: 070320 except with Mobil HTS #2 grease
or
P2BS2108L except with Mobil HTS #2 grease

For applications requiring modifications not listed, we encourage you to contact our Application Engineering Department for Bearings at 864-284-5700.

NOMENCLATURE

S-2000

S E P2B - S2 - 207 - R E

"E" prefix denotes Type E dimensioned housing with S2000 spherical roller bearing insert *

"S" prefix denotes cast steel housing

HOUSING STYLE

P2B =	Pillow Block 2-Bolt Base, Cast Iron
P4B =	Pillow Block 4-Bolt Base, Cast Iron
F3R =	Flange Bearing 3-Bolt, Cast Iron, Round
F4S =	Flange Bearing 4-Bolt, Cast Iron, Square
F4R =	Flange Bearing 4-Bolt, Cast Iron, Round
FC =	Piloted Flanged (Flanged Cartridge)
WSTU =	Wide Slot Take-Up Bearing For Use In Center-Pull Frames
TPHU =	TPHU Take-up Bearing For Use In TPHU Or Top Angle Take-Up Frames

BEARING TYPE

S2 = S-2000

SIZE

Inches and 16th

2 = 2"
07 = 7/16"
207 = 2-7/16"

SEAL

R =	TRIDENT Triple Lip Rubbing Seal
L =	Labyrinth Metallic Seal

OTHER DATA

E =	Expansion Type Bearing - If "E" Does Not Appear, Bearing Is Non Expansion Type

* Available in two or four bolt pillow blocks, four bolt square flanges and piloted flanges

FEATURES/BENEFITS PAGE B12-2	SPECIFICATION PAGE B12-4	SELECTION PAGE B12-7	DIMENSIONS PAGE B12-14

FEATURES/BENEFITS



S-2000-E





- Interchangeable with Type E style pillow blocks and flanges
- Same proven DODGE S-2000 double row spherical insert
- 65° springlock collar mounting
- Up to ±1° misalignment capability
- Seal land on OD of inner ring maintains full contact pressure even when misaligned
- High capacity double row spherical bearing

- 2-bolt pillow blocks in sizes 1-3/8 to 3-7/16”
- 4-bolt pillow blocks in sizes 2-7/16 to 4-15/16”
- Flange bearings in sizes 1-3/8 to 4-7/16”
- Piloted flange bearings in sizes 1-3/8 to 4-15/16”

S-2000-HD



Dodge S2000-HD mounted bearings feature proven S2000 technology deployed in steel housings designed specifically for harsh applications that demand superior housing strength. Major features include set screw mounting systems, high capacity cast steel housings with industry common dimensions, as well as high capacity, double row spherical inserts that are protected with either one of two effective sealing systems plus both closed & shaft-through end covers.

In addition, S2000-HD feature single piece, sealed inserts that can be easily replaced in the field, without the time & trouble of a bearing tear down & rebuild. Field conversion between Non-Expansion & Expansion (fixed & float) can also be accomplished with the repositioning of a single snap ring.

Housing configurations include two and four bolt base pillow blocks, and four bolt flanges.



S-2000
SPHERICAL ROLLER BEARINGS

DODGE Spherical Roller Bearings have the capacity to carry heavy radial loads and combined radial and thrust loads. The maximum recommended load which can be applied is limited by various components in the system such as bearing, housing, shaft, shaft attachment, speed and life requirements as listed in this catalog. DODGE spherical roller bearings have been applied successfully even when these limits have been exceeded under controlled operating conditions. Contact DODGE Application Engineering (864-284-5700) for applications which exceed the recommendations of this catalog.

L_{10} Hours Life - The life which may be expected from at least 90% of a given group of bearings operating under identical conditions.

$$L_{10}\text{ Life, Hours} = \left(\frac{C}{P}\right)^{10/3} X \left(\frac{16667}{RPM}\right)$$

Where: C = Dynamic Capacity (Table 1 on page B12-9) lbs.

P = Equivalent Radial Load, lbs.

GENERAL

Heavy Service - For heavy shock loads, frequent shock loads, or severe vibrations, add up to 50% (according to severity of conditions) to the Equivalent Radial Load to obtain a Modified Equivalent Radial Load. Consult DODGE Application Engineering for additional selection assistance.

Thrust load values shown in the table below are recommended as a guide for general applications that will give adequate L_{10} life. Spherical bearings require a radial load at least equal to the thrust load for proper operation. If the thrust load exceeds this limit, consult Application Engineering. Where substantial radial load is also present, it is advisable to calculate actual L_{10} life to assure that it meets the requirements. The effectiveness of the shaft attachment to carry thrust load depends on proper tightening of the set screws, shaft tolerance and shaft deflections. Therefore, it is advisable to use auxiliary thrust carrying devices such as shaft shoulder, snap ring or a thrust collar to locate the bearing under thrust loads heavier than shown below, or where extreme reliability is desired.

RPM	20-200	201 - 2000	Over 2000
Recommended Thrust Load	C/20	C/40	C/60

The shaft tolerances recommended below are adequate for normal radial and radial/thrust load applications. The radial load is limited by the attachment to the shaft (see Table 1 on page B12-9). Where the applied radial load (F_R) exceeds this limit (maximum allowable slip fit radial load), a snug-to-light press fit of the shaft is required. Since the allowable load, especially at a low speed, is very large, the shaft should be checked to assure adequate shaft strength.

The magnitude and direction of both the thrust and radial load must be taken into account when selecting a housing. **When pillow blocks are utilized, heavy loads should be directed through the base. Where uplift loads are involved, see Tables 6, 7 and 8 on pages B12-12 and B12-13 and for maximum values.** Where a load pulls the housing away from the mounting base, both the hold-down bolts and housing must be of adequate strength. Auxiliary load carrying devices such as shear bars are advisable for side or end loading of pillow blocks and radial loads for flange units.

Shaft Tolerances	
Shaft Size	S-2000
UP TO 1-1/2"	+.0000 -.0005"
1-9/16 TO 4"	+.000 -.001"
4-7/16 TO 5"	+.000 -.0015"

BEARING SUPPORTING RADIAL LOADS ONLY

1. Define L_{10} Life Hours desired.
2. Establish bearing radial load, F_R

   (F_R = P for Pure Radial Load Conditions). The DODGE program BEST™★ can be used to find application loads.
3. Establish RPM.

Using the easy selection Table 4 on page B12-10, find, under the RPM column, the equivalent radial load that equals or is slightly higher than the application radial load for the desired life. The shaft size on the far left will be the minimum shaft size that you can use for your application.
If the desired life is different than the values shown on the chart, use alternate Method A shown below.

Example: 1. L_{10} Life = 30,000 Hours
2. Radial load = 4000 lbs.
3. RPM = 1,020

At the intersection of the 1,020 RPM column and the 30,000 hours L_{10} life row, the equivalent radial load of 4092 lbs. exceeds the 4000 lbs. radial load for shaft size 2-7/16". A bearing with bore 2-7/16", or larger, may be used for this application.

★ The DODGE Bearing Evaluation and Selection Technique (BEST) is a menu driven computer program that calculates bearing loads, fatigue life and operating temperature for a two bearing shaft system based on user supplied input parameters. This interactive program is available at www.ptwizard.com under the Product Selection area.

FEATURES/BENEFITS PAGE B12-2	SPECIFICATION PAGE B12-4	HOW TO ORDER/NOMENCLATURE PAGE B12-5	DIMENSIONS PAGE B12-14

SELECTION



ALTERNATE METHOD A - SELECTING A BEARING FOR AN L_{10} LIFE VALUE NOT SHOWN IN THE EASY SELECTION CHART.

The L_{10} life equation can be rearranged so that the bearing dynamic capacity **C** is identified in terms of L_{10}, RPM and P

$$C = \left(\frac{L_{10} \times RPM}{16667} \right)^{0.3} \times P$$

(P = F_R for Pure Radial Load Conditions)

Since the L_{10}, RPM and P are known, solve for C. Select from the dynamic capacity column on Table 1 on page B12-9 the **C** value equal to or greater than the **C** value just calculated. The bore size on the far left represents the proper bore size selection. Check that the application RPM does not exceed the MAX. RPM on Table 1. Also check that the radial load does not exceed the Maximum Allowable Slip Fit Radial Load shown on Table 1 on page B12-9. If it does, a line-to-line to light press fit of shaft is required. When selecting an L_{10} life of less than 30,000 hours, particular attention must be paid to shaft deflection and proper lubricant selection.

SELECTING BEARINGS SUPPORTING COMBINATION RADIAL AND THRUST LOADS

When a bearing supports both a radial load and a thrust load, the loading on the two rows is shared unequally depending on the ratio of thrust to radial load. The use of the X (radial factor) and Y (thrust factor) from Table 1 converts the applied thrust load and radial loads to an equivalent radial load having the same effect on the life of the bearing as a radial load of this magnitude.

The equivalent radial load $P = XF_R + YF_A$

Where:

P = Equivalent radial load, lbs.

F_R = Radial load, lbs. (see Table 1 for allowable slip fit maximum load)

F_A = Thrust (axial) load, lbs.

e = Thrust load to radial load factor (Table 1)

X = Radial load factor (Table 1)

Y = Thrust load factor (Table 1)

To find X and Y, calculate F_A/F_R and compare to **e** for the selected bore size. Determine X and Y from Table 1 on page B12-9 depending on whether F_A/F_R is equal to or less than **e**, or F_A/F_R is greater than **e**. Substitute all known values into the equivalent radial load equation. P (equivalent radial load) can be used in the life formula to determine L_{10}, or it can be compared to the allowable equivalent radial load ratings for the speed and hours life desired in the easy selection Table 4 on page B12-10.

SELECTING BEARINGS SUPPORTING ONLY THRUST LOADS

Spherical Roller Bearings generally are not recommended for pure thrust load applications. However, they will perform satisfactorily under very light pure thrust loads. Consult DODGE Application Engineering (864-284-5700).

SELECTING LUBRICATION

DODGE S2000 spherical roller bearings are lubricated at the factory with Mobilgrease XHP 222 grease. Mobilgrease XHP 222 grease is a superior industrial grease using a lithium complex thickener and highly refined base oil. This grease will adequately handle low and medium speeds with low and medium loads at normal temperatures as defined on Table 5 on page B12-11. For very low and high speeds, for heavy loads and for low and high temperatures, special greases must be used. Contact DODGE Application Engineering (864-284-5700). DODGE engineers will recommend bearings and lubricants for the above unusual conditions. DODGE also has the expertise to custom design and build special bearings for your needs. The only maintenance requirement for DODGE Unitized roller bearings is periodic relubrication at regular intervals as outlined in the appropriate instruction manuals.

MISALIGNMENT CONSIDERATIONS

In nearly all applications, good design practice requires two bearings supporting the shaft. In cases where three or more bearings are installed, unless precautions are taken to line the bearings up both vertically and horizontally, it is possible to induce heavy loads. In the case of two bearings, alignment is not as critical, especially with DODGE Unitized Spherical Roller Bearings. S2000 bearings are designed to allow a maximum of ±1° of static and dynamic misalignment. To ensure good alignment, mounting surfaces must be checked for flatness and must lie in the same plane. When tightening base bolts, each bolt should be alternately tightened in incremental torque values until full torque is achieved to prevent the angular shifting of the pillow block that occurs when one bolt is tightened to its full torque. Shimming may be required to minimize misalignment.



S-2000

Table 1: S2000-HD Spherical Roller Bearings

Shaft Size Inches	Basic Bearing Description	e	F_A/F_R< e		F_A/F_R>e		Max. Allowable Slip Fit Radial Load F_R* lbs.	Dynamic Capacity (C) lbs.	Static Capacity Co lbs.	Maximum Speed **	
			X	Y	X	Y				Labyrinth RPM	TRIDENT Triple Lip RPM
1-3/8 1-7/16 1-1/2	22208	0.28	1.0	2.4	0.67	3.6	3,750	20,800	21,000	3,600	2,900
1-11/16 1-3/4	22209	0.26	1.0	2.6	0.67	3.9	3,750	20,800	22,000	3,360	2,460
1-15/16 2	22210	0.24	1.0	2.8	0.67	4.2	4,000	22,000	24,000	3,180	2,200
2-3/16	22211	0.23	1.0	2.9	0.67	4.3	4,860	27,000	29,000	2,700	1,950
2-7/16	22213	0.24	1.0	2.8	0.67	4.2	6,840	39,000	47,500	2,250	1,740
2-11/16 2-15/16 3	22215	0.22	1.0	3.1	0.67	4.6	7,500	41,500	53,000	2,040	1,490
3-7/16	22218	0.23	1.0	2.9	0.67	4.3	11,500	65,500	81,500	1,560	1,280
3-15/16	22220	0.24	1.0	2.8	0.67	4.2	14,400	83,000	104,000	1,320	1,075
4-7/16	22222	0.25	1.0	2.7	0.67	4.1	18,400	104,000	132,000	1,200	990
4-15/16	22226	0.26	1.0	2.6	0.67	3.9	25,700	146,000	196,000	1,020	870

* If load exceeds the maximum allowable slip fit load, line- to-line to light press fit of shaft required. Maximum slip fit radial loads apply if recommended shaft sizes are used.

** Maximum speed is dependent on load and ambient conditions, consult DODGE Engineering.

After final alignment of the shaft and installation of the housings, tighten both setscrews hand tight, then the setscrews should be tightened alternately and in small increments to the torque specified in Table 2. After 24 hours operation, the setscrews should be retightened to the torque in Table 2 to assure full locking of the inner race to the shaft. Care should be taken that the socket key or driver is in good condition with no rounded corners and the key is fully engaged in the setscrew and held square with the setscrew to prevent rounding out of the setscrew socket when applying maximum torque.

Table 2: Set Screw Torque Values

Set Screw Torque Table		
Shaft Size	Socket Set Screw Size	Tightening Torque
1-3/8 - 1-3/4 in.	5/16 in.	165 Inch Pounds
1-15/16 - 2-7/16 in.	3/8 in.	290 Inch Pounds
2-11/16 - 3-7/16 in.	1/2 in.	620 Inch Pounds
3-15/16 - 4-15/16 in.	5/8 in.	1325 Inch Pounds

Table 3: Lubrication Intervals

Lubrication Guide (In Weeks)								
Read Preceding Paragraphs Before Establishing Lubrication Schedule								
Hours Run per Day	1 to 250 RPM	251 to 500 RPM	501 to 750 RPM	751 to 1000 RPM	1001 to 1500 RPM	1501 to 2000 RPM	2001 to 2500 RPM	2501 to 3000 RPM
8	12	12	10	7	5	4	3	2
16	12	7	5	4	2	2	2	1
24	10	5	3	2	1	1	1	1

SELECTION

DODGE



S-2000

Table 4: Easy Selection Table for S-2000 Double Row Spherical Roller Bearings

Shaft Size Inches	L_{10} Life Hours	Allowable Equivalent Radial Load Rating (lbs.) at Various Revolutions per Minute																
		50	100	150	250	500	870	1,020	1,200	1,320	1,560	1,750	2,040	2,250	2,700	3180	3360	3600
1-3/8 to 1-1/2	10,000	7,498	6,090	5,393	4,626	3,758	3,182	3,034	2,890	2,808	2,671	2,581	2,465	2,393	1,495	2,157	2,122	2,078
	30,000	5,393	4,380	3,878	3,327	2,703	2,289	2,182	2,078	2,020	1,921	1,856	1,773	1,721	1,495	1,552	1,526	1,495
	40,000	4,947	4,018	3,558	3,052	2,479	2,100	2,002	1,907	1,853	1,762	1,703	1,626	1,579	1,495	1,423	1,400	1,371
	60,000	4,380	3,558	3,150	2,703	2,195	1,859	1,773	1,688	1,641	1,560	1,508	1,440	1,398	1,324	1,260	1,240	1,214
	100,000	3,758	3,052	2,703	2,319	1,883	1,595	1,521	1,448	1,407	1,339	1,293	1,235	1,199	1,136	1,081	1,063	1,042
1-11/16 to 1-3/4	10,000	7,498	6,090	5,393	4,626	3,758	3,182	3,034	2,890	2,808	2,671	2,581	2,465	1,579	2,266	2,157	2,122	
	30,000	5,393	4,380	3,878	3,327	2,703	2,289	2,182	2,078	2,020	1,921	1,856	1,773	1,579	1,630	1,552	1,526	
	40,000	4,947	4,018	3,558	3,052	2,479	2,100	2,002	1,907	1,853	1,762	1,703	1,626	1,579	1,495	1,423	1,400	
	60,000	4,380	3,558	3,150	2,703	2,195	1,859	1,773	1,688	1,641	1,560	1,508	1,440	1,398	1,324	1,260	1,240	
	100,000	3,758	3,052	2,703	2,319	1,883	1,595	1,521	1,448	1,407	1,339	1,293	1,235	1,199	1,136	1,081	1,063	
1-15/16 to 2	10,000	7,930	6,441	5,704	4,893	3,975	3,366	3,209	3,057	2,970	2,825	2,729	1,720	2,531	2,396	2,282		
	30,000	5,704	4,633	4,102	3,519	2,859	2,421	2,308	2,198	2,136	2,032	1,963	1,720	1,820	1,724	1,641		
	40,000	5,232	4,250	3,763	3,228	2,622	2,221	2,117	2,017	1,960	1,864	1,801	1,720	1,670	1,581	1,505		
	60,000	4,633	3,763	3,332	2,859	2,322	1,966	1,875	1,786	1,735	1,650	1,594	1,523	1,479	1,400	1,333		
	100,000	3,975	3,228	2,859	2,452	1,992	1,687	1,608	1,532	1,489	1,416	1,368	1,306	1,269	1,201	1,144		
2-3/16	10,000	9,733	7,905	7,000	6,005	4,878	4,131	3,939	3,751	3,645	3,467	2,210	3,199	3,106	2,941			
	30,000	7,000	5,686	5,035	4,319	3,508	2,971	2,833	2,698	2,622	2,494	2,210	2,301	2,234	2,115			
	40,000	6,421	5,216	4,618	3,962	3,218	2,726	2,599	2,475	2,405	2,288	2,210	2,111	2,050	1,940			
	60,000	5,686	4,618	4,089	3,508	2,850	2,413	2,301	2,191	2,130	2,026	1,957	1,869	1,815	1,718			
	100,000	4,878	3,962	3,508	3,010	2,445	2,070	1,974	1,880	1,827	1,738	1,679	1,603	1,557	1,474			
2-7/16	10,000	14,058	11,419	10,111	8,674	7,046	5,967	5,689	5,418	5,266	5,008	4,838	4,621	4,487				
	30,000	10,111	8,213	7,272	6,239	5,068	4,292	4,092	3,897	3,787	3,602	3,480	3,324	3,227				
	40,000	9,275	7,534	6,671	5,723	4,649	3,937	3,753	3,575	3,474	3,304	3,192	3,049	2,960				
	60,000	8,213	6,671	5,907	5,068	4,116	3,486	3,324	3,165	3,076	2,926	2,827	2,700	2,621				
	100,000	7,046	5,723	5,068	4,348	3,531	2,991	2,851	2,716	2,639	2,510	2,425	2,316	2,249				
2-11/16 to 3	10,000	14,959	12,151	10,759	9,230	7,497	6,350	6,054	5,766	3,697	5,329	5,149	4,917					
	30,000	10,759	8,739	7,738	6,639	5,392	4,567	4,354	4,147	3,697	3,833	3,703	3,537					
	40,000	9,870	8,017	7,098	6,090	4,946	4,189	3,994	3,804	3,697	3,516	3,397	3,244					
	60,000	8,739	7,098	6,285	5,392	4,380	3,709	3,537	3,368	3,273	3,113	3,008	2,873					
	100,000	7,497	6,090	5,392	4,626	3,758	3,182	3,034	2,890	2,808	2,671	2,580	2,464					
3-7/16	10,000	23,611	19,178	16,981	14,569	11,833	10,022	9,555	6,004	8,844	8,411							
	30,000	16,981	13,793	12,213	10,478	8,511	7,208	6,872	6,004	6,360	6,050							
	40,000	15,577	12,653	11,203	9,612	7,807	6,612	6,304	6,004	5,835	5,549							
	60,000	13,793	11,203	9,920	8,511	6,913	5,855	5,582	5,316	5,166	4,914							
	100,000	11,833	9,612	8,511	7,302	5,931	5,023	4,789	4,561	4,432	4,216							

Only the labyrinth seal (L seal) may be used to the right of the heavy line.

In the light shaded area, a line-to-line to light press fit on the shaft is required.

For applications in the dark shaded area, the maximum load for the specific speed is shown. The load does not correspond to the 10 shown at the left.



S-2000

Table 4: Easy Selection Table for S-2000 Double Row Spherical Roller Bearings (continued)

Shaft Size Inches	L_{10} Life Hours	Allowable Equivalent Radial Load Rating (Lbs.) At Various Revolutions Per Minute																
		50	100	150	250	500	870	1,020	1,200	1,320	1,560	1,750	2,040	2,250	2,700	3180	3360	3600
3-15/16	10,000	29,919	24,302	21,518	18,461	14,995	12,699	7,988	11,531	11,206								
	30,000	21,518	17,478	15,476	13,278	10,785	9,134	7,988	8,294	8,060								
	40,000	19,739	16,033	14,197	12,180	9,893	8,378	7,988	7,608	7,393								
	60,000	17,478	14,197	12,571	10,785	8,760	7,419	7,073	6,737	6,547								
	100,000	14,995	12,180	10,785	9,252	7,515	6,365	6,068	5,779	5,616								
4-7/16	10,000	37,489	30,450	26,963	23,132	18,789	10,498	15,171	14,449									
	30,000	26,963	21,901	19,392	16,637	13,513	10,498	10,911	10,392									
	40,000	24,733	20,090	17,789	15,261	12,396	10,498	10,009	9,533									
	60,000	21,901	17,789	15,751	13,513	10,976	9,296	8,863	8,441									
	100,000	18,789	15,261	13,513	11,593	9,417	7,975	7,603	7,242									
4-15/16	10,000	52,628	42,747	37,851	32,473	26,377	14,738	21,298										
	30,000	37,851	30,745	27,224	23,356	18,971	14,738	15,318										
	40,000	34,722	28,203	24,973	21,424	17,402	14,738	14,051										
	60,000	30,745	24,973	22,112	18,971	15,409	13,050	12,442										
	100,000	26,377	21,424	18,971	16,275	13,220	11,196	10,674										

Only the labyrinth seal (L seal) may be used to the right of the heavy line.

In the light shaded area, a line-to-line to light press fit on the shaft is required.

For applications in the dark shaded area, the maximum load for the specific speed is shown. The load does not correspond to the L_{10} shown at the left.

Table 5: Definition Of Operating Conditions For Unitized Spherical Roller Bearings

LOW SPEED	UP TO 20% OF MAX. RPM (TABLE 1)
MEDIUM SPEED	OVER 20% TO 80% OF MAX. RPM
HIGH SPEED	MOVER 80% OF MAX. RPM
LIGHT LOAD	UP TO 8% OF C (TABLE 1)
NORMAL LOAD	OVER 8% TO 18% OF **C**
HEAVY LOAD	OVER 18% OF **C**
	C= DYNAMIC CAPACITY
LOW TEMPERATURE	-20 TO -100°F
MEDIUM TEMPERATURE	OVER 20°F TO 200°F
HIGH TEMPERATURE	OVER 200°F TO 250°F

SELECTION

S-2000

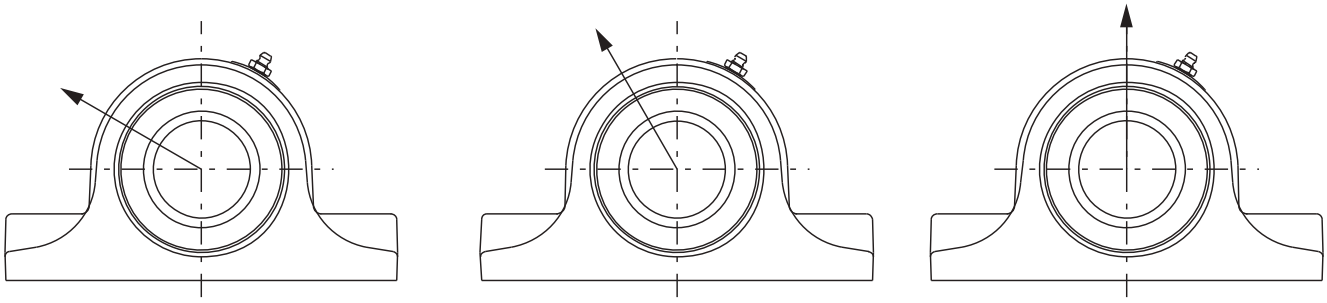

Table 6: S-2000 Housing Rating, 2-Bolt, Cast Iron*

Bore Size	Maximum Recommended Housing Cap Loads, lb		
	120°	150°	180°
1-3/8 to 1-1/2	2110	2640	3100
1-5/8 to 1-3/4	2380	2980	3500
1-15/16 to 2	3130	3910	4600
2-3/16	3330	4160	4900
2-7/16	3330	4160	4900
2-11/16 to 3	4420	5520	6500
3-3/16 to 3-7/16	4620	5780	6800
3-15/16	7500	9350	11000

Table 7: S-2000 Housing Rating, 4-Bolt, Cast Iron*

Bore Size	Maximum Recommended Housing Cap Loads, lb		
	120°	150°	180°
1-15/16 - 2	3200	4000	4700
2-3/16	3300	4100	4800
2-7/16	3810	4760	5600
2-11/16 to 3	4620	5780	6800
3-7/16	4700	5870	6900
3-15/16	7500	9350	11000
4-7/16	9900	12330	14500
4-15/16	13400	16750	19700

* When utilizing heavy cap loads on pillow block housings, the installation must adhere to the following procedures:

1. The pillow block base bolts must be of high strength (Grade 8) bolts and properly tightened to mounting structure.
2. Stop bars (shear strips) should be used against the plummer block where side loads are encountered.
3. In all cases where loads are heavy, the L_{10} life of the bearing should be checked for proper selection and life requirements.



S2000-HD

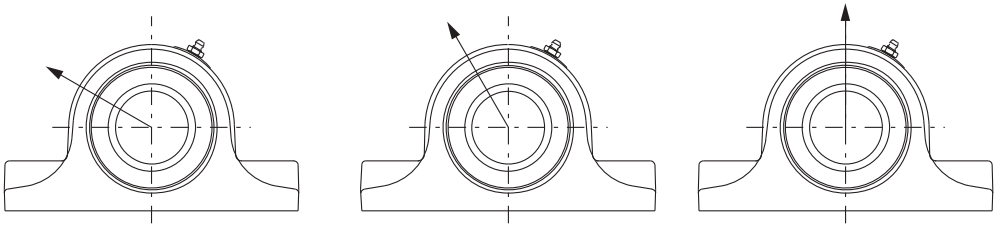

Table 8: Steel Housed S2000 - Housing Ratings*

Shaft Sizes	Basic Bearing Description	Maximum Recommended Housing Loads, lb	
		P2B	P4B
1-3/8 1-7/16 1-1/2	22208	24400	
1-11/16 1-3/4	22209	26400	
1-15/16 2	22210	30200	
2-3/16	22211	35400	
2-7/16	22213	51300	52800
2-11/16 2-15/16 3	22215	59700	60000
3-7/16	22218	90700	95500
3-15/16	22220		115000
4-7/16	22222		152100
4-15/16	22226		188200

* It is important to note that the values listed above are housing fracture loads from variou applied directions. These loads may exceed bearing, mounting bolt and/or shaft capacities. Applications subject to heavy housing loads, particularly shock loads, must adhere to the following procedures:

(1) The pillow block base bolts must be of high strength (Grade 8) bolts and properly tightened to mounting structure.

(2) Stop bars (shear strips) should be used against the plummer block where side loads are encountered.

(3) In all cases where loads are heavy, the L_{10} life of the bearing should be checked for proper selection and life requirements.,

DIMENSIONS

S-2000 Pillow Block
2-BOLT BASE - INCH

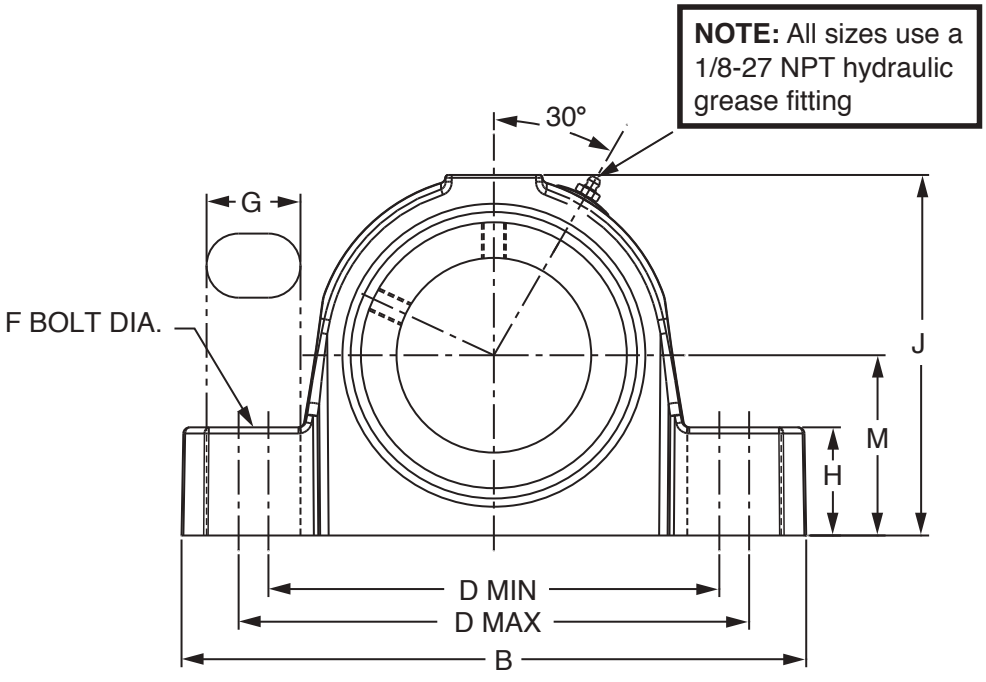

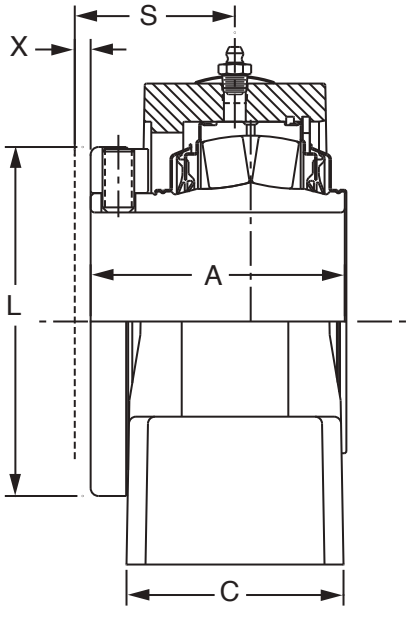

EXPANSION

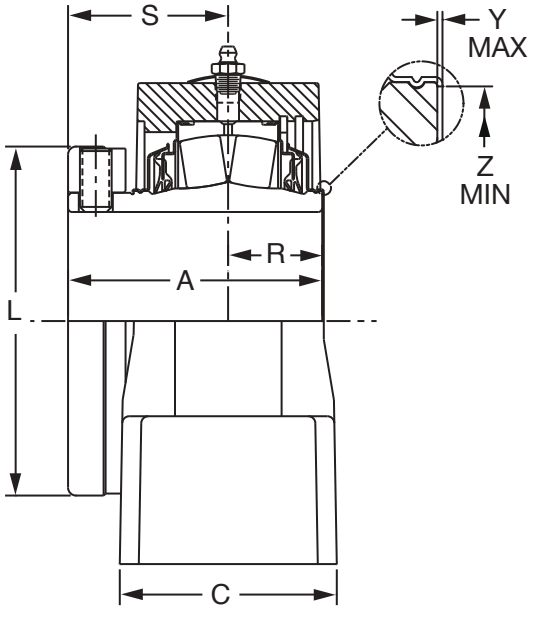

NON-EXPANSION

FEATURES/BENEFITS PAGE B12-2	SPECIFICATION PAGE B12-4	HOW TO ORDER/NOMENCLATURE PAGE B12-4	SELECTIONS PAGE B12-7

DIMENSIONS



S-2000 Pillow Block
2-BOLT BASE - INCH

Bearing	Shaft Size Inch	TRIDENT Seal				Labyrinth Seal			
		Non-Expansion		Expansion		Non-Expansion		Expansion	
		Part No.	Part Name	Part No.	Part Name	Part No.	Part Name	Part No.	Part Name
22208	1-3/8	**070272**	P2B-S2-106R	**070295**	P2B-S2-106RE	**070318**	P2B-S2-106L	**070341**	P2B-S2-106LE
	1-7/16	**070273**	P2B-S2-107R	**070296**	P2B-S2-107RE	**070319**	P2B-S2-107L	**070342**	P2B-S2-107LE
	1-1/2	**070274**	P2B-S2-108R	**070297**	P2B-S2-108RE	**070320**	P2B-S2-108L	**070343**	P2B-S2-108LE
22209	1-11/16	**070276**	P2B-S2-111R	**070299**	P2B-S2-111RE	**070322**	P2B-S2-111L	**070345**	P2B-S2-111LE
	1-3/4	**070277**	P2B-S2-112R	**070300**	P2B-S2-112RE	**070323**	P2B-S2-112L	**070346**	P2B-S2-112LE
22210	1-15/16	**070278**	P2B-S2-115R	**070301**	P2B-S2-115RE	**070324**	P2B-S2-115L	**070347**	P2B-S2-115LE
	2	**070279**	P2B-S2-200R	**070302**	P2B-S2-200RE	**070325**	P2B-S2-200L	**070348**	P2B-S2-200LE
22211	2-3/16	**070280**	P2B-S2-203R	**070303**	P2B-S2-203RE	**070326**	P2B-S2-203L	**070349**	P2B-S2-203LE
22213	2-7/16	**070282**	P2B-S2-207R	**070305**	P2B-S2-207RE	**070328**	P2B-S2-207L	**070351**	P2B-S2-207LE
22215	2-11/16	**070284**	P2B-S2-211R	**070307**	P2B-S2-211RE	**070330**	P2B-S2-211L	**070353**	P2B-S2-211LE
	2-15/16	**070285**	P2B-S2-215R	**070308**	P2B-S2-215RE	**070331**	P2B-S2-215L	**070354**	P2B-S2-215LE
	3	**070286**	P2B-S2-300R	**070309**	P2B-S2-300RE	**070332**	P2B-S2-300L	**070355**	P2B-S2-300LE
22218	3-7/16	**070288**	P2B-S2-307R	**070311**	P2B-S2-307RE	**070334**	P2B-S2-307L	**070357**	P2B-S2-307LE
22220	3-15/16	**070290**	P2B-S2-315R	**070313**	P2B-S2-315RE	**070336**	P2B-S2-315L	**070359**	P2B-S2-315LE

Shaft Size	A	B	C	D		F Bolt Dia.	G	H	J	L	M	R	S	X Total Exp.	Y	Z
				Min	Max											
1-3/8 1-7/16 1-1/2	2.53	6.88	1.95	4.81	5.20	1/2	0.81	1.13	3.88	2.75	1.88	0.88	1.66	3/16	0.020	1.80
1-11/16 1-3/4	2.67	7.38	2.06	5.31	5.70	1/2	0.81	1.25	4.27	3.19	2.13	0.81	1.86	1/4	0.020	2.08
1-15/16 2	2.84	8.38	2.50	6.06	6.44	5/8	0.95	1.31	4.56	3.44	2.25	0.86	1.98	1/4	0.020	2.30
2-3/16	2.94	8.88	2.63	6.56	6.94	5/8	0.95	1.50	5.00	3.75	2.50	0.91	2.03	1/4	0.025	2.60
2-7/16	3.20	9.25	2.81	6.94	7.31	5/8	0.95	1.63	5.59	4.06	2.75	1.13	2.08	1/4	0.025	2.95
2-11/16 2-15/16 3	3.59	10.44	3.08	7.94	8.31	3/4	1.06	1.88	6.38	4.70	3.25	1.14	2.45	1/4	0.025	3.47
3-7/16	4.02	13.00	3.42	9.38	10.63	7/8	1.63	2.25	7.50	5.50	3.75	1.41	2.61	1/4	0.025	4.05
3-15/16	4.47	15.25	3.94	10.63	12.88	1	2.25	2.44	8.38	6.00	4.25	1.56	2.91	5/16	0.025	4.50

FEATURES/BENEFITS PAGE B12-2	SPECIFICATION PAGE B12-4	HOW TO ORDER/NOMENCLATURE PAGE B12-4	SELECTIONS PAGE B12-7

DIMENSIONS

S-2000 Pillow Block with Type E Dimensions
2-BOLT

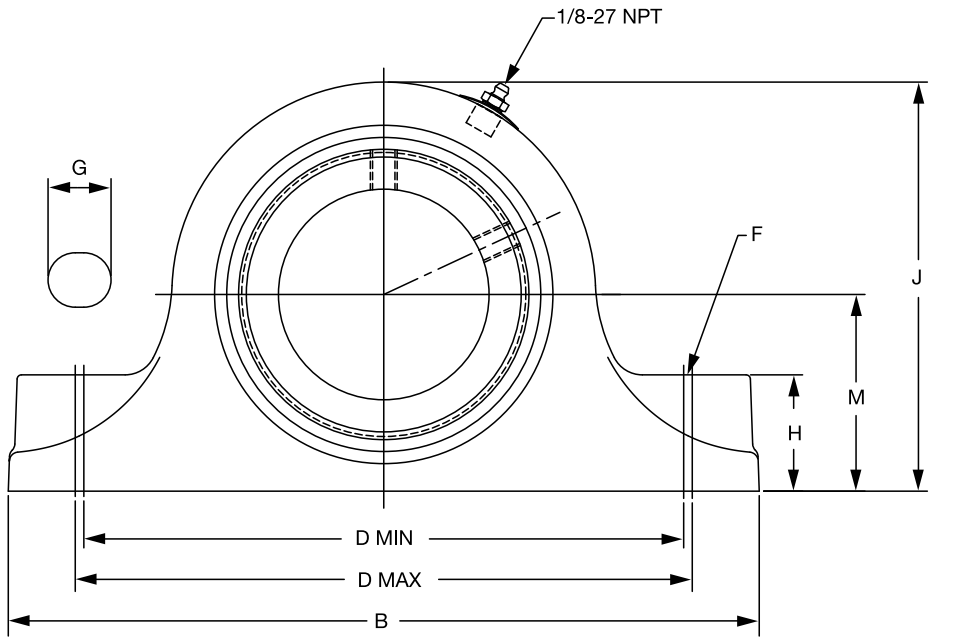

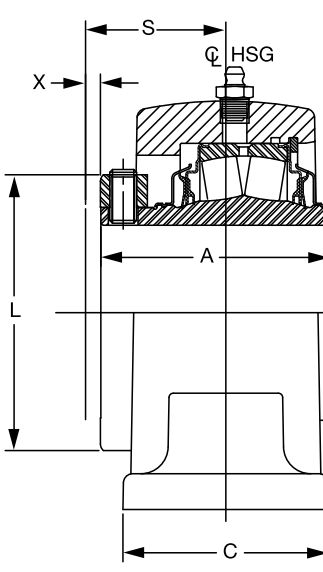

EXPANSION

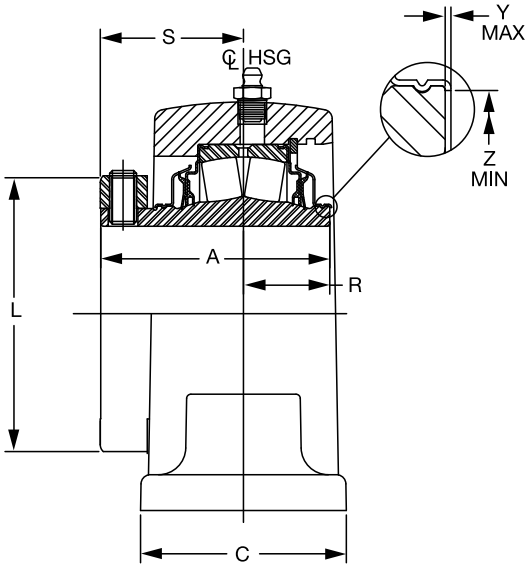

NON-EXPANSION



S-2000 Pillow Block with Type E Dimensions
2-BOLT

Bearing Series	Shaft Size*	TRIDENT Seal				Labyrinth Seal			
		Non Expansion		Expansion		Non Expansion		Expansion	
		Part No.	Part Name	Part No.	Part Name	Part No.	Part Name	Part No.	Part Name
22208	1-3/8	**071389**	EP2B-S2-106R	**071400**	EP2B-S2-106RE	**071411**	EP2B-S2-106L	**071422**	EP2B-S2-106LE
	1-7/16	**071390**	EP2B-S2-107R	**071401**	EP2B-S2-107RE	**071412**	EP2B-S2-107L	**071423**	EP2B-S2-107LE
22209	1-11/16	**071391**	EP2B-S2-111R	**071402**	EP2B-S2-111RE	**071413**	EP2B-S2-111L	**071424**	EP2B-S2-111LE
22210	1-15/16	**071392**	EP2B-S2-115R	**071403**	EP2B-S2-115RE	**071414**	EP2B-S2-115L	**071425**	EP2B-S2-115LE
	2	**071393**	EP2B-S2-200R	**071404**	EP2B-S2-200RE	**071415**	EP2B-S2-200L	**071426**	EP2B-S2-200LE
22211	2-3/16	**071394**	EP2B-S2-203R	**071405**	EP2B-S2-203RE	**071416**	EP2B-S2-203L	**071427**	EP2B-S2-203LE
22213	2-7/16	**071395**	EP2B-S2-207R	**071406**	EP2B-S2-207RE	**071417**	EP2B-S2-207L	**071428**	EP2B-S2-207LE
22215	2-11/16	**071396**	EP2B-S2-211R	**071407**	EP2B-S2-211RE	**071418**	EP2B-S2-211L	**071429**	EP2B-S2-211LE
	2-15/16	**071397**	EP2B-S2-215R	**071408**	EP2B-S2-215RE	**071419**	EP2B-S2-215L	**071430**	EP2B-S2-215LE
	3	**071398**	EP2B-S2-300R	**071409**	EP2B-S2-300RE	**071420**	EP2B-S2-300L	**071431**	EP2B-S2-300LE
22218	3-7/16	**071399**	EP2B-S2-307R	**071410**	EP2B-S2-307RE	**071421**	EP2B-S2-307L	**071432**	EP2B-S2-307LE

*Consult Dodge For Sizes Not Listed

Shaft Size	A	B#	C#	D		F Bolt Dia.	G#	H#	J#	L	M	R	S	X Total Exp.	Y	Z	Set Screw Size	S/S Torque In/Lbs
				Min	Max													
1-3/8 1-7/16	2.53	7.37	2.12	5.63	5.88	1/2	0.75	1.13	3.85	2.55	1.88	1.03	1.50	5/32	0.020	1.80	5/16-18	165
1-11/16	2.67	7.88	2.38	6.13	6.38	1/2	0.75	1.25	4.25	3.01	2.13	0.98	1.69	3/16	0.020	2.08	5/16-18	165
1-15/16 2	2.84	8.87	2.49	6.88	7.12	5/8	0.88	1.31	4.47	3.44	2.25	1.08	1.76	7/32	0.020	2.30	3/8-16	290
2-3/16	2.94	9.62	2.56	7.63	7.88	5/8	0.88	1.50	5.00	3.50	2.50	1.06	1.88	1/4	0.025	2.60	3/8-16	290
2-7/16	3.20	10.50	2.87	8.38	8.62	5/8	0.88	1.63	5.71	4.06	2.75	1.20	2.00	1/4	0.025	2.95	3/8-16	290
2-11/16 2-15/16 3	3.59	12.00	2.99	9.31	9.69	3/4	1.07	1.88	6.32	4.61	3.13	1.34	2.25	1/4	0.025	3.47	1/2-13	620
3-7/16	4.01	14.00	3.49	10.81	11.19	7/8	1.19	2.25	7.69	5.50	3.75	1.51	2.50	1/4	0.025	4.05	1/2-13	620

Notes: "A" And "R" Dimensions Do Not Include "Y" Dimension

Reference Dimension Only

FEATURES/BENEFITS PAGE B12-2	SPECIFICATION PAGE B12-4	HOW TO ORDER/NOMENCLATURE PAGE B12-4	SELECTIONS PAGE B12-7

DIMENSIONS

Steel S-2000-HD Pillow Block 2-Bolt

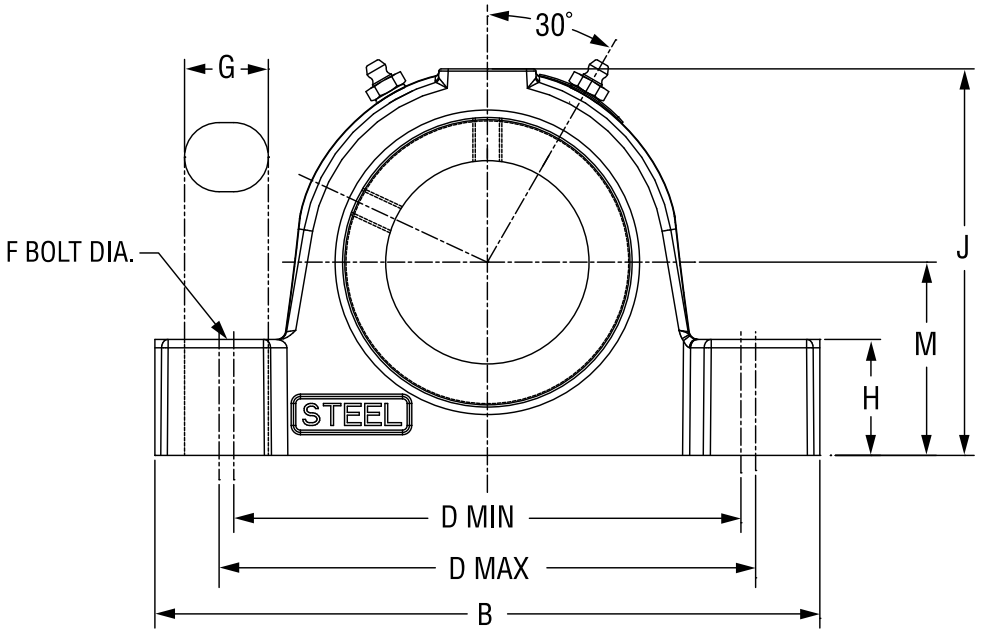

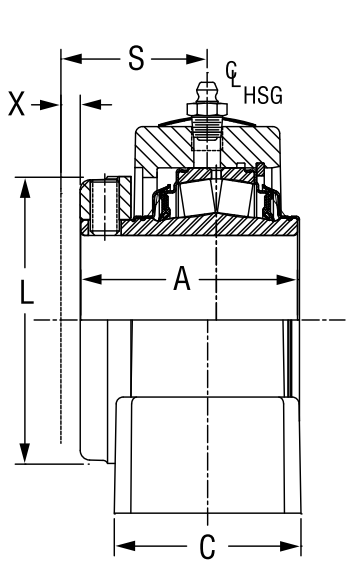

EXPANSION

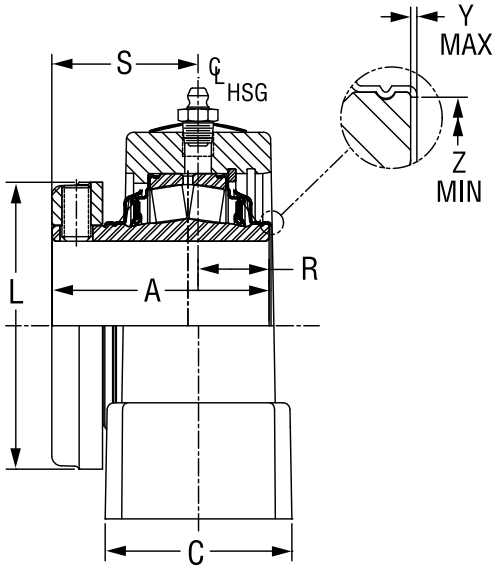

NON-EXPANSION

DODGE



Steel S-2000-HD Pillow Block 2-Bolt

Shaft Size	Dodge Non-Expansion		Dodge Expansion	
	Part No.	Description	Part No.	Description
1-3/8	**071790**	SP2B-S2-106R	**071804**	SP2B-S2-106RE
1-7/16	**071791**	SP2B-S2-107R	**071805**	SP2B-S2-107RE
1-1/2	**071792**	SP2B-S2-108R	**071806**	SP2B-S2-108RE
1-11/16	**071793**	SP2B-S2-111R	**071807**	SP2B-S2-111RE
1-3/4	**071794**	SP2B-S2-112R	**071808**	SP2B-S2-112RE
1-15/16	**071795**	SP2B-S2-115R	**071809**	SP2B-S2-115RE
2	**071796**	SP2B-S2-200R	**071810**	SP2B-S2-200RE
2-3/16	**071797**	SP2B-S2-203R	**071811**	SP2B-S2-203RE
2-7/16	**071798**	SP2B-S2-207R	**071812**	SP2B-S2-207RE
2-11/16	**071799**	SP2B-S2-211R	**071813**	SP2B-S2-211RE
2-15/16	**071800**	SP2B-S2-215R	**071814**	SP2B-S2-215RE
3	**071801**	SP2B-S2-300R	**071815**	SP2B-S2-300RE
3-7/16	**071802**	SP2B-S2-307R	**071816**	SP2B-S2-307RE
3-15/16	**071803**	SP2B-S2-315R	**071817**	SP2B-S2-315RE

Shaft Size	A	B	C	D		F Bolt Dia.	G	H	J	L	M	R	S	"X Total Exp"	Y	Z
				Min	Max											
1-3/8 1-7/16 1-1/2	2.53	6.88	2.25	4.69	6.00	1/2	1.28	1.13	3.88	2.75	1.88	0.86	1.67	3/16	0.020	1.80
1-11/16 1-3/4	2.67	7.13	2.37	5.25	5.75	1/2	0.88	1.25	4.27	3.19	2.13	0.91	1.76	1/4	0.020	2.08
1-15/16 2	2.84	8.38	2.44	5.93	6.36	5/8	0.97	1.31	4.56	3.44	2.25	0.89	1.95	1/4	0.020	2.30
2-3/16	2.94	8.88	2.50	6.50	7.00	5/8	1.04	1.50	5.00	3.75	2.50	0.99	1.95	1/4	0.025	2.59
2-7/16	3.00	9.25	2.90	6.81	7.43	5/8	1.07	1.63	5.60	4.06	2.75	1.17	2.03	1/4	0.025	2.94
2-11/16 2-15/16 3	3.59	10.44	2.91	7.70	8.40	3/4	1.23	1.88	6.38	4.70	3.25	1.11	2.48	1/4	0.025	3.47
3-7/16	4.02	13.00	3.41	9.25	10.75	7/8	1.75	2.25	7.50	5.50	3.75	1.43	2.61	1/4	0.025	4.05
3-15/16	4.47	14.25	3.89	10.04	12.6	1	2.40	2.44	8.37	6.00	4.25	1.59	2.91	5/16	0.025	4.50

"A" & "R" Dimensions Do Not Include "Y" Dimension

FEATURES/BENEFITS PAGE B12-2	SPECIFICATION PAGE B12-4	HOW TO ORDER/NOMENCLATURE PAGE B12-5	DIMENSIONS PAGE B12-14

SELECTION

Steel S-2000-HD Pillow Block 2-Bolt With Type E Dimensions

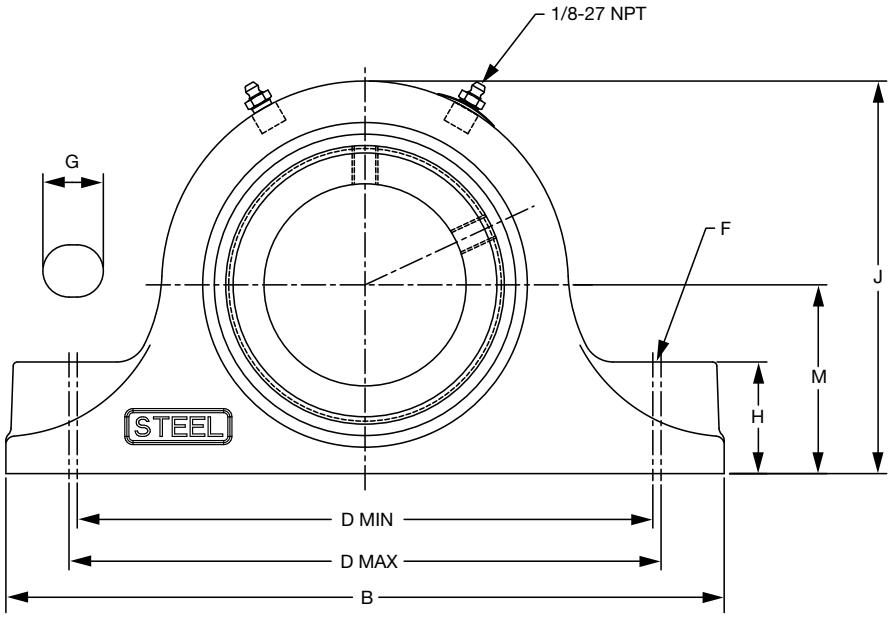

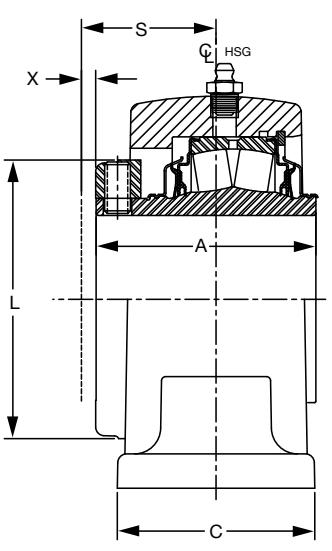

EXPANSION

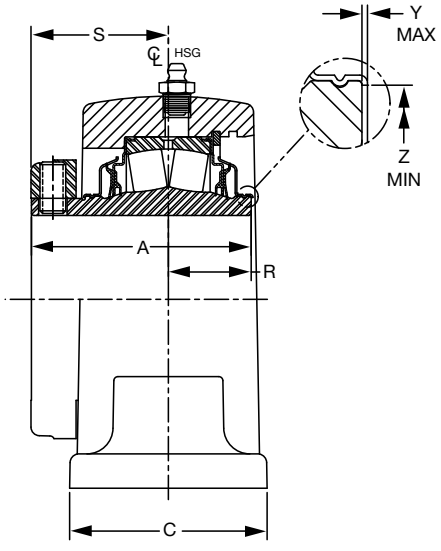

NON-EXPANSION

DIMENSIONS

Steel S-2000-HD Pillow Block 2-BOLT With Type E Dimensions

Shaft Size	Dodge Non-Expansion		Dodge Expansion	
	Part No.	Description	Part No.	Description
1-3/8	**071940**	SEP2B-S2-106R	**071951**	SEP2B-S2-106RE
1-7/16	**071941**	SEP2B-S2-107R	**071952**	SEP2B-S2-107RE
1-11/16	**071942**	SEP2B-S2-111R	**071953**	SEP2B-S2-111RE
1-15/16	**071943**	SEP2B-S2-115R	**071954**	SEP2B-S2-115RE
2	**071944**	SEP2B-S2-200R	**071955**	SEP2B-S2-200RE
2-3/16	**071945**	SEP2B-S2-203R	**071956**	SEP2B-S2-203RE
2-7/16	**071946**	SEP2B-S2-207R	**071957**	SEP2B-S2-207RE
2-11/16	**071947**	SEP2B-S2-211R	**071958**	SEP2B-S2-211RE
2-15/16	**071948**	SEP2B-S2-215R	**071959**	SEP2B-S2-215RE
3	**071949**	SEP2B-S2-300R	**071960**	SEP2B-S2-300RE
3-7/16	**071950**	SEP2B-S2-307R	**071961**	SEP2B-S2-307RE

Shaft Size	A	B	C	D		F Bolt Dia	G	H	J	L	M	R	S	X Total Exp	Y	Z	Set Screw Size	SS Torque In/lbs
				Min	Max													
1-3/8 1-7/16	2.53	6.88	2.25	4.69	5.88	1/2	1.22	1.13	3.84	2.55	1.88	1.03	1.50	5/32	0.020	1.80	5/16-18	165
1-11/16	2.67	7.88	2.38	5.70	6.50	1/2	1.02	1.25	4.26	3.01	2.13	0.98	1.69	3/16	0.020	2.08	5/16-18	165
1-15/16 2	2.84	8.88	2.44	6.00	7.12	5/8	1.32	1.31	4.47	3.26	2.25	1.08	1.76	7/32	0.020	2.30	3/8-16	290
2-3/16	2.94	9.63	2.50	6.50	7.88	5/8	1.45	1.50	5.00	3.50	2.50	1.06	1.88	1/4	0.025	2.60	3/8-16	290
2-7/16 2-11/16	3.20	10.25	2.90	6.88	8.62	5/8	1.63	1.63	5.71	3.86	2.75	1.20	2.00	1/4	0.025	2.95	3/8-16	290
2-15/16 3	3.59	11.63	2.91	7.88	9.62	3/4	1.75	1.88	6.32	4.61	3.13	1.34	2.25	1/4	0.025	3.47	1/2-13	620
3-7/16	4.01	13.50	3.41	9.38	11.25	7/8	1.94	2.25	7.69	5.50	3.75	1.51	2.50	1/4	0.025	4.05	1/2-13	620

"A" & "R" Dimensions Do Not Include "Y" Dimension

DIMENSIONS

S-2000 Pillow Block
4-BOLT BASE

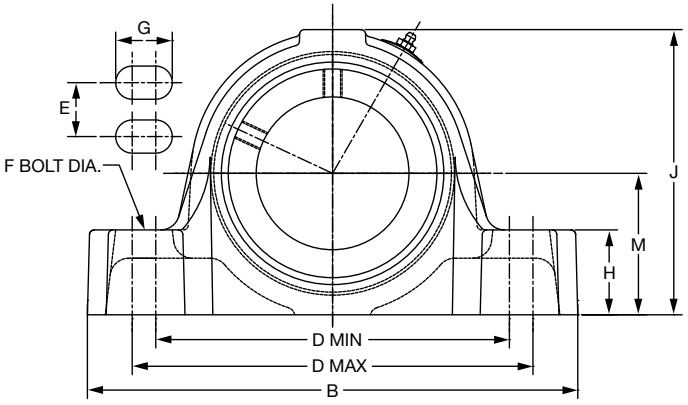

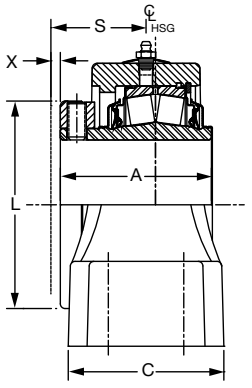

1-15/16 THRU 3-15/16" CONSTRUCTION

EXPANSION

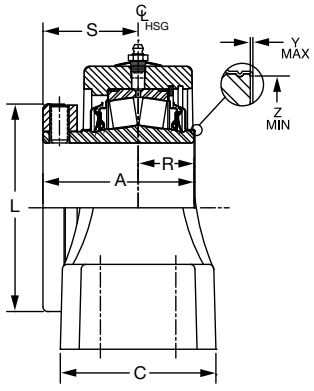

1-15/16 THRU 3-15/16" CONSTRUCTION

NON-EXPANSION

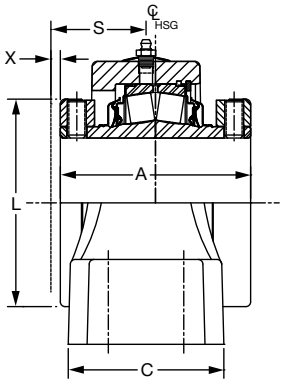

4-7/16 THRU 4-15/16" CONSTRUCTION

EXPANSION

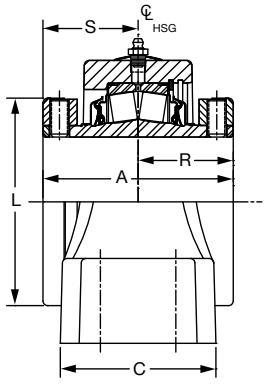

4-7/16 THRU 4-15/16" CONSTRUCTION

NON-EXPANSION

FEATURES/BENEFITS PAGE B12-2	SPECIFICATION PAGE B12-4	HOW TO ORDER/NOMENCLATURE PAGE B12-4	SELECTIONS PAGE B12-7

DIMENSIONS



S-2000 Pillow Block
4-BOLT BASE

Bearing	Shaft Size Inch	TRIDENT Seal				Labyrinth Seal			
		Non-Expansion		Expansion		Non-Expansion		Expansion	
		Part No.	Part Name	Part No.	Part Name	Part No.	Part Name	Part No.	Part Name
22210	1-15/16	**070361**	P4B-S2-115R	**070379**	P4B-S2-115RE	**070397**	P4B-S2-115L	**070415**	P4B-S2-115LE
	2	**070362**	P4B-S2-200R	**070380**	P4B-S2-200RE	**070398**	P4B-S2-200L	**070416**	P4B-S2-200LE
22211	2-3/16	**070363**	P4B-S2-203R	**070381**	P4B-S2-203RE	**070399**	P4B-S2-203L	**070417**	P4B-S2-203LE
22213	2-7/16	**070365**	P4B-S2-207R	**070383**	P4B-S2-207RE	**070401**	P4B-S2-207L	**070419**	P4B-S2-207LE
22215	2-11/16	**070367**	P4B-S2-211R	**070385**	P4B-S2-211RE	**070403**	P4B-S2-211L	**070421**	P4B-S2-211LE
	2-15/16	**070368**	P4B-S2-215R	**070386**	P4B-S2-215RE	**070404**	P4B-S2-215L	**070422**	P4B-S2-215LE
	3	**070369**	P4B-S2-300R	**070387**	P4B-S2-300RE	**070405**	P4B-S2-300L	**070423**	P4B-S2-300LE
22218	3-7/16	**070371**	P4B-S2-307R	**070389**	P4B-S2-307RE	**070407**	P4B-S2-307L	**070425**	P4B-S2-307LE
22220	3-15/16	**070373**	P4B-S2-315R	**070391**	P4B-S2-315RE	**070409**	P4B-S2-315L	**070427**	P4B-S2-315LE
22222	4-7/16	**070375**	P4B-S2-407R	**070393**	P4B-S2-407RE	**070411**	P4B-S2-407L	**070429**	P4B-S2-407LE
22226	4-15/16	**070377**	P4B-S2-415R	**070395**	P4B-S2-415RE	**070413**	P4B-S2-415L	**070431**	P4B-S2-415LE

Shaft Size	A	B	C	D		E	F Bolt Dia.	G	H	J	L	M	R	S	X Total Exp.	Y	Z
				Min	Max												
1-15/16 2	2.84	8.00	3.19	6.06	6.44	1.59	1/2	0.81	1.31	4.56	3.44	2.25	.84	2.0	1/4	0.020	2.30
2-3/16	2.94	8.88	3.25	6.56	6.94	1.69	1/2	0.81	1.50	5.00	3.75	2.50	0.91	2.03	1/4	0.025	2.60
2-7/16	3.20	9.25	3.38	6.94	7.31	1.75	1/2	0.81	1.63	5.59	4.06	2.75	1.08	2.13	1/4	0.025	2.95
2-11/16 2-15/16 3	3.59	10.44	3.75	7.94	8.31	1.88	5/8	0.94	1.88	6.44	4.70	3.25	1.09	2.50	1/4	0.025	3.47
3-7/16	4.02	13.00	4.13	9.38	10.63	2.00	3/4	1.50	2.25	7.56	5.50	3.75	1.44	2.58	1/4	0.025	4.05
3-15/16	4.47	15.25	4.50	12.13	12.88	2.25	3/4	1.25	2.44	8.44	6.00	4.25	1.64	2.83	5/16	0.025	4.50
4-7/16	6.53	16.50	4.75	13.00	14.00	2.50	3/4	1.38	2.75	9.63	6.45	4.75	3.08	3.45	3/8	N/A	N/A
4-15/16	6.91	18.63	5.38	15.00	16.00	2.75	7/8	1.50	3.00	11.13	7.45	5.50	3.27	3.64	3/8	N/A	N/A

DIMENSIONS

S-2000 Pillow Block with Type E Dimensions
4-BOLT

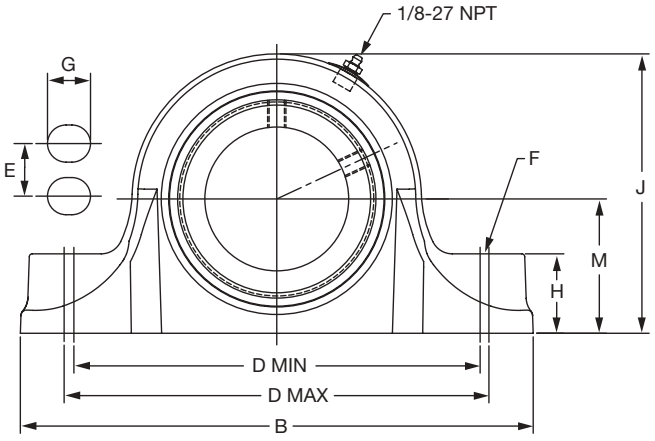

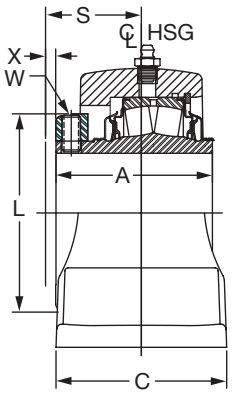

2-7/16 THRU 3-15/16" CONSTRUCTION

EXPANSION

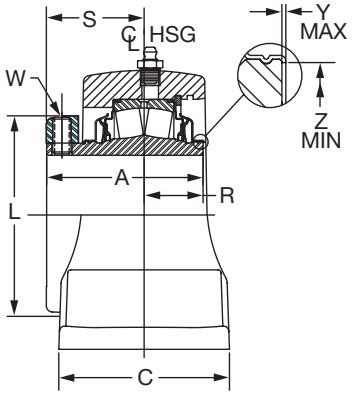

2-7/16 THRU 3-15/16" CONSTRUCTION

NON-EXPANSION

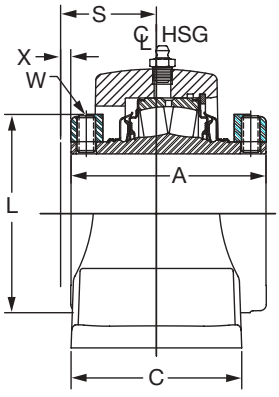

4-7/16 THRU 4-15/16" CONSTRUCTION

EXPANSION

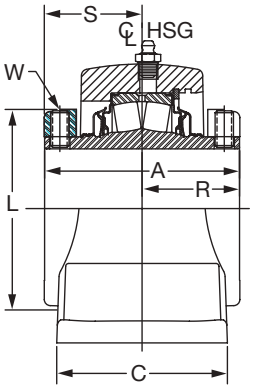

4-7/16 THRU 4-15/16" CONSTRUCTION

NON-EXPANSION



S-2000 Pillow Block with Type E Dimensions
4-BOLT

Bearing Series	Shaft Size*	TRIDENT Seal				Labyrinth Seal			
		Non Expansion		Expansion		Non Expansion		Expansion	
		Part No.	Part Name	Part No.	Part Name	Part No.	Part Name	Part No.	Part Name
22213	2-7/16	**071433**	EP4B-S2-207R	**071441**	EP4B-S2-207RE	**071449**	EP4B-S2-207L	**071457**	EP4B-S2-207LE
22215	2-11/16	**071434**	EP4B-S2-211R	**071442**	EP4B-S2-211RE	**071450**	EP4B-S2-211L	**071458**	EP4B-S2-211LE
	2-15/16	**071435**	EP4B-S2-215R	**071443**	EP4B-S2-215RE	**071451**	EP4B-S2-215L	**071459**	EP4B-S2-215LE
	3	**071436**	EP4B-S2-300R	**071444**	EP4B-S2-300RE	**071452**	EP4B-S2-300L	**071460**	EP4B-S2-300LE
22218	3-7/16	**071437**	EP4B-S2-307R	**071445**	EP4B-S2-307RE	**071453**	EP4B-S2-307L	**071461**	EP4B-S2-307LE
22220	3-15/16	**071438**	EP4B-S2-315R	**071446**	EP4B-S2-315RE	**071454**	EP4B-S2-315L	**071462**	EP4B-S2-315LE
22222	4-7/16	**071439**	EP4B-S2-407R	**071447**	EP4B-S2-407RE	**071455**	EP4B-S2-407L	**071463**	EP4B-S2-407LE
22226	4-15/16	**071440**	EP4B-S2-415R	**071448**	EP4B-S2-415RE	**071456**	EP4B-S2-415L	**071464**	EP4B-S2-415LE

*Consult Dodge For Sizes Not Listed

Shaft Size	A	B#	C#	D		E	F Bolt Dia.	G #	H #	J #	L	M	R	S	X Total Exp.	Y	Z	Set Screw Size	S/S Torque In/Lbs
				Min	Max														
2-7/16	3.20	10.50	3.49	8.31	8.69	1.87	5/8	0.87	1.63	5.72	4.06	2.75	1.20	2.00	1/4	0.025	2.94	3/8	290
2-11/16 2-15/16 3	3.59	12.00	4.00	9.18	9.82	2.13	5/8	1.00	1.88	6.33	4.61	3.13	1.34	2.25	1/4	0.025	3.47	1/2	620
3-7/16	4.01	13.50	4.49	10.75	11.25	2.37	3/4	1.13	2.25	7.69	5.50	3.75	1.51	2.50	1/4	0.025	4.05	1/2	620
3-15/16	4.47	15.25	4.50	12.25	12.75	2.25	3/4	1.13	2.44	8.70	6.00	4.25	1.34	3.13	5/16	0.025	4.50	5/8	1325
4-7/16	6.53	16.63	4.63	13.25	13.75	2.50	3/4	1.13	2.75	9.67	6.45	4.75	3.08	3.38	3/8	N/A	N/A	5/8	1325
4-15/16	6.91	18.50	5.13	15.25	15.75	2.87	7/8	1.25	3.00	11.16	7.45	5.50	3.29	3.62	3/8	N/A	N/A	5/8	1325

Notes: "A" And "R" Dimensions Do Not Include "Y" Dimension

Reference Dimension Only

FEATURES/BENEFITS PAGE B12-2	SPECIFICATION PAGE B12-4	HOW TO ORDER/NOMENCLATURE PAGE B12-4	SELECTIONS PAGE B12-7

DIMENSIONS

Steel S-2000-HD Pillow Block 4-Bolt

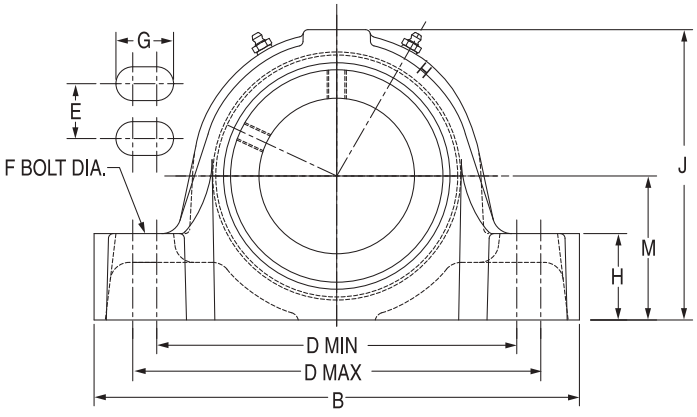

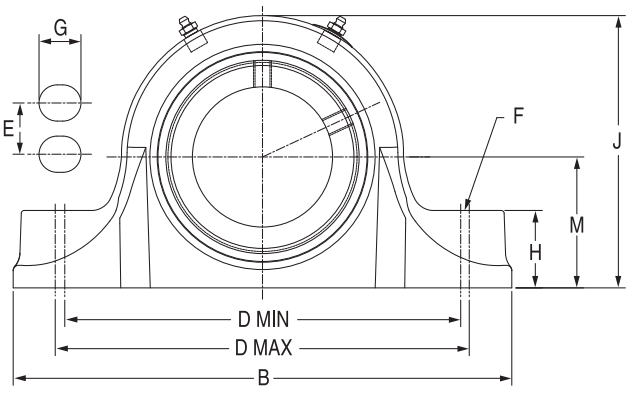

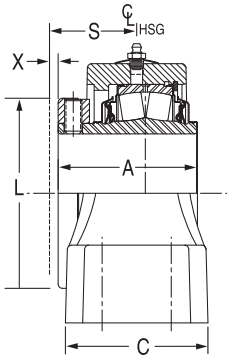

2-7/16 Thru 3-7/16
EXPANSION

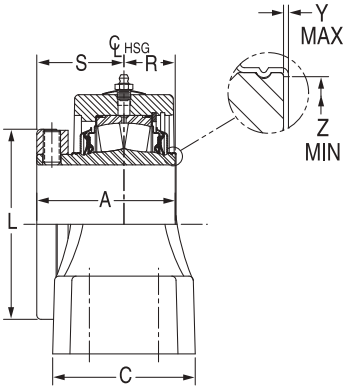

2-7/16 Thru 3-7/16
NON-EXPANSION

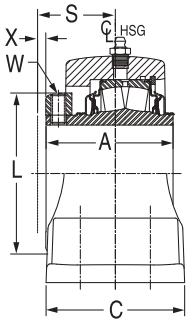

3-15/16
EXPANSION

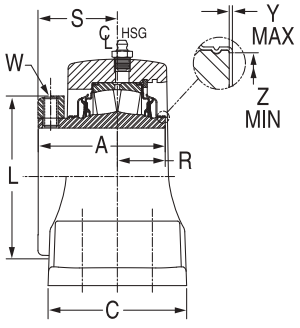

3-15/16
NON-EXPANSION

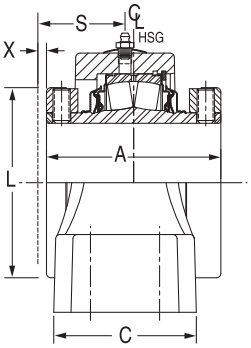

4-15/16
EXPANSION

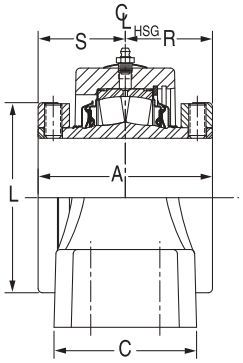

4-15/16
NON-EXPANSION

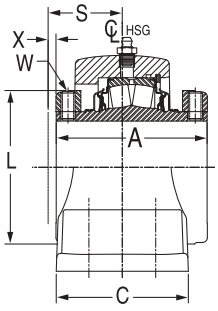

4-7/16
EXPANSION

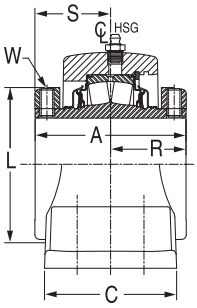

4-7/16
NON-EXPANSION

FEATURES/BENEFITS PAGE B12-2	SPECIFICATION PAGE B12-4	HOW TO ORDER/NOMENCLATURE PAGE B12-4	SELECTIONS PAGE B12-7

DIMENSIONS

Steel S-2000-HD Pillow Block 4-Bolt



Shaft Size	Dodge Non-Expansion		Dodge Expansion	
	Dodge Part No.	Description	Dodge Part No.	Description
2-7/16	**071821**	SP4B-S2-207R	**071832**	SP4B-S2-207RE
2-11/16	**071822**	SP4B-S2-211R	**071833**	SP4B-S2-211RE
2-15/16	**071823**	SP4B-S2-215R	**071834**	SP4B-S2-215RE
3	**071824**	SP4B-S2-300R	**071835**	SP4B-S2-300RE
3-7/16	**071825**	SP4B-S2-307R	**071836**	SP4B-S2-307RE
3-15/16	**071826**	SP4B-S2-315R	**071837**	SP4B-S2-315RE
4-7/16	**071827**	SP4B-S2-407R	**071838**	SP4B-S2-407RE
4-15/16	**071828**	SP4B-S2-415R	**071839**	SP4B-S2-415RE

Shaft Size	A	B	C	D		E	F Bolt Dia.	G	H	J	L	M	R	S	X Total Exp	Y	Z
				Min	Max												
2-7/16 2-11/16	3.20	9.25	3.00	6.88	7.63	1.75	1/2	1.06	1.63	5.61	4.06	2.75	1.19	2.90	1/4	0.025	2.94
2-15/16 3	3.59	10.44	3.13	7.60	9.10	1.88	5/8	1.43	1.88	6.44	4.70	3.00	1.14	2.46	1/4	0.025	3.47
3-7/16	4.02	12.30	3.75	8.88	10.88	2.00	3/4	1.88	2.25	7.56	5.50	3.75	1.48	2.54	1/4	0.025	4.05
3-15/16	4.47	14.88	4.31	10.88	13.38	2.25	3/4	2.13	2.44	8.70	6.00	4.25	1.25	3.22	5/16	0.025	4.50
4-7/16	6.53	16.13	4.75	11.88	14.5	2.50	3/4	2.19	2.75	9.67	6.45	4.75	2.87	3.66	3/8	0.036	5.00
4-15/16	6.91	17.50	5.03	15.13	15.88	2.75	7/8	1.37	3.00	11.12	7.45	5.50	3.35	3.56	3/8	0.036	5.84

"A" & "R" Dimensions Do Not Include "Y" Dimension

DIMENSIONS

Steel S2000-HD Pillow Block 4-Bolt With Type E Dimensions

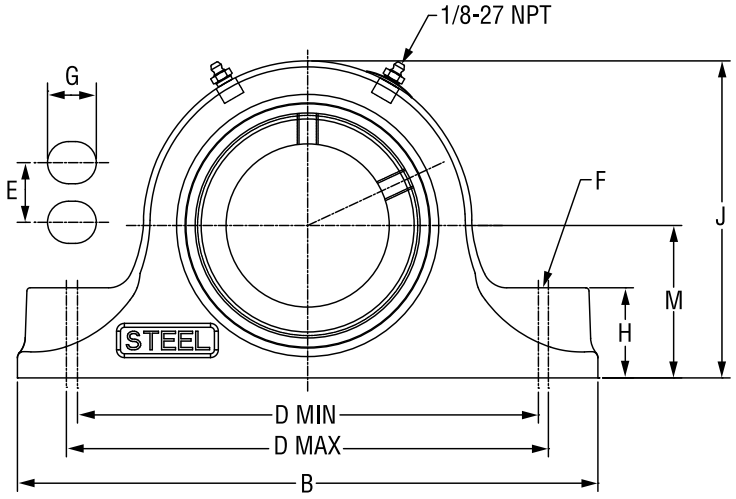

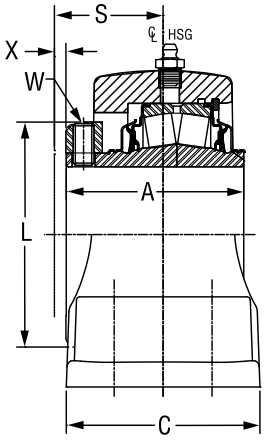

2-7/16 THRU 3-15/16
CONSTRUCTION
EXPANSION

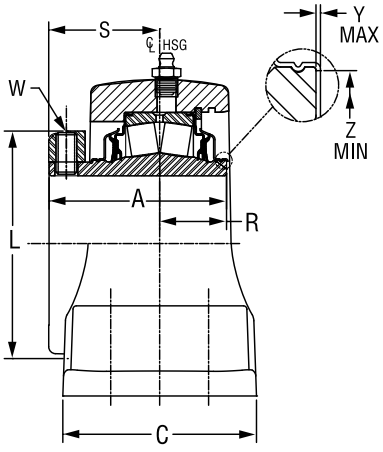

2-7/16 THRU 3-15/16
CONSTRUCTION
NON-EXPANSION

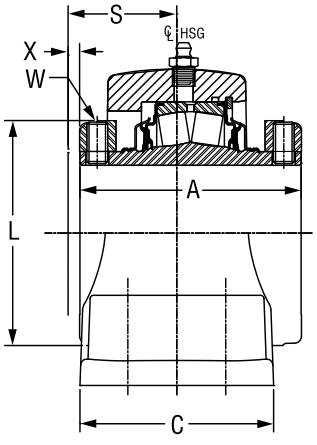

4-7/16 THRU 4-15/16
CONSTRUCTION
EXPANSION

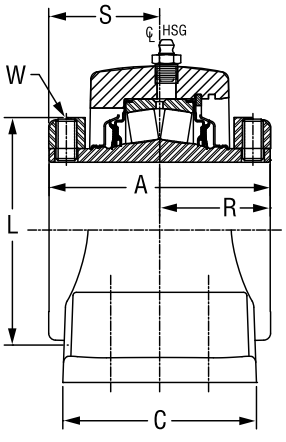

4-7/16 THRU 4-15/16
CONSTRUCTION
NON-EXPANSION

DIMENSIONS



Steel S2000-HD Pillow Block 4-Bolt With Type E Dimensions

Shaft Size	Dodge Non-Expansion		Dodge Expansion	
	Dodge Part No.	Description	Dodge Part No.	Description
2-7/16	**071962**	SEP4B-S2-207R	**071970**	SEP4B-S2-207RE
2-11/16	**071963**	SEP4B-S2-211R	**071971**	SEP4B-S2-211RE
2-15/16	**071964**	SEP4B-S2-215R	**071972**	SEP4B-S2-215RE
3	**071965**	SEP4B-S2-300R	**071973**	SEP4B-S2-300RE
3-7/16	**071966**	SEP4B-S2-307R	**071974**	SEP4B-S2-307RE
3-15/16	**071967**	SEP4B-S2-315R	**071975**	SEP4B-S2-315RE
4-7/16	**071968**	SEP4B-S2-407R	**071976**	SEP4B-S2-407RE
4-15/16	**071969**	SEP4B-S2-415R	**071977**	SEP4B-S2-415RE

Shaft Size	A	B	C	D Min	D Max	E	F Bolt Dia	G	H
2-7/16	3.20	10.25	3.25	7.13	8.75	1.88	5/8	1.57	1.63
2-11/16 2-15/16 3	3.59	10.83	3.38	8.00	9.60	2.12	5/8	1.56	1.88
3-7/16	4.01	13.63	3.75	9.25	11.25	2.38	3/4	1.88	2.25
3-15/16	4.47	14.88	4.31	10.88	13.88	2.25	3/4	2.13	2.44
4-7/16	6.53	16.13	4.75	11.88	14.50	2.50	3/4	2.19	2.75
4-15/16	6.91	17.50	5.04	15.13	15.88	2.88	7/8	1.38	3.00

"A" & "R" Dimensions Do Not Include "Y" Dimension

Reference Dimension Only

Shaft Size	J	L	M	R	S	X Total Exp	Y	Z	Set Screw Size	S/S Torque In/Lbs
2-7/16	5.71	3.86	2.75	1.20	2.00	1/4	0.025	2.94	3/8	290
2-11/16 2-15/16 3	6.32	4.61	3.13	1.34	2.25	1/4	0.025	3.47	1/2	620
3-7/16	7.69	5.50	3.75	1.51	2.50	1/4	0.025	4.05	1/2	620
3-15/16	8.70	6.00	4.25	1.25	3.22	5/16	0.025	4.50	5/8	1325
4-7/16	9.67	6.45	4.75	2.87	3.66	3/8	0.036	5.00	5/8	1325
4-15/16	11.16	7.45	5.50	3.29	3.62	3/8	N/A	N/A	5/8	1325

"A" & "R" Dimensions Do Not Include "Y" Dimension

DIMENSIONS

S-2000 Flange Bearing - Round

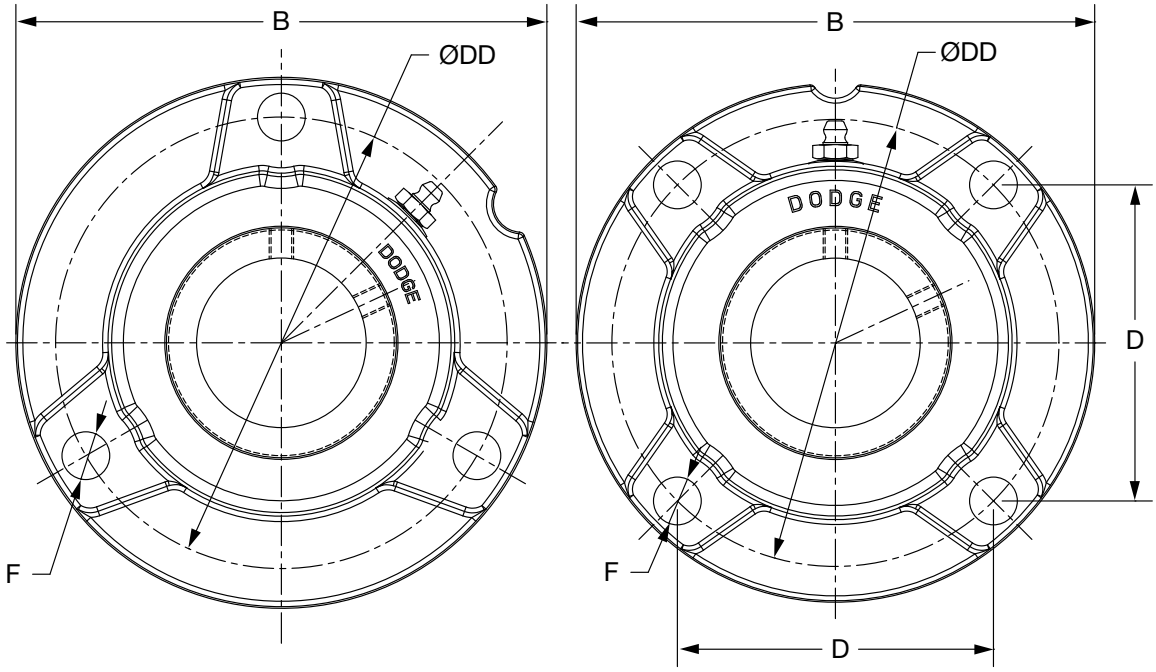

1-3/8" THRU 1-1/2" CONSTRUCTION

1-11/16" - 3" CONSTRUCTION

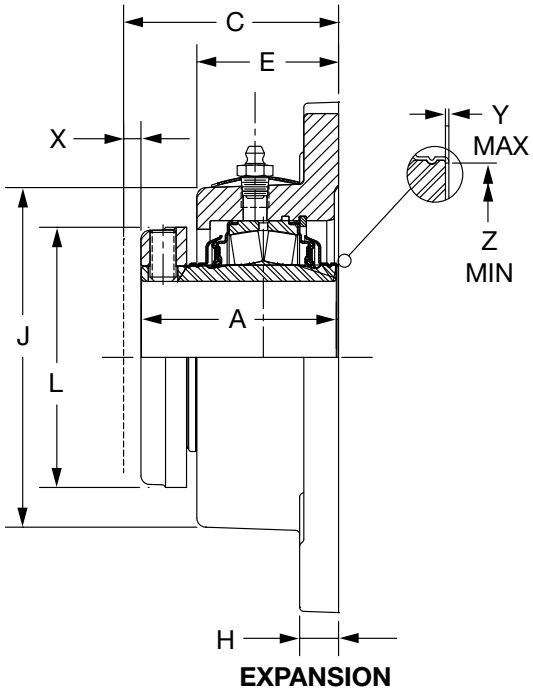

EXPANSION

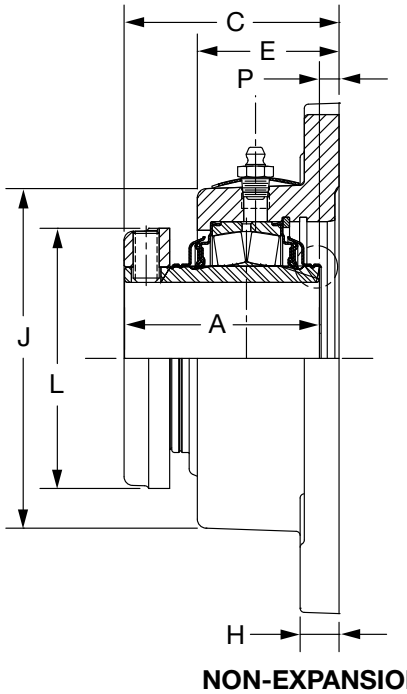

NON-EXPANSION

DIMENSIONS



S-2000 Flange Bearing - Round

Bearing	Shaft Size Inch	TRIDENT Seal				Labyrinth Seal			
		Non-Expansion		Expansion		Non-Expansion		Expansion	
		Part No.	Part Name	Part No.	Part Name	Part No.	Part Name	Part No.	Part Name
22208	1 - 3/8	**070436**	F3R-S2-106R	**070470**	F3R-S2-106RE	**070491**	F3R-S2-106L	**070523**	F3R-S2-106LE
	1 - 7/16	**070437**	F3R-S2-107R	**070471**	F3R-S2-107RE	**070492**	F3R-S2-107L	**070524**	F3R-S2-107LE
	1 - 1/2	**070438**	F3R-S2-108R	**070472**	F3R-S2-108RE	**070493**	F3R-S2-108L	**070525**	F3R-S2-108LE
22209	1 - 11/16	**070440**	F4R-S2-111R	**070474**	F4R-S2-111RE	**070495**	F4R-S2-111L	**070527**	F4R-S2-111LE
	1 - 3/4	**070441**	F4R-S2-112R	**070475**	F4R-S2-112RE	**070496**	F4R-S2-112L	**070528**	F4R-S2-112LE
22210	1 - 15/16	**070442**	F4R-S2-115R	**070476**	F4R-S2-115RE	**070497**	F4R-S2-115L	**070529**	F4R-S2-115LE
	2	**070443**	F4R-S2-200R	**070477**	F4R-S2-200RE	**070498**	F4R-S2-200L	**070530**	F4R-S2-200LE
22211	2 - 3/16	**070444**	F4R-S2-203R	**070478**	F4R-S2-203RE	**070499**	F4R-S2-203L	**070531**	F4R-S2-203LE
22213	2-7/16	**070446**	F4R-S2-207R	**070480**	F4R-S2-207RE	**070501**	F4R-S2-207L	**070533**	F4R-S2-207LE
22215	2-11/16	**070448**	F4R-S2-211R	**070482**	F4R-S2-211RE	**070503**	F4R-S2-211L	**070535**	F4R-S2-211LE
	2-15/16	**070449**	F4R-S2-215R	**070483**	F4R-S2-215RE	**070504**	F4R-S2-215L	**070536**	F4R-S2-215LE
	3	**070450**	F4R-S2-300R	**070484**	F4R-S2-300RE	**070505**	F4R-S2-300L	**070537**	F4R-S2-300LE

Shaft Size	A	B	C	D	DD	E	F Bolt Dia.	H	J	L	P	X Total Exp.	Y	Z
1 - 3/8 1 - 7/16 1 - 1/2	2.53	5.88	2.77	3.53	5.00	1.80	1/2*	0.50	3.84	2.75	0.23	3/16	0.020	1.80
1 - 11/16 1 - 3/4	2.67	6.38	2.97	3.89	5.50	1.89	1/2**	0.50	4.34	3.19	0.30	1/4	0.020	2.08
1 - 15/16 2	2.84	6.69	3.14	4.06	5.75	1.92	1/2**	0.56	4.59	3.44	0.30	1/4	0.020	2.30
2 - 3/16	2.94	7.38	3.23	4.50	6.38	2.05	5/8**	0.56	4.98	3.75	0.30	1/4	0.025	2.60
2-7/16	3.20	7.75	3.50	4.77	6.75	2.38	5/8**	0.77	5.50	406	0.30	1/4	0.025	2.95
2-11/16 2-15/16 3	3.59	9.25	3.89	5.56	7.88	2.39	3/4**	0.88	6.36	4.70	0.30	1/4	0.025	3.47

* 3 Equally spaced bolt holes

** 4 Equally spaced bolt holes

DIMENSIONS

S-2000 Flange Bearing - Square

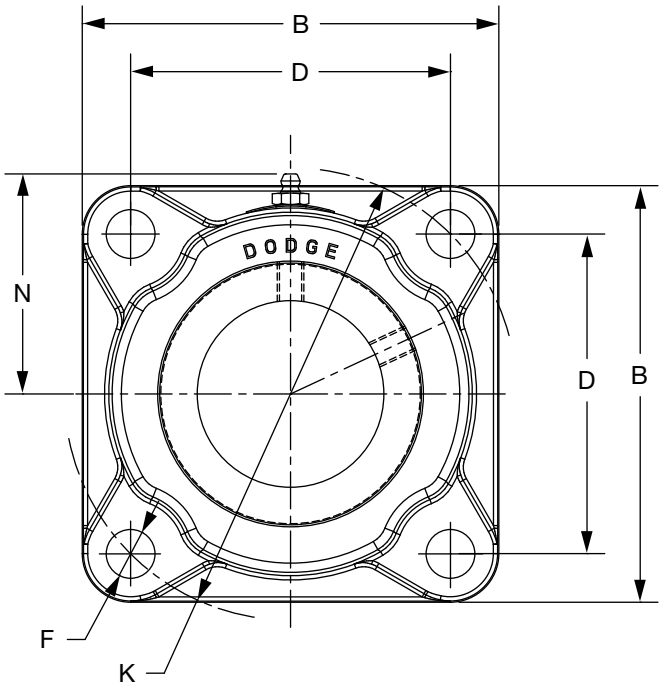

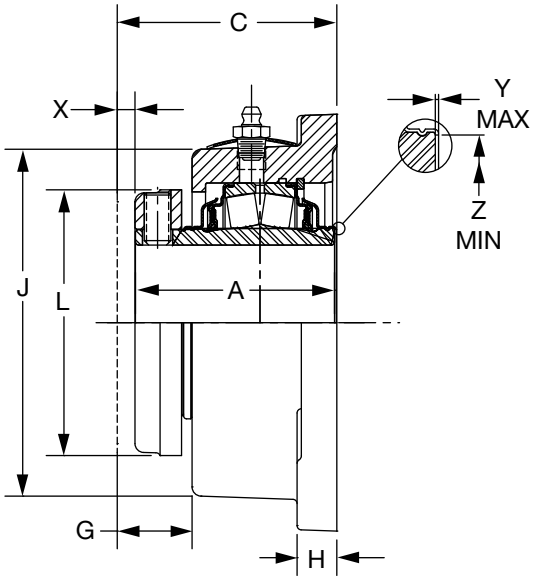

EXPANSION

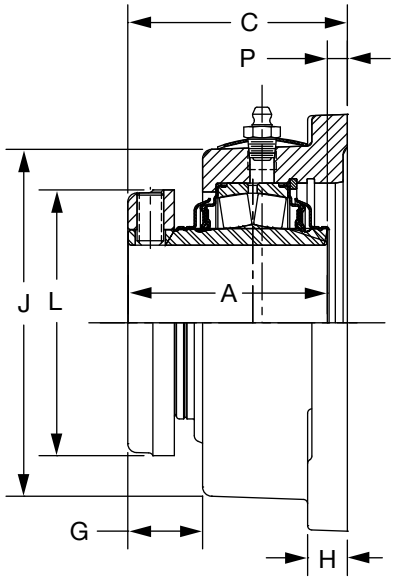

NON-EXPANSION

DIMENSIONS



S-2000 Flange Bearing - Square

Bearing	Shaft Size Inch	TRIDENT Seal				Labyrinth Seal			
		Non-Expansion		Expansion		Non-Expansion		Expansion	
		Part No.	Part Name	Part No.	Part Name	Part No.	Part Name	Part No.	Part Name
22208	1-3/8	**070541**	F4S-S2-106R	**070564**	F4S-S2-106RE	**070600**	F4S-S2-106L	**070853**	F4S-S2-106LE
	1-7/16	**070542**	F4S-S2-107R	**070565**	F4S-S2-107RE	**070601**	F4S-S2-107L	**070854**	F4S-S2-107LE
	1-1/2	**070543**	F4S-S2-108R	**070566**	F4S-S2-108RE	**070602**	F4S-S2-108L	**070855**	F4S-S2-108LE
22209	1-11/16	**070545**	F4S-S2-111R	**070568**	F4S-S2-111RE	**070604**	F4S-S2-111L	**070857**	F4S-S2-111LE
	1-3/4	**070546**	F4S-S2-112R	**070569**	F4S-S2-112RE	**070605**	F4S-S2-112L	**070858**	F4S-S2-112LE
22210	1-15/16	**070547**	F4S-S2-115R	**070570**	F4S-S2-115RE	**070606**	F4S-S2-115L	**070859**	F4S-S2-115LE
	2	**070548**	F4S-S2-200R	**070571**	F4S-S2-200RE	**070607**	F4S-S2-200L	**070860**	F4S-S2-200LE
22211	2-3/16	**070549**	F4S-S2-203R	**070572**	F4S-S2-203RE	**070608**	F4S-S2-203L	**070861**	F4S-S2-203LE
22213	2-7/16	**070551**	F4S-S2-207R	**070574**	F4S-S2-207RE	**070610**	F4S-S2-207L	**070863**	F4S-S2-207LE
22215	2-11/16	**070553**	F4S-S2-211R	**070576**	F4S-S2-211RE	**070612**	F4S-S2-211L	**070865**	F4S-S2-211LE
	2-15/16	**070554**	F4S-S2-215R	**070577**	F4S-S2-215RE	**070613**	F4S-S2-215L	**070866**	F4S-S2-215LE
	3	**070555**	F4S-S2-300R	**070578**	F4S-S2-300RE	**070614**	F4S-S2-300L	**070867**	F4S-S2-300LE
22218	3-7/16	**070557**	F4S-S2-307R	**070580**	F4S-S2-307RE	**070616**	F4S-S2-307L	**070869**	F4S-S2-307LE
22220	3-15/16	**070559**	F4S-S2-315R	**070582**	F4S-S2-315RE	**070618**	F4S-S2-315L	**070871**	F4S-S2-315LE

Shaft Size	A	B	C	D	F Bolt Dia	G	H	J	K	L	N	P	X Total Exp.	Y	Z
1-3/8 1-7/16 1-1/2	2.53	4.75	2.77	3.53	1/2	0.99	0.50	3.81	5.00	2.75	2.48	0.23	3/16	0.020	1.80
1-11/16 1-3/4	2.67	5.13	2.97	3.89	1/2	1.08	0.50	4.41	5.50	3.19	2.78	0.30	1/4	0.020	2.08
1-15/16 2	2.84	5.30	3.16	4.06	1/2	1.23	0.56	4.97	5.75	3.44	2.91	0.31	1/4	0.020	2.30
2-3/16	2.94	5.88	3.25	4.52	5/8	1.20	0.56	5.02	6.38	3.75	3.09	0.31	1/4	0.025	2.60
2-7/16	3.20	6.13	3.52	4.78	5/8	1.14	0.64	5.63	6.75	4.06	3.41	0.31	1/4	0.025	2.95
2-11/16 2-15/16 3	3.59	7.19	3.91	5.56	3/4	1.52	0.75	6.50	7.88	4.70	3.84	0.31	1/4	0.025	3.47
3-7/16	4.00	8.25	4.31	6.72	3/4	1.44	0.94	7.48	9.50	5.50	4.33	0.31	1/4	0.025	4.05
3-15/16	4.47	9.25	4.84	7.61	7/8	1.55	1.06	8.22	10.75	6.00	4.70	0.38	5/16	0.025	4.50

DIMENSIONS

S-2000 Flange Bearing - Square with Type E Dimensions

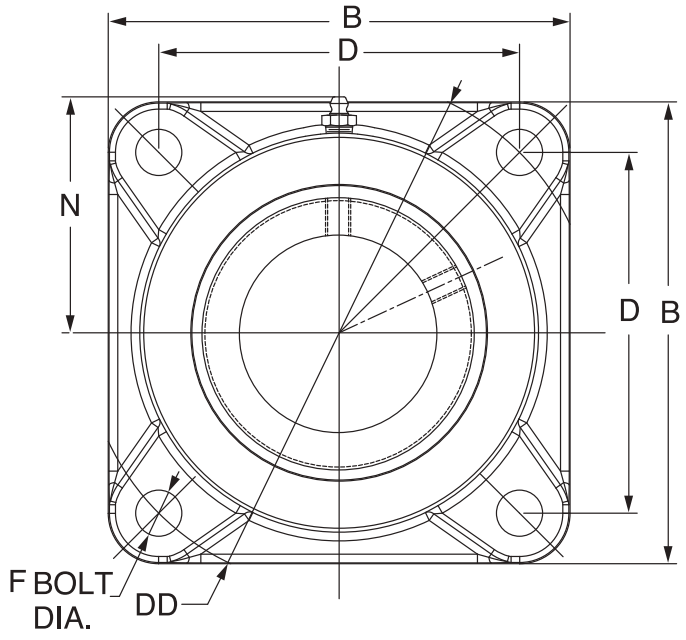

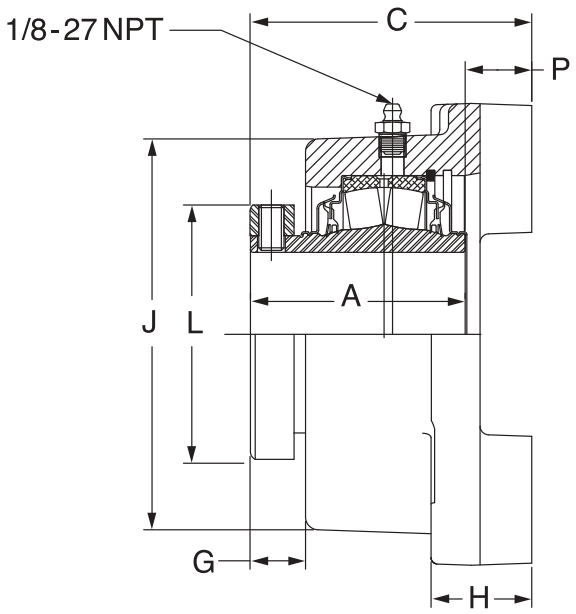

NON-EXPANSION

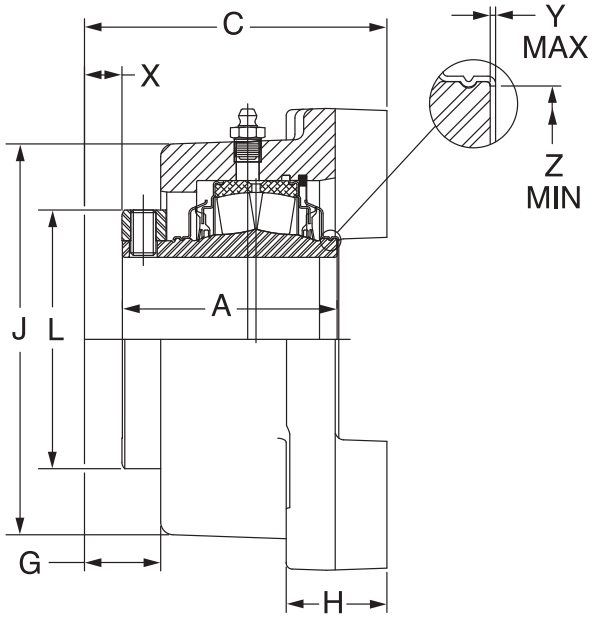

EXPANSION

FEATURES/BENEFITS PAGE B12-2	SPECIFICATION PAGE B12-4	HOW TO ORDER/NOMENCLATURE PAGE B12-4	SELECTIONS PAGE B12-7

DIMENSIONS



S-2000 Flange Bearing - Square with Type E Dimensions

Bearing Series	Shaft Size*	TRIDENT Seal				Labyrinth Seal			
		Non Expansion		Expansion		Non Expansion		Expansion	
		Part No.	Part Name	Part No.	Part Name	Part No.	Part Name	Part No.	Part Name
22208	1-3/8	**071469**	EF4B-S2-106R	**071482**	EF4B-S2-106RE	**071495**	EF4B-S2-106L	**071508**	EF4B-S2-106LE
	1-7/16	**071470**	EF4B-S2-107R	**071483**	EF4B-S2-107RE	**071496**	EF4B-S2-107L	**071509**	EF4B-S2-107LE
22209	1-11/16	**071471**	EF4B-S2-111R	**071484**	EF4B-S2-111RE	**071497**	EF4B-S2-111L	**071510**	EF4B-S2-111LE
22210	1-15/16	**071472**	EF4B-S2-115R	**071485**	EF4B-S2-115RE	**071498**	EF4B-S2-115L	**071511**	EF4B-S2-115LE
	2	**071473**	EF4B-S2-200R	**071486**	EF4B-S2-200RE	**071499**	EF4B-S2-200L	**071512**	EF4B-S2-200LE
22211	2-3/16	**071474**	EF4B-S2-203R	**071487**	EF4B-S2-203RE	**071500**	EF4B-S2-203L	**071513**	EF4B-S2-203LE
22213	2-7/16	**071475**	EF4B-S2-207R	**071488**	EF4B-S2-207RE	**071501**	EF4B-S2-207L	**071514**	EF4B-S2-207LE
	2-11/16	**071476**	EF4B-S2-211R	**071489**	EF4B-S2-211RE	**071502**	EF4B-S2-211L	**071515**	EF4B-S2-211LE
22215	2-15/16	**071477**	EF4B-S2-215R	**071490**	EF4B-S2-215RE	**071503**	EF4B-S2-215L	**071516**	EF4B-S2-215LE
	3	**071478**	EF4B-S2-300R	**071491**	EF4B-S2-300RE	**071504**	EF4B-S2-300L	**071517**	EF4B-S2-300LE
22218	3-7/16	**071479**	EF4B-S2-307R	**071492**	EF4B-S2-307RE	**071505**	EF4B-S2-307L	**071518**	EF4B-S2-307LE
22220	3-15/16	**071480**	EF4B-S2-315R	**071493**	EF4B-S2-315RE	**071506**	EF4B-S2-315L	**071519**	EF4B-S2-315LE
22222	4-7/16	**071481**	EF4B-S2-407R	**071494**	EF4B-S2-407RE	**071507**	EF4B-S2-407L	**071520**	EF4B-S2-407LE

*Consult Dodge For Sizes Not Listed

Shaft Size	A	B #	C #	D	DD	F Bolt Dia.	G	H #	J #	L	N	P	X Total Exp.	Y	Z	Set Screw Size	S/S Torque In/Lbs
1-3/8 1-7/16	2.53	4.62	3.06	3.50	4.95	1/2	0.57	1.06	3.88	2.55	2.34	0.53	5/32	0.020	1.80	5/16-18	165
1-11/16	2.67	5.37	3.50	4.13	5.83	1/2	0.53	1.19	4.18	3.01	2.51	0.84	3/16	0.020	2.08	5/16-18	165
1-15/16 2	2.84	5.62	3.63	4.37	6.19	1/2	0.65	1.18	4.36	3.44	2.60	0.78	7/32	0.020	2.30	3/8-16	290
2-3/16	2.94	6.25	3.87	4.87	6.89	5/8	0.60	1.38	4.88	3.50	2.88	0.93	1/4	0.025	2.60	3/8-16	290
2-7/16	3.20	6.88	4.19	5.37	7.60	5/8	0.83	1.50	5.81	4.06	3.32	0.98	1/4	0.025	2.95	3/8-16	290
2-11/16 2-15/16 3	3.59	7.76	4.69	6.00	8.49	3/4	0.88	1.61	6.30	4.61	3.58	1.09	1/4	0.025	3.47	1/2-13	620
3-7/16	4.01	9.25	5.25	7.00	9.90	3/4	0.96	1.87	7.44	5.50	4.15	1.24	1/4	0.025	4.05	1/2-13	620
3-15/16	4.48	10.25	6.50	7.75	10.96	7/8	1.00	2.12	8.27	6.00	4.58	2.02	5/16	0.025	4.50	5/8-11	1325
4-7/16	6.53	10.88	7.10	8.75	12.37	7/8	1.39	2.43	9.13	6.45	5.01	0.56	3/8	N/A	N/A	5/8-11	1325

Note(S): "P" Dimension Is For Non-Expansion Only

"A" And "P" Dimensions Do Not Include "Y" Dimension

- Reference Dimensions Only

DIMENSIONS

Steel S-2000-HD Flange 4-Bolt

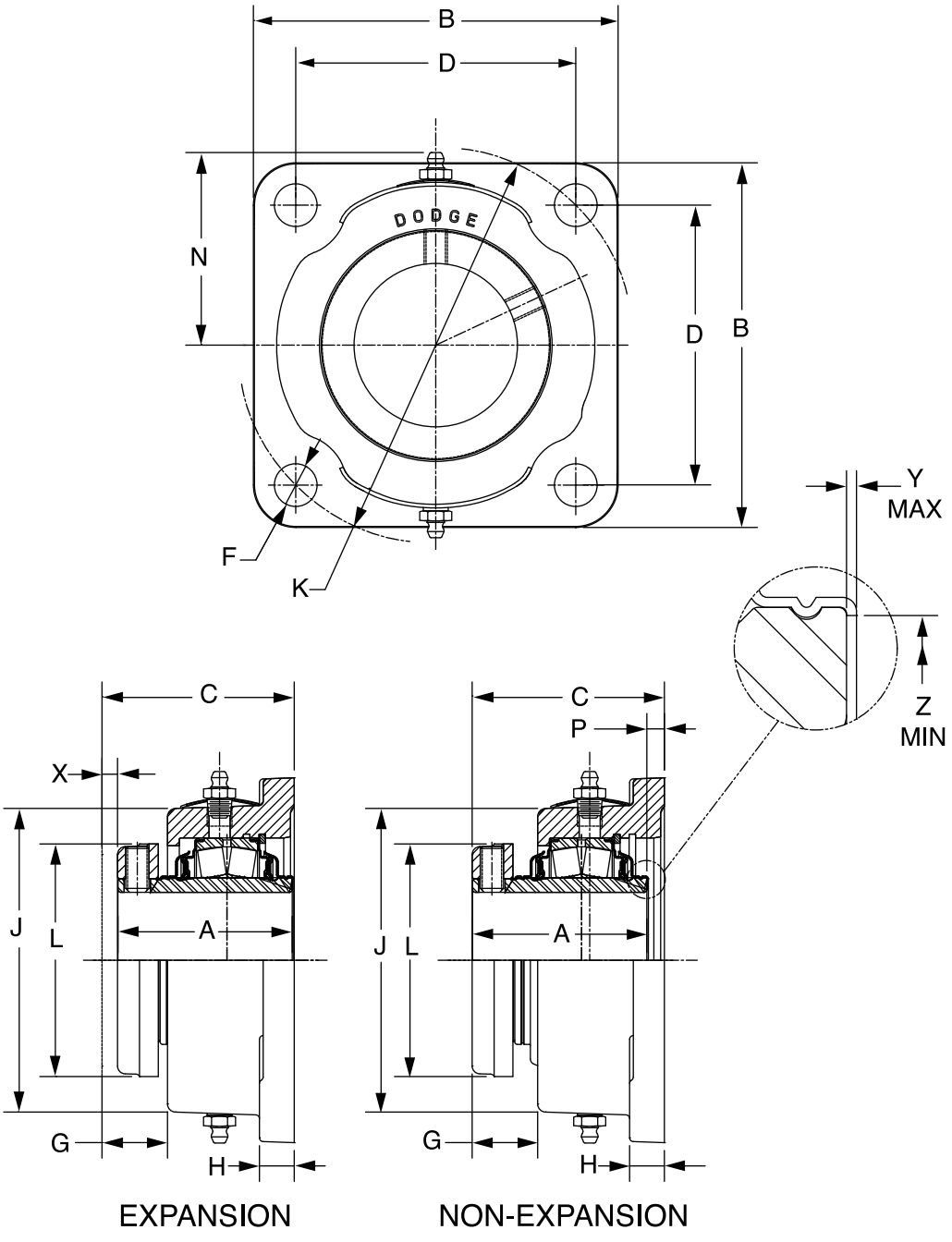

DIMENSIONS



Steel S-2000-HD Flange 4-Bolt

Shaft Size	Dodge Non-Expansion		Dodge Expansion	
	Dodge Part No.	Description	Dodge Part No.	Description
1-3/8	**072386**	SF4S-S2-106R	**072400**	SF4S-S2-106RE
1-7/16	**072387**	SF4S-S2-107R	**072401**	SF4S-S2-107RE
1-1/2	**072388**	SF4S-S2-108R	**072402**	SF4S-S2-108RE
1-11/16	**072389**	SF4S-S2-111R	**072403**	SF4S-S2-111RE
1-3/4	**072390**	SF4S-S2-112R	**072404**	SF4S-S2-112RE
1-15/16	**072391**	SF4S-S2-115R	**072405**	SF4S-S2-115RE
2	**072392**	SF4S-S2-200R	**072406**	SF4S-S2-200RE
2-3/16	**072393**	SF4S-S2-203R	**072407**	SF4S-S2-203RE
2-7/16	**072394**	SF4S-S2-207R	**072408**	SF4S-S2-207RE
2-11/16	**072395**	SF4S-S2-211R	**072409**	SF4S-S2-211RE
2-15/16	**072396**	SF4S-S2-215R	**072410**	SF4S-S2-215RE
3	**072397**	SF4S-S2-300R	**072411**	SF4S-S2-300RE
3-7/16	**072398**	SF4S-S2-307R	**072412**	SF4S-S2-307RE
3-15/16	**072399**	SF4S-S2-315R	**072413**	SF4S-S2-315RE

Shaft Size	A	B	C	D	F Bolt Dia.	G	H	J	K	L	N	P	X Total Exp	Y	Z
1-3/8 1-7/16 1-1/2	2.53	4.62	2.77	3.54	1/2	0.76	0.88	3.70	5.00	2.75	2.25	0.24	3/16	0.02	1.80
1-11/16 1-3/4	2.67	5.37	2.87	3.89	1/2	0.77	0.88	4.41	5.50	3.19	2.62	0.20	1/4	0.02	2.08
1-15/16 2	2.84	5.18	3.16	4.07	1/2	0.91	0.91	4.66	5.75	3.44	2.75	0.32	1/4	0.02	2.30
2-3/16	2.94	5.87	3.16	4.51	5/8	0.83	0.75	5.03	6.38	3.75	2.93	0.22	1/4	0.02	2.59
2-7/16	3.20	6.18	3.34	4.77	5/8	0.72	1.00	5.63	6.75	4.06	3.23	0.14	1/4	0.025	2.94
2-11/16 2-15/16 3	3.59	7.18	3.87	5.57	3/4	1.04	1.06	6.51	7.88	4.70	3.75	0.28	1/4	0.025	3.47
3-7/16	4.00	8.37	4.11	6.72	3/4	0.78	1.28	7.49	9.50	5.50	4.17	0.11	1/4	0.025	4.05
3-15/16	4.48	9.49	4.84	7.60	1	0.85	1.50	8.22	10.75	6.00	4.68	0.36	5/32	0.025	4.50

"P" Dimension Is For Non-Expansion Only

"A" & "P" Dimensions Do Not Include "Y" Dimension

DIMENSIONS

S-2000 Piloted Flange

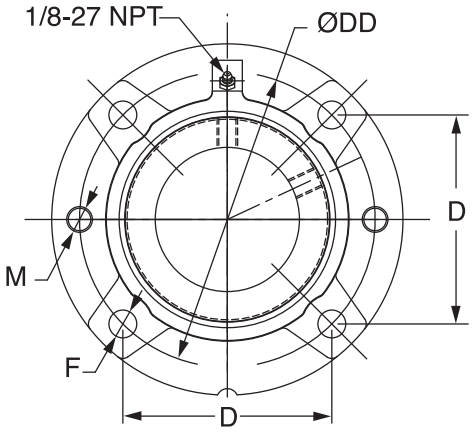

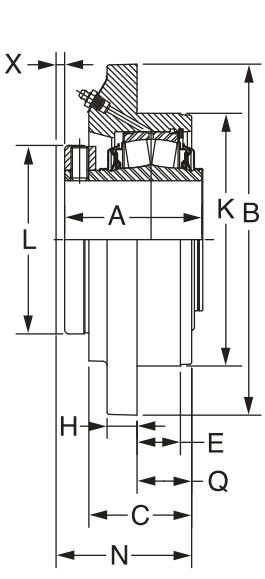

EXPANSION

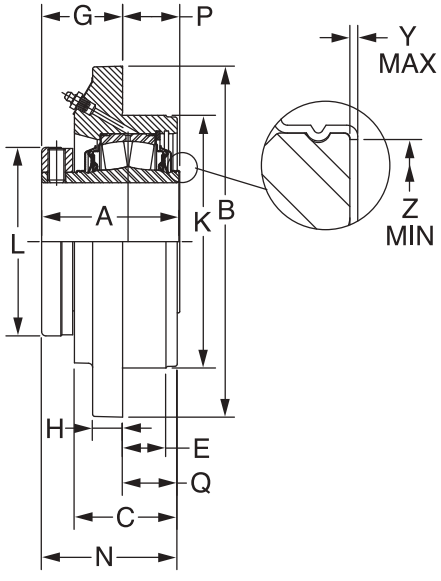

NON-EXPANSION

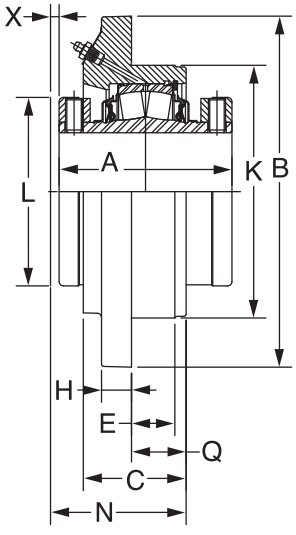

4-7/16 THRU 5" CONSTRUCTION

EXPANSION

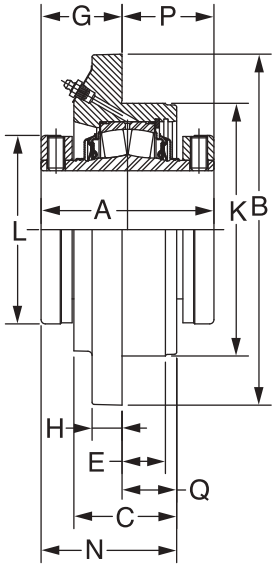

4-7/16 THRU 5" CONSTRUCTION

NON-EXPANSION

DIMENSIONS

S-2000 Piloted Flange



Bearing	Shaft Size Inch	TRIDENT Seal				Labyrinth Seal			
		Non-Expansion		Expansion		Non-Expansion		Expansion	
		Part No.	Part Name	Part No.	Part Name	Part No.	Part Name	Part No.	Part Name
22208	1-3/8	**070644**	FC-S2-106R	**070671**	FC-S2-106RE	**070698**	FC-S2-106L	**070725**	FC-S2-106LE
	1-7/16	**070645**	FC-S2-107R	**070672**	FC-S2-107RE	**070699**	FC-S2-107L	**070726**	FC-S2-107LE
	1-1/2	**070646**	FC-S2-108R	**070673**	FC-S2-108RE	**070700**	FC-S2-108L	**070727**	FC-S2-108LE
22209	1-11/16	**070648**	FC-S2-111R	**070675**	FC-S2-111RE	**070702**	FC-S2-111L	**070729**	FC-S2-111LE
	1-3/4	**070649**	FC-S2-112R	**070676**	FC-S2-112RE	**070703**	FC-S2-112L	**070730**	FC-S2-112LE
22210	1-15/16	**070650**	FC-S2-115R	**070677**	FC-S2-115RE	**070704**	FC-S2-115L	**070731**	FC-S2-115LE
	2	**070651**	FC-S2-200R	**070678**	FC-S2-200RE	**070705**	FC-S2-200L	**070732**	FC-S2-200LE
22211	2-3/16	**070652**	FC-S2-203R	**070679**	FC-S2-203RE	**070706**	FC-S2-203L	**070733**	FC-S2-203LE
22213	2-7/16	**070654**	FC-S2-207R	**070681**	FC-S2-207RE	**070708**	FC-S2-207L	**070735**	FC-S2-207LE
22215	2-11/16	**070656**	FC-S2-211R	**070683**	FC-S2-211RE	**070710**	FC-S2-211L	**070737**	FC-S2-211LE
	2-15/16	**070657**	FC-S2-215R	**070684**	FC-S2-215RE	**070711**	FC-S2-215L	**070738**	FC-S2-215LE
	3	**070658**	FC-S2-300R	**070685**	FC-S2-300RE	**070712**	FC-S2-300L	**070739**	FC-S2-300LE
22218	3-7/16	**070660**	FC-S2-307R	**070687**	FC-S2-307RE	**070714**	FC-S2-307L	**070741**	FC-S2-307LE
22220	3-15/16	**070662**	FC-S2-315R	**070689**	FC-S2-315RE	**070716**	FC-S2-315L	**070743**	FC-S2-315LE
22222	4-7/16 **	**070664**	FC-S2-407R	**070691**	FC-S2-407RE	**070718**	FC-S2-407L	**070745**	FC-S2-407LE
22226	4-15/16 **	**070666**	FC-S2-415R	**070693**	FC-S2-415RE	**070720**	FC-S2-415L	**070747**	FC-S2-415LE

Shaft Size	A	B	C	D	DD	E	F Bolt Dia.	G	H	* K	L	M	N	P	Q	X Total Exp.	Y	Z
1-3/8 1-7/16 1-1/2	2.53	5.25	1.84	3.09	4.38	0.75	3/8	1.31	0.50	3.63	2.75	3/8-16	2.55	1.22	1.22	3/16	0.020	1.80
1-11/16 1-3/4	2.67	6.13	1.91	3.63	5.13	0.88	7/16	1.45	0.50	4.25	3.19	7/16-14	2.72	1.22	1.27	1/4	0.020	2.08
1-15/16 2	2.84	6.38	2.00	3.80	5.38	0.88	7/16	1.59	0.56	4.50	3.44	7/16-14	2.86	1.25	1.27	1/4	0.020	2.30
2-3/16	2.94	7.13	2.19	4.25	6.00	1.00	1/2	1.56	0.56	5.00	3.75	1/2-13	2.98	1.38	1.42	1/4	0.025	2.59
2-7/16	3.20	7.63	2.50	4.59	6.50	1.00	1/2	1.64	0.63	5.50	4.06	1/2-13	3.20	1.56	1.56	1/4	0.025	2.94
2-11/16 2-15/16 3	3.59	8.75	2.63	5.30	7.50	1.25	5/8	2.03	0.75	6.38	4.70	5/8-11	3.64	1.56	1.63	1/4	0.025	3.47
3-7/16	4.00	10.25	3.00	6.09	8.63	1.27	3/4	2.36	0.94	7.38	5.50	3/4-10	3.88	1.64	1.52	1/4	0.025	4.05
3-15/16	4.47	10.88	3.50	6.63	9.38	1.47	3/4	2.66	1.13	8.13	6.00	3/4-10	4.56	1-31	1.91	5/16	0.025	4.50
4-7/16	6.53	13.58	4.00	5.88	11.75	1.45	3/4**	3.53	1.00	10.25	6.45	3/4-10	5.50	3.00	1.98	3/8	N/A	N/A
4-15/16	6.91	14.84	4.38	6.38	12.75	1.70	7/8**	3.44	1.25	11.00	7.45	7/8-9	5.86	3.47	2.42	3/8	N/A	N/A

** Housing utilize 6 bolts equally spaced

* +.000/-.002"

FEATURES/BENEFITS PAGE B12-2	SPECIFICATION PAGE B12-4	HOW TO ORDER/NOMENCLATURE PAGE B12-4	SELECTIONS PAGE B12-7

DIMENSIONS

S-2000 Piloted Flange with Type E Dimensions

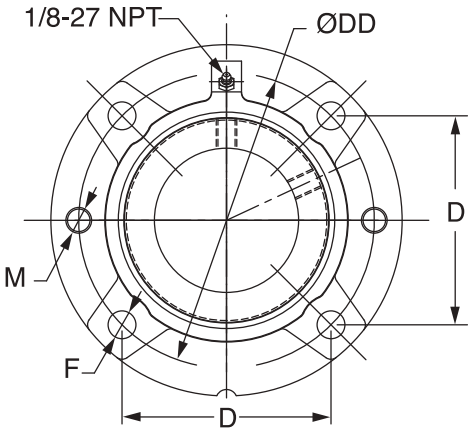

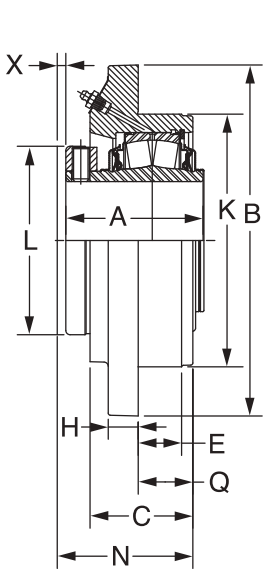

EXPANSION

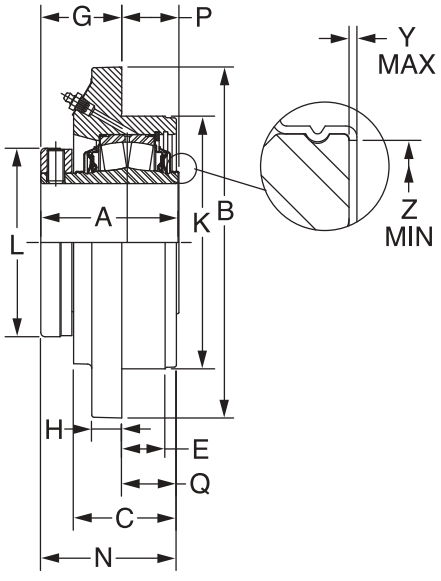

NON-EXPANSION

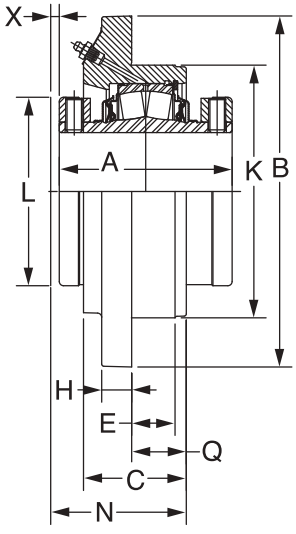

4-7/16 THRU 5" CONSTRUCTION

EXPANSION

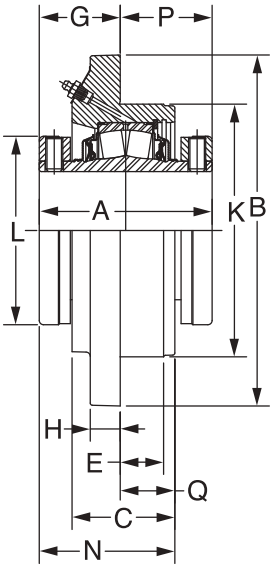

4-7/16 THRU 5" CONSTRUCTION

NON-EXPANSION

DIMENSIONS



S-2000 Piloted Flange with Type E Dimensions

Bearing Series	Shaft Size*	TRIDENT SEAL				Labyrinth Seal			
		Non Expansion		Expansion		Non Expansion		Expansion	
		Part No.	Part Name	Part No.	Part Name	Part No.	Part Name	Part No.	Part Name
22208	1-3/8	**070644**	FC-S2-106R	**070671**	FC-S2-106RE	**070698**	FC-S2-106L	**070725**	FC-S2-106LE
	1-7/16	**070645**	FC-S2-107R	**070672**	FC-S2-107RE	**070699**	FC-S2-107L	**070726**	FC-S2-107LE
22209	1-11/16	**070648**	FC-S2-111R	**070675**	FC-S2-111RE	**070702**	FC-S2-111L	**070729**	FC-S2-111LE
22210	1-15/16	**070650**	FC-S2-115R	**070677**	FC-S2-115RE	**070704**	FC-S2-115L	**070731**	FC-S2-115LE
	2	**070651**	FC-S2-200R	**070678**	FC-S2-200RE	**070705**	FC-S2-200L	**070732**	FC-S2-200LE
22211	2-3/16	**070652**	FC-S2-203R	**070679**	FC-S2-203RE	**070706**	FC-S2-203L	**070733**	FC-S2-203LE
22213	2-7/16	**070654**	FC-S2-207R	**070681**	FC-S2-207RE	**070708**	FC-S2-207L	**070735**	FC-S2-207LE
22215	2-11/16	**070656**	FC-S2-211R	**070683**	FC-S2-211RE	**070710**	FC-S2-211L	**070737**	FC-S2-211LE
	2-15/16	**070657**	FC-S2-215R	**070684**	FC-S2-215RE	**070711**	FC-S2-215L	**070738**	FC-S2-215LE
	3	**070658**	FC-S2-300R	**070685**	FC-S2-300RE	**070712**	FC-S2-300L	**070739**	FC-S2-300LE
22218	3-7/16	**070660**	FC-S2-307R	**070687**	FC-S2-307RE	**070714**	FC-S2-307L	**070741**	FC-S2-307LE
22220	3-15/16	**070662**	FC-S2-315R	**070689**	FC-S2-315RE	**070716**	FC-S2-315L	**070743**	FC-S2-315LE
22222	4-7/16	**071521**	EFC-S2-407R	**071523**	EFC-S2-407RE	**071525**	EFC-S2-407L	**071527**	EFC-S2-407LE
22226	4-15/16	**071522**	EFC-S2-415R	**071524**	EFC-S2-415RE	**071526**	EFC-S2-415L	**071528**	EFC-S2-415LE

Shaft Size	A	B #	C #	D	DD	E #	F Bolt Dia.	G	H #	K ##	L	M	N	P	Q #	X Total Exp.	Y	Z	Set Screw Size	S/S Torque In/Lbs
1-3/8 1-7/16	2.53	5.25	1.84	3.09	4.38	0.75	3/8	1.31	0.50	3.625	2.55	3/8-16	2.53	1.22	1.22	3/16	0.020	1.80	5/16	165
1-11/16	2.67	6.13	1.91	3.63	5.13	0.88	7/16	1.45	0.50	4.250	3.01	7/16-14	2.72	1.22	1.26	1/4	0.020	2.08	5/16	165
1-15/16 2	2.84	6.38	2.00	3.80	5.38	0.88	7/16	1.59	0.56	4.500	3.44	7/16-14	2.86	1.25	1.26	1/4	0.020	2.30	3/8	290
2-3/16	2.94	7.13	2.19	4.25	6.00	1.00	1/2	1.56	0.56	5.000	3.50	1/2-13	2.98	1.38	1.42	1/4	0.025	2.59	3/8	290
2-7/16	3.20	7.63	2.50	4.59	6.50	1.00	1/2	1.64	0.63	5.500	4.06	1/2-13	3.20	1.56	1.56	1/4	0.025	2.94	3/8	290
2-11/16 2-15/16 3	3.59	8.75	2.63	5.30	7.50	1.25	5/8	2.03	0.75	6.375	4.61	5/8-11	3.64	1.56	1.63	1/4	0.025	3.47	1/2	620
3-7/16	4.01	10.25	3.00	6.09	8.63	1.26	3/4	2.36	0.94	7.375	5.50	3/4-10	3.88	1.65	1.52	1/4	0.025	4.05	1/2	620
3-15/16	4.47	10.88	3.50	6.63	9.38	1.47	3/4	2.66	1.13	8.125	6.00	3/4-10	4.56	1.81	1.91	5/16	0.025	4.50	5/8	1325
4-7/16	6.53	13.50	4.58	5.88	11.75	1.45	3/4 **	3.00	0.94	10.250	6.45	3/4-10	5.63	3.53	2.63	3/8	N/A	N/A	5/8	1325
4-15/16	6.91	14.75	4.88	6.38	12.75	1.70	7/8 **	2.97	1.25	11.000	7.45	7/8-9	5.95	3.94	3.01	3/8	N/A	N/A	5/8	1325

- +0.000
-0.002

- Reference Dimension Only

Note(S): "P" And "G" Dimensions Are For Non-Expansion Only
"A" And "P" Dimensions Do Not Include "Y" Dimension

FEATURES/BENEFITS PAGE B12-2	SPECIFICATION PAGE B12-4	HOW TO ORDER/NOMENCLATURE PAGE B12-4	SELECTIONS PAGE B12-7

DIMENSIONS

S-2000 Wide Slot Take-Up
1-3/8 THRU 2-3/16 INCH

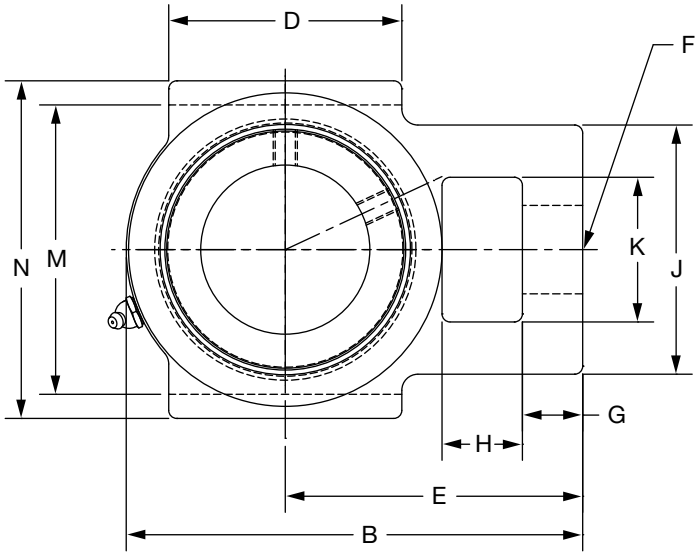

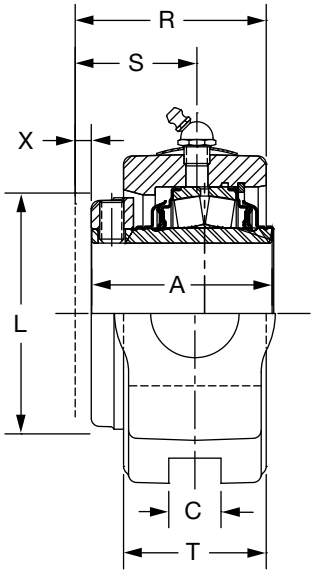

EXPANSION

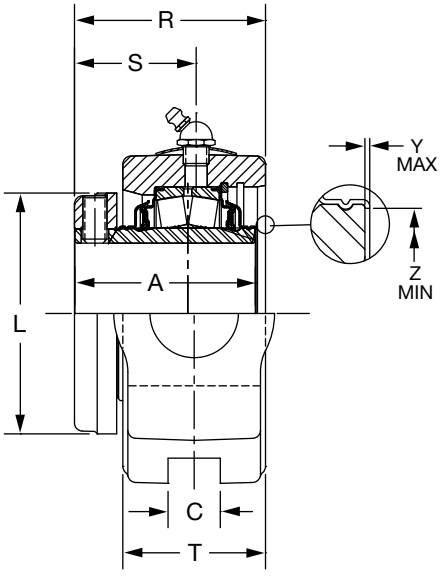

NON-EXPANSION

DIMENSIONS



S-2000 Wide Slot Take-Up
1-3/8 THRU 2-3/16 INCH

Bearing	Shaft Size Inch	Take-Up Frame	TRIDENT Seal			
			Non-Expansion		Expansion	
			Part No.	Part Name	Part No.	Part Name
22208	1-3/8	CP-308	**070752**	WSTU-S2-106R	**070779**	WSTU-S2-106RE
	1-7/16		**070753**	WSTU-S2-107R	**070780**	WSTU-S2-107RE
	1-1/2		**070754**	WSTU-S2-108R	**070781**	WSTU-S2-108RE
22209	1-11/16	CP-400	**070756**	WSTU-S2-111R	**070783**	WSTU-S2-111RE
	1-3/4		**070757**	WSTU-S2-112R	**070784**	WSTU-S2-112RE
22210	1-15/16	CP-400	**070758**	WSTU-S2-115R	**070785**	WSTU-S2-115RE
	2		**070759**	WSTU-S2-200R	**070786**	WSTU-S2-200RE
22211	2-3/16	CP-408	**070760**	WSTU-S2-203R	**070787**	WSTU-S2-203RE

Shaft Size	A	B	C	D	E	F	G	H	J	K
1-3/8 1-7/16 1-1/2	2.53	5.06	0.53	2.75	3.19	7/8	0.69	0.63	2.44	1.44
1-11/16 1-3/4	2.67	5.94	0.69	3.13	3.81	1-1/8	0.94	0.75	3.31	1.94
1-15/16 2	2.84	6.19	0.69	3.63	3.94	1-1/8	0.94	0.75	3.31	1.94
2-3/16	2.94	7.06	0.81	3.63	4.63	1-3/8	0.94	1.25	3.88	2.25

Shaft Size	L	M	N	R	S	T	X Total Exp	Y	Z
1-3/8 1-7/16 1-1/2	2.75	3.50	4.13	2.73	1.70	2.06	3/16	0.020	1.80
1-11/16 1-3/4	3.19	4.00	4.75	2.83	1.81	2.03	1/4	0.020	2.08
1-15/16 2	3.44	4.00	4.75	2.94	1.94	2.00	1/4	0.020	2.30
2-3/16	3.75	4.50	5.25	3.09	1.98	2.22	1/4	0.020	2.59

DIMENSIONS

S-2000 Wide Slot Take-Up
2-7/16 THRU 4-15/16 INCH

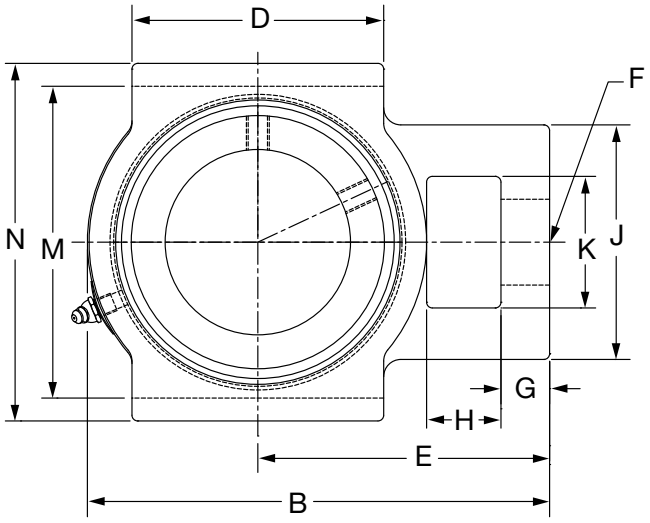

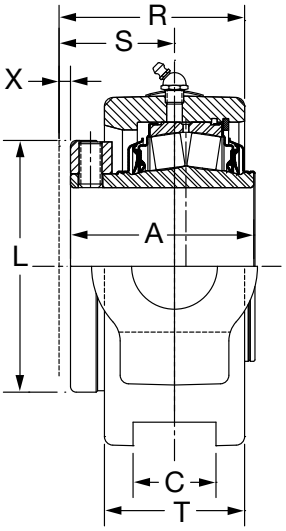

1-3/8 THRU 3-15/16" CONSTRUCTION

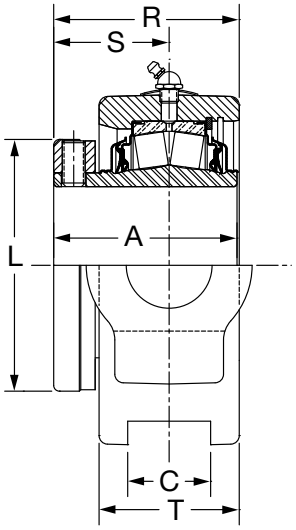

1-3/8 THRU 3-15/16" CONSTRUCTION

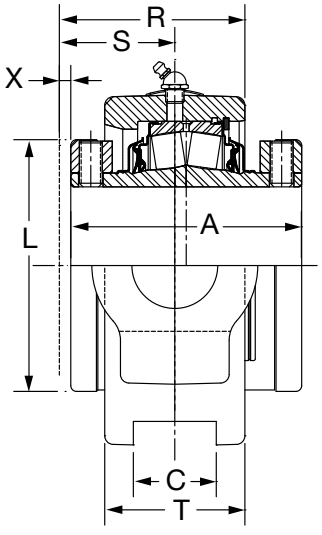

4-7/16 THRU 4-15/16" CONSTRUCTION

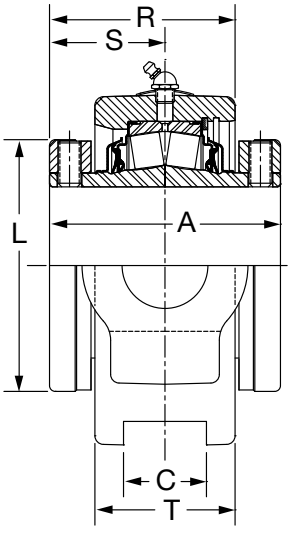

4-7/16 THRU 4-15/16" CONSTRUCTION



S-2000 Wide Slot Take-Up
2-7/16 THRU 4-15/16 INCH

Bearing	Shaft Size Inch	Take-Up Frame	TRIDENT Seal			
			Non-Expansion		Expansion	
			Part Number	Part Name	Part Number	Part Name
22213	2-7/16	**CP-502**	**070762**	WSTU-S2-207R	**070789**	WSTU-S2-207RE
22215	2-11/16	**CP-515**	**070764**	WSTU-S2-211R	**070791**	WSTU-S2-211RE
	2-15/16		**070765**	WSTU-S2-215R	**070792**	WSTU-S2-215RE
	3		**070766**	WSTU-S2-300R	**070793**	WSTU-S2-300RE
22218	3-7/16	**CP-613**	**070768**	WSTU-S2-307R	**070795**	WSTU-S2-307RE
22220	3-15/16	**CP-810**	**070770**	WSTU-S2-315R	**070797**	WSTU-S2-315RE
22222	4-7/16	**CP-908**	**070772**	WSTU-S2-407R	**070799**	WSTU-S2-407RE
22226	4-15/16	**CP-1004**	**070774**	WSTU-S2-415R	**070801**	WSTU-S2-415RE

Shaft Size	A	B	C	D	E	F	G	H	J	K
2-7/16	3.20	7.69	1.06	4.38	5.00	1-3/8	1.06	1.25	4.25	2.50
2-11/16 2-15/16 3	3.59	8.88	1.81	4.50	5.75	1-5/8	1.13	1.50	4.88	2.75
3-7/16	4.00	10.06	1.81	5.50	6.38	1-7/8	1.06	1.63	5.13	2.88
3-15/16	4.47	12.56	2.06	7.00	6.38	2-1/8	2.06	2.13	6.00	3.38
4-7/16	6.53	13.38	2.06	7.00	8.75	2-1/8	2.00	2.13	6.78	3.38
4-15/16	6.91	15.63	2.06	9.00	10.31	2-3/8	2.50	2.50	7.00	3.75

Shaft Size	L	M	N	R	S	T	X Total Exp	Y	Z
2-7/16	4.06	5.13	5.88	3.20	2.00	2.44	1/4	0.025	2.94
2-11/16 2-15/16 3	4.70	5.94	6.69	3.75	2.41	2.69	1/4	0.025	3.47
3-7/16	5.50	6.81	7.81	4.05	2.52	3.06	1/4	0.025	4.05
3-15/16	6.00	8.63	9.44	4.58	2.86	3.44	5/16	0.025	4.50
4-7/16	6.45	9.50	10.33	5.34	3.47	3.75	3/8	N/A	N/A
4-15/16	7.45	10.25	11.25	5.73	3.64	4.19	3/8	N/A	N/A

See Page B15-20 for CP Take-Up Frame

DIMENSIONS

TPHU Take-Up

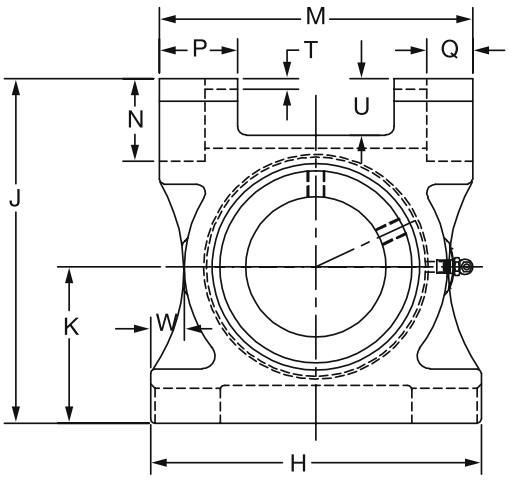

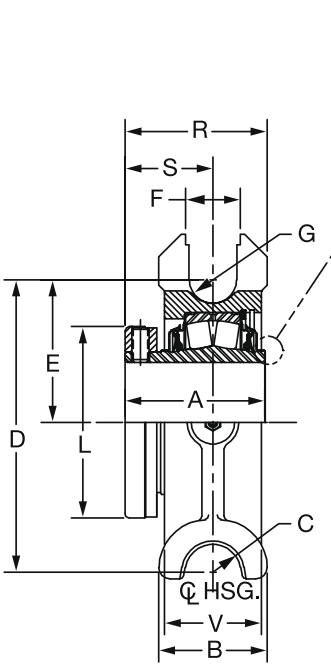

1-3/8" THRU 3-15/16"
CONSTRUCTION
NON-EXPANSION

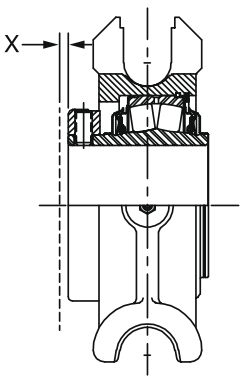

1-3-8" THRU 3-15/16
CONSTRUCTION
EXPANSION

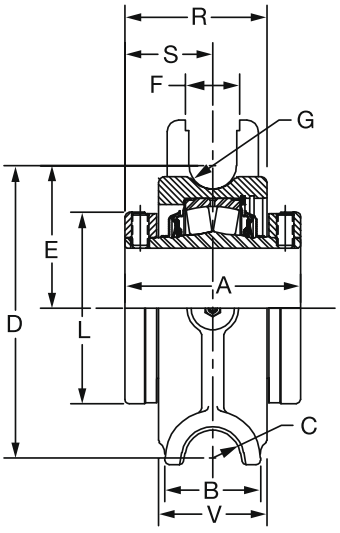

4-7/16" THRU 5"
CONSTRUCTION
NON-EXPANSION

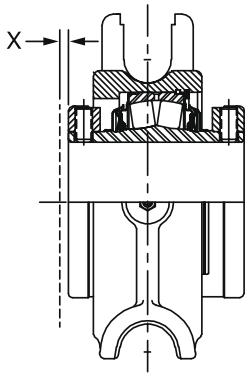

4-7-16" THRU 5"
CONSTRUCTION
EXPANSION

DIMENSIONS

DODGE



TPHU Take-Up

Bearing Inch	Shaft Size	Take-Up Frame		TRIDENT Seal			
				Non-Expansion		Expansion	
				Part Number	Part Name	Part Number	Part Name
22210	1-15/16	TP10	TPHU110	070811	TPHU-S2-115R	070829	TPHU-S2-115RE
	2			070812	TPHU-S2-200R	070830	TPHU-S2-200RE
22211	2-3/16	TP30	TPHU120	070813	TPHU-S2-203R	070831	TPHU-S2-203RE
22213	2-7/16	TP40	TPHU130	070815	TPHU-S2-207R	070833	TPHU-S2-207RE
22215	2-11/16	TP40	TPHU140	070817	TPHU-S2-211R	070835	TPHU-S2-211RE
	2-15/16			070818	TPHU-S2-215R	070836	TPHU-S2-215RE
	3			070819	TPHU-S2-300R	070837	TPHU-S2-300RE
22218	3-7/16	TP50	TPHU150	070821	TPHU-S2-307R	070839	TPHU-S2-307RE
22220	3-15/16	TP60	TPHU160	070823	TPHU-S2-315R	070841	TPHU-S2-315RE
22222	4-7/16	N/A	TPHU170	070825	TPHU-S2-407R	070843	TPHU-S2-407RE
22226	4-15/16	N/A	TPHU180	070827	TPHU-S2-415R	070845	TPHU-S2-415RE

Shaft Size	A	B	C	D	E	F	G	H	J	K	L	M
1-15/16	2.84	2.38	0.81	5.19	2.38	1.06	0.44	6.50	6.44	3.06	3.44	6.00
2												
2-3/16	2.94	2.75	0.81	6.25	3.00	1.44	0.56	7.50	7.63	3.50	3.75	7.00
2-7/16	3.20	2.75	0.81	7.14	3.33	1.44	0.56	8.50	8.28	3.84	4.06	8.00
2-11/16	3.59	2.75	0.81	7.13	3.31	1.44	0.56	8.50	8.50	4.00	4.70	8.00
2-15/16												
3												
3-7/16	4.00	3.13	0.81	8.41	4.09	1.56	0.69	9.50	10.06	4.50	5.50	9.00
3-15/16	4.47	3.13	0.81	9.25	4.56	1.56	0.69	11.00	11.50	5.50	6.00	10.50
4-7/16	6.53	3.38	0.81	10.19	5.00	1.56	0.69	11.00	12.38	6.00	6.45	10.50
4-15/16	6.91	3.50	0.81	12.44	6.06	1.81	0.69	14.38	14.63	7.19	7.45	13.88

See Page B19-20 Thru B19-25 For TP And TPHU Frames

Shaft Size	N	P	Q	R	S	T	U	V	W	X Total Exp	Y	Z
1-15/16	1.66	1.25	0.81	3.19	2.00	0.31	1.06	2.00	0.88	0.25	0.020	2.30
2												
2-3/16	1.94	1.75	1.06	3.39	2.02	0.31	1.56	2.25	0.94	0.25	0.025	2.59
2-7/16	1.88	1.75	1.06	3.53	2.16	0.31	1.44	2.75	1.00	0.25	0.025	2.94
2-11/16	1.94	1.75	1.06	3.83	2.45	0.31	1.50	2.75	1.00	0.25	0.025	3.47
2-15/16												
3												
3-7/16	2.53	2.25	1.31	4.22	2.66	0.31	1.78	3.13	0.97	0.25	0.025	4.05
3-15/16	2.50	2.31	1.31	4.52	2.95	0.31	2.00	3.13	1.25	0.31	0.025	4.50
4-7/16	2.44	2.31	1.31	5.45	3.45	0.38	1.94	4.00	0.86	0.38	0.036	5.00
4-15/16	2.38	3.94	1.31	5.88	3.66	0.38	1.94	4.45	1.42	0.38	0.036	5.84

See Page B19-20 Thru B19-25 For TP And TPHU Frames

DIMENSIONS

S-2000 Bearing Insert

CONTACT SEAL

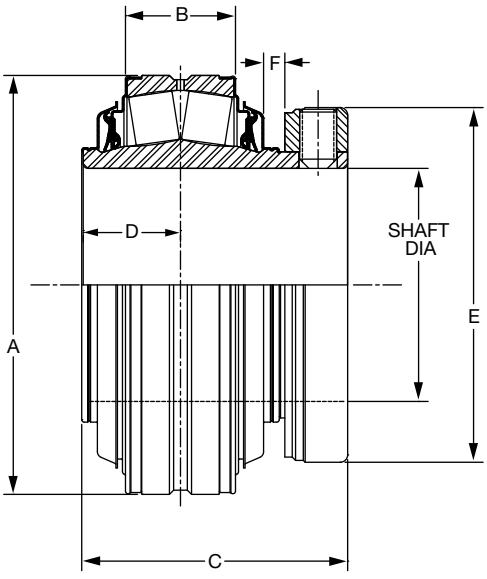

1-3/8 THRU 3-15/16" CONSTRUCTION

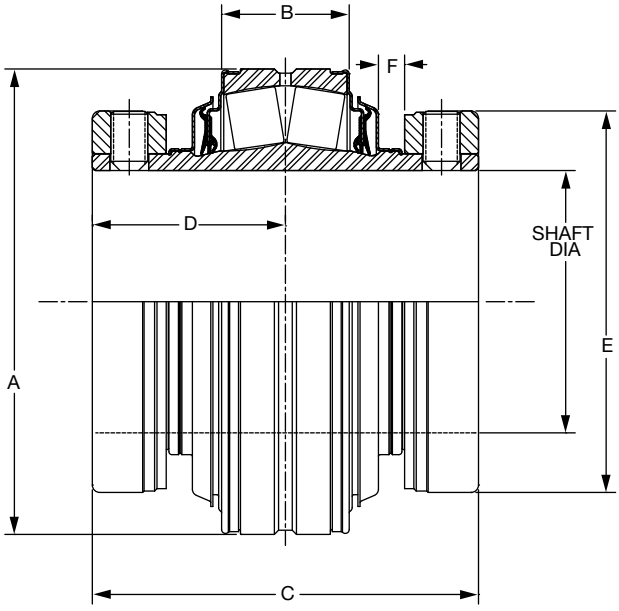

4-7/16 THRU 4-15/16" CONSTRUCTION

LABYRINTH SEAL

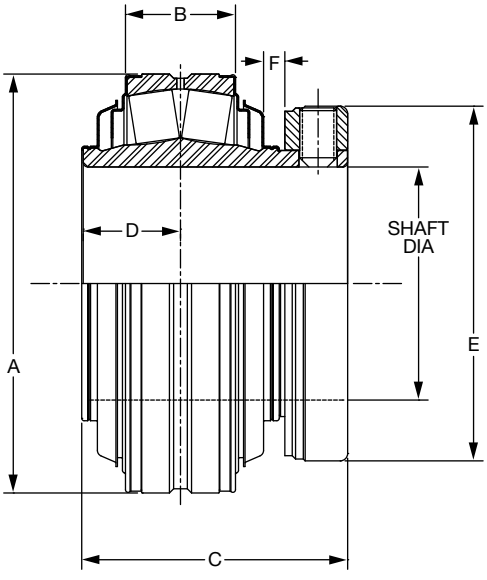

1-3/8 THRU 3-15/16" CONSTRUCTION

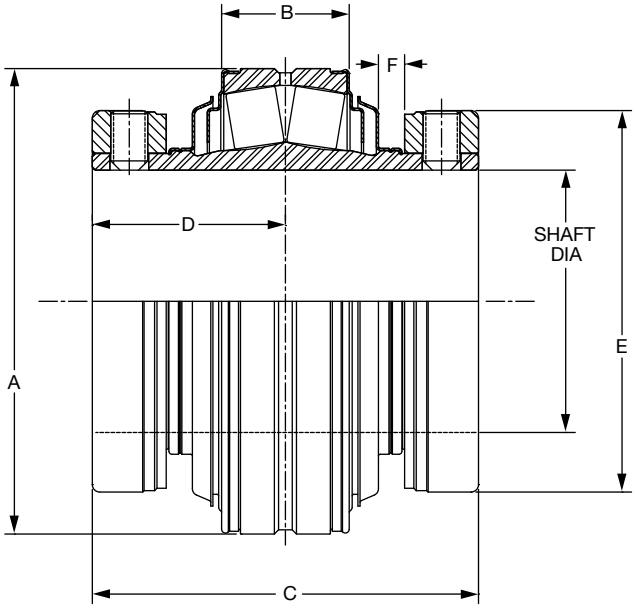

4-7/16 THRU 4-15/16" CONSTRUCTION

DIMENSIONS

DODGE



S-2000 Bearing Insert

Bearing	Shaft Size	TRIDENT Seal		Labyrinth Seal	
		Part Number	Part Name	Part Number	Part Name
22208	1-3/8	**070000**	INS-S2-106R	**070016**	INS-S2-106L
	1-7/16	**070001**	INS-S2-107R	**070017**	INS-S2-107L
	1-1/2	**070002**	INS-S2-108R	**070018**	INS-S2-108L
22209	1-11/16	**070003**	INS-S2-111R	**070019**	INS-S2-111L
	1-3/4	**070004**	INS-S2-112R	**070020**	INS-S2-112L
22210	1-15/16	**070005**	INS-S2-115R	**070021**	INS-S2-115L
	2	**070006**	INS-S2-200R	**070022**	INS-S2-200L
22211	2-3/16	**070007**	INS-S2-203R	**070023**	INS-S2-203L
22213	2-7/16	**070008**	INS-S2-207R	**070024**	INS-S2-207L
22215	2-11/16	**070009**	INS-S2-211R	**070025**	INS-S2-211L
	2-15/16	**070010**	INS-S2-215R	**070026**	INS-S2-215L
	3	**070011**	INS-S2-300R	**070027**	INS-S2-300L
22218	3-7/16	**070012**	INS-S2-307R	**070028**	INS-S2-307L
22220	3-15/16	**070013**	INS-S2-315R	**070029**	INS-S2-315L
22222	4-7/16	**070014**	INS-S2-407R	**070030**	INS-S2-407L
22226	4-15/16	**070015**	INS-S2-415R	**070031**	INS-S2-415L

Shaft Size	A	B	C	D	E
1-3/8 1-7/16 1-1/2	3.15	0.95	2.53	0.97	2.66
1-11/16 1-3/4	3.35	0.95	2.66	0.95	3.10
1-15/16 2	3.54	0.95	2.84	1.00	3.34
2-3/16	3.94	1.05	2.94	1.05	3.66
2-7/16	4.72	1.28	3.20	1.21	3.97
2-11/16 2-15/16 3	5.12	1.28	3.59	1.22	4.63
3-7/16	6.30	1.63	4.00	1.48	5.50
3-15/16	7.10	1.88	4.48	1.65	6.00
4-7/16	7.87	2.16	6.53	3.27	6.45
4-15/16	9.10	2.59	6.91	3.45	7.45

DIMENSIONS

Steel S-2000 Open End Covers



Shaft Size	Front End				Backside			
	S2000 & S2000-HD		E-S2000 & ES2000-HD		S2000 & S2000-HD		E-S2000 & ES2000-HD	
	Dodge Part No.	Description	Dodge Part No.	Description	Dodge Part No.	Description	Dodge Part No.	Description
1-3/8	**070240**	S2ECO-08-106	**070240**	S2ECO-08-106	**072503**	S2IPBECO-08-106	**072503**	S2IPBECO-08-106
1-7/16	**070241**	S2ECO-08-107	**070241**	S2ECO-08-107	**072504**	S2IPBECO-08-107	**072504**	S2IPBECO-08-107
1-1/2	**070242**	S2ECO-08-108	**070242**	S2ECO-08-108	**072505**	S2IPBECO-08-108	**072506**	ES2IPBECO-09-108
1-11/16	**070243**	S2ECO-09-111	**070243**	S2ECO-09-111	**072508**	S2IPBECO-09-111	**072508**	S2IPBECO-09-111
1-3/4	**070244**	S2ECO-09-112	**070244**	S2ECO-09-112	**072509**	S2IPBECO-09-112	**072510**	ES2IPBECO-10-112
1-15/16	**070245**	S2ECO-10-115	**070245**	S2ECO-10-115	**072512**	S2IPBECO-10-115	**072512**	S2IPBECO-10-115
2	**070246**	S2ECO-10-200	**070246**	S2ECO-10-200	**072513**	S2IPBECO-10-200	**072513**	S2IPBECO-10-200
2-3/16	**070247**	S2ECO-11-203	**070247**	S2ECO-11-203	**072514**	S2IPBECO-11-203	**072514**	S2IPBECO-11-203
2-7/16	**070178**	S2IPECO-13-207	**070178**	S2IPECO-13-207	**072518**	S2IPBECO-13-207	**072518**	S2IPBECO-13-207
2-11/16	**070248**	S2ECO-15-211	**070248**	S2ECO-15-211	**072520**	S2IPBECO-15-211	**072520**	S2IPBECO-15-211
2-15/16	**070249**	S2ECO-15-215	**070249**	S2ECO-15-215	**072522**	S2IPBECO-15-215	**072522**	S2IPBECO-15-215
3	**070250**	S2ECO-15-300	**070250**	S2ECO-15-300	**072523**	S2IPBECO-15-300	**072523**	S2IPBECO-15-300
3-7/16	**070186**	S2IPECO-18-307	**070186**	S2IPECO-18-307	**072526**	S2IPBECO-18-307	**072526**	S2IPBECO-18-307
3-15/16	**070189**	S2IPECO-20-315	**070189**	S2IPECO-20-315	**072529**	S2IPBECO-20-315	**072529**	S2IPBECO-20-315
4-7/16	**070191**	S2IPECO-22-407	**070191**	S2IPECO-22-407	**072532**	S2BECO-22-407	**072532**	S2BECO-22-407
4-15/16	**070193**	S2IPECO-26-415	**070193**	S2IPECO-26-415	**072535**	S2BECO-26-415	**072535**	S2BECO-26-415

DIMENSIONS

Steel S-2000 Closed End Covers



Shaft Size	S2000 & S2000-HD		E-S2000 & ES2000-HD	
	Dodge Part No.	Description	Dodge Part No.	Description
1-3/8 to 1-1/2	**069970**	S2EC08	**069960**	IPEC08
1-11/16 to 1-3/4	**069971**	S2EC09	**069961**	IPEC09
1-15/16 to 2	**069972**	S2EC10	**069962**	IPEC10
2-3/16	**069973**	S2EC11	**069963**	IPEC11
2-7/16	**069964**	S2EC13	**069964**	IPEC13
2-11/16 to 3	**069975**	S2EC15	**069965**	IPEC15
3-7/16	**069966**	S2IPEC18	**069966**	S2IPEC18
3-15/16	**069967**	S2IPEC20	**069967**	S2IPEC20
4-7/16	**069968**	S2IPEC22	**069968**	S2IPEC22
4-15/16	**069969**	S2IPEC26	**069969**	S2IPEC26

DIMENSIONS

S2000 End Cover

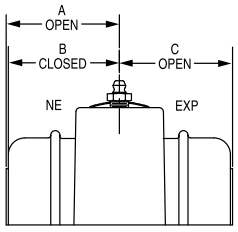

PILLOW BLOCK

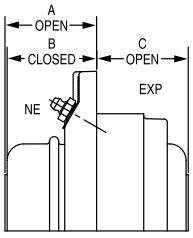

PILOTED FLANGE

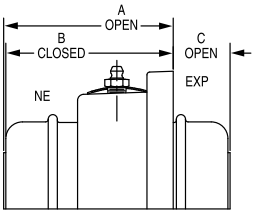

FLANGE

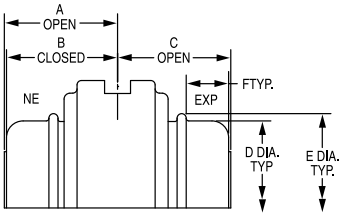

WS TAKE-UP

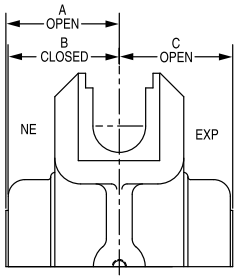

TPHU TAKE-UP

	Shaft Size	S2000 Pillow Block (2-Bolt)	S2000 Pillow Block (4-Bolt)	*E-S2000 Pillow Block (2-Bolt)	*E-S2000 Pillow Block (4-Bolt)	S2000 Piloted Flange	*E-S2000 Piloted Flange	S2000 Round Flange	S2000 Square Flange	*E-S2000 Square Flange	Wide Slot Take-Up	Top Angle Take-Up	D	E	F
A OPEN	1-3/8	2.03		2.03		1.67	1.67	3.12	3.45	3.45	2.06				
B CLOSED	1-7/16	1.97	N/A	1.97	N/A	1.61	1.61	3.06	3.39	3.39	2.00	N/A	2.94	3.19	0.75
C OPEN	1-1/2	2.11		2.11		2.46	2.46	0.99	0.99	1.20	2.10				
A OPEN		2.22		2.22		1.83	1.83	3.33	4.07	4.07	2.19				
B CLOSED	1-11/16	2.16	N/A	2.16	N/A	1.77	1.77	3.27	4.01	4.01	2.13	N/A	3.27	3.39	0.88
C OPEN		2.25		2.25		2.60	2.60	1.10	1.10	1.20	2.25				
A OPEN		2.22		2.22		1.83	1.83	3.33	4.07	4.07	2.19				
B CLOSED	1-3/4	2.16	N/A	2.16	N/A	1.77	1.77	3.27	4.01	4.01	2.13	N/A	3.27	3.39	0.88
C OPEN		2.25		2.25		2.60	2.60	1.10	1.10	1.20	2.25				
A OPEN	1-15/16	2.31	2.31	2.31		1.92	1.92	3.47	3.95	3.95	2.25	2.31			
B CLOSED	THRU	2.25	2.25	2.25	N/A	1.86	1.86	3.41	3.89	3.89	2.19	2.25	3.52	3.61	1.02
C OPEN	2	2.45	2.45	2.45		2.83	2.83	1.28	1.28	1.38	2.45	2.43			
A OPEN		2.47	2.47	2.47		2.00	2.00	3.69	4.53	4.53	2.42	2.47			
B CLOSED	2-3/16	2.41	2.41	2.41	N/A	1.94	1.94	3.63	4.47	4.47	2.36	2.40	3.77	3.95	1.03
C OPEN		2.54	2.54	2.54		3.00	3.00	1.32	1.32	1.40	2.54	2.54			
A OPEN		2.53	2.53	2.53	2.53	2.18	2.18	4.04	4.72	4.72	2.53	2.70			
B CLOSED	2-7/16	2.44	2.44	2.44	2.44	2.09	2.09	3.95	4.63	4.63	2.44	2.61	4.41	4.64	1.00
C OPEN		2.77	2.77	2.77	2.77	3.24	3.24	1.37	1.37	2.77	2.77	2.72			
A OPEN	2-11/16	2.65	2.65	2.65	2.65	2.29	2.29	4.18	5.06	5.06	2.70	2.73			
B CLOSED	2-15/16	2.56	2.56	2.56	2.56	2.20	2.20	4.09	4.97	4.97	2.61	2.64	4.92	5.06	1.22
C OPEN	3	3.06	3.06	3.06	3.06	3.54	3.54	1.66	1.66	1.69	3.06	3.06			
A OPEN		3.07	3.07	3.07	3.07	2.91	2.91		5.78	5.78	3.07	3.07			
B CLOSED	3-7/16	2.94	2.94	2.94	2.94	2.78	2.78	N/A	5.65	5.65	2.94	2.94	5.98	6.22	1.13
C OPEN		3.31	3.31	3.31	3.31	3.59	3.59		1.63	1.66	3.31	3.31			
A OPEN		3.49	3.49		3.49	3.32	3.32		7.17	7.17	3.52	3.61			
B CLOSED	3-15/16	3.36	3.36	N/A	3.36	3.19	3.19	N/A	7.04	7.04	3.39	3.48	6.67	6.91	1.38
C OPEN		3.80	3.80		3.80	4.13	4.13		1.94	1.38	3.80	3.83			
A OPEN			3.96		3.91	4.02	3.85			7.62	3.97	3.96			
B CLOSED	4-7/16	N/A	3.83	N/A	3.78	3.89	3.72	N/A	N/A	7.49	3.84	3.83	7.31	7.56	1.67
C OPEN			4.23		4.23	4.16	4.68			2.06	4.23	4.23			
A OPEN			4.49		4.46	4.24	4.08				4.49	4.49			
B CLOSED	5	N/A	4.36	N/A	4.33	4.11	3.95	N/A	N/A	N/A	4.36	4.36	8.44	8.69	1.91
C OPEN			4.69		4.69	4.91	5.37				4.69	4.68			

FEATURES/BENEFITS PAGE B12-2 | SPECIFICATION PAGE B12-4 | HOW TO ORDER/NOMENCLATURE PAGE B12-4 | SELECTIONS PAGE B12-7

CONTENTS

UNISPHERE II

Features / Benefits B13-2
Specifications B13-3
Nomenclature B13-3
Selection B13-4
Dimensions
- Pillow Block - Inch B13-12
- Flange Bearing - Inch B13-14
- Bearing Insert With Seal - Inch B13-16
- Plummer Block Bearing - Metric B13-18
- Flange Bearing - Metric B13-20
- Bearing Insert With Seal - Metric B13-21

Part Number Index INDEX-1
Key Word Index KEYWORD-1

FEATURES/BENEFITS

UNISPHERE II





Dimensionally comparable with ball bearings:

- Length through the bore
- Base-to-center height
- Footprint

Approximately five times the rating of a ball bearing

UNISPHERE II

- High capacity double row spherical bearings
- 2-bolt pillow blocks and 4-bolt flange bearings 1-7/16” to 4”, 40mm to 90mm.
- Same rolling elements and installation ready features as the S-2000 bearing.
- Ductile iron pillow block housing with 65,000 PSI tensile strength is 92% the strength of steel.
- DODGE “R” Seal provides contacting lip protection, crimped to the outer race; maintains sealing effectiveness at maximum misalignment.
- Springlok™ collar mount with 65 setscrew spacing for optimum clamping force.

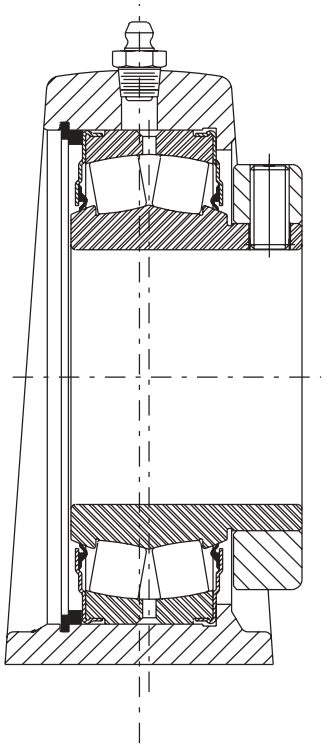

NOTE: Instruction manuals for Dodge bearings are available on www.dodge-pt.com



SPECIFICATION

UNISPHERE II
INCH

DODGE Unitized UNISPHERE II are general purpose, high-capacity, double-row spherical roller bearings. All are mounted in single piece precision machined housings. Bearings are mounted to shafts by means of set screw collars, with 65 degree set screw spacing for maximum clamping force.

ASTM A48 Class 30 cast iron is the standard material used in S-2000 housings and UNISPHERE II flanged housings. The standard material used in UNISPHERE II pillow blocks is ductile iron (ASTM A536 Grade 65-45-12) with 65,000 p.s.i. tensile strength. Housing designs are available for survival in extreme harsh environments, through the use of special finishes and stainless hardware.

Housings are available in a variety of standard configurations, including pillow blocks and flanges. Rubbing lip seals are standard on all units.



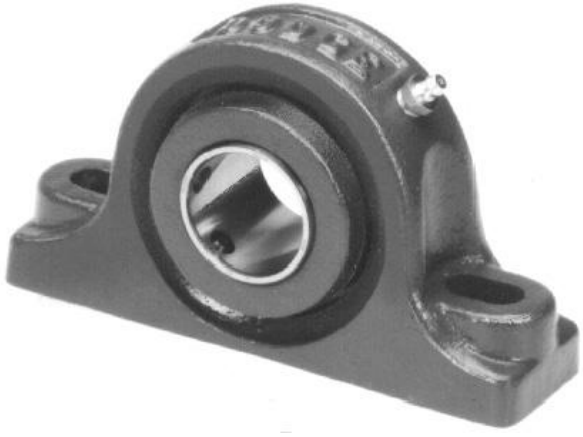

NOMENCLATURE

P2B - UN2 - 207 - R

HOUSING STYLE

P2B = Pillow Block 2-Bolt Base, Ductile Iron

F4B = Flange Bearing 4-Bolt, Cast Iron

BEARING TYPE

UN2 = UNISPHERE II

SIZE

Inches and 16th
2 = 2" and 07 = 7/16"
or 207 = 2-7/16"

SEAL

R = Single Lip Rubbing Seal

E = Expansion Type Bearing - If "E" Does Not Appear, Bearing Is Non-Expansion Type

M = Metric Bore

FEATURES/BENEFITS PAGE B13-2	NOMENCLATURE PAGE B13-3	SELECTION PAGE B13-4	DIMENSIONS PAGE B13-12

SELECTION



UNISPHERE II
SPHERICAL ROLLER BEARINGS

DODGE Unitized Spherical Roller Bearings have the capacity to carry heavy radial loads and combined radial and thrust loads. The maximum recommended load which can be applied is limited by various components in the system such as bearing, housing, shaft, shaft attachment, speed and life requirements as listed in this catalog. DODGE spherical roller bearings have been applied successfully even when these limits have been exceeded under controlled operating conditions. Contact DODGE Application Engineering (864-284-5700) for applications which exceed the recommendations of this catalog.

L_{10} Hours Life - The life which may be expected from at least 90% of a given group of bearings operating under identical conditions.

$$L_{10}\text{ Life, Hours} = \left(\frac{C}{P}\right)^{10/3} X \left(\frac{16667}{RPM}\right)$$

Where: C = Dynamic Capacity (Table 1 and Table 2 on pages B13-6 and B13-7) lbs.

P = Equivalent Radial Load, lbs.

GENERAL

Heavy Service - For heavy shock loads, frequent shock loads, or severe vibrations, add up to 50% (according to severity of conditions) to the Equivalent Radial Load to obtain a Modified Equivalent Radial Load. Consult DODGE Application Engineering for additional selection assistance.

Thrust load values shown in the table below are recommended as a guide for general applications that will give adequate L_{10} life. Spherical bearings require a radial load at least equal to the thrust load for proper operation. If the thrust load exceeds this limit, consult Application Engineering. Where substantial radial load is also present, it is advisable to calculate actual L_{10} life to assure that it meets the requirements. The effectiveness of the shaft attachment to carry thrust load depends on proper tightening of the set screws, shaft tolerance and shaft deflections. Therefore, it is advisable to use auxiliary thrust carrying devices such as shaft shoulder, snap ring or a thrust collar to locate the bearing under thrust loads heavier than shown below, or where extreme reliability is desired.

RPM	20-200	201 - 2000	Over 2000
RECOMMENDED THRUST LOAD	C/20	C/40	C/60

The shaft tolerances recommended below are adequate for normal radial and radial/thrust load applications. The radial load is limited by the attachment to the shaft (see Table 1 on page B13-6). Where the applied radial load (FR) exceeds this limit (maximum allowable slip fit radial load), a snug-to-light press fit of the shaft is required. Since the allowable load, especially at a low speed, is very large, the shaft should be checked to assure adequate shaft strength.

The magnitude and direction of both the thrust and radial load must be taken into account when selecting a housing. **When pillow blocks are utilized, heavy loads should be directed through the base. Where uplift loads are involved, see Table 7 on page B13-11 for maximum values.** Where a load pulls the housing away from the mounting base, both the hold-down bolts and housing must be of adequate strength. Auxiliary load carrying devices such as shear bars are advisable for side or end loading of pillow blocks and radial loads for flange units.

Shaft Tolerances	
Shaft Size	**S-2000**
UP TO 1-1/2"	+.0000 -.0005"
1-9/16 TO 4"	+.000 -.001"
4-7/16 TO 5"	+.000 -.0015"

BEARING SUPPORTING RADIAL LOADS ONLY

1. Define L_{10} Life Hours desired.
2. Establish bearing radial load, F_R

   (F_R = P for Pure Radial Load Conditions). The DODGE program BEST™★ can be used to find application loads.
3. Establish RPM.

Using the easy selection Table 3 on page B13-8 , find, under the RPM column, the equivalent radial load that equals or is slightly higher than the application radial load for the desired life. The shaft size on the far left will be the minimum shaft size that you can use for your application.

If the desired life is different than the values shown on the chart, use alternate Method A shown below.

Example: 1. L_{10} Life = 30,000 Hours
2. Radial load = 4000 lbs.
3. RPM = 1,020

At the intersection of the 1,020 RPM column and the 30,000 hours L_{10} life row, the equivalent radial load of 4092 lbs. exceeds the 4000 lbs, radial load for shaft size 2-7/16". A bearing with bore 2-7/16", or larger, may be used for this application.

★ The DODGE Bearing Evaluation and Selection Technique (BEST) is a menu driven computer program that calculates bearing loads, fatigue life and operating temperature for a two bearing shaft system based on user supplied input parameters. This interactive web based program is available at www.dodge-pt.com. Use PT Wizard on line under the tools drop down box.



UNISPHERE II

ALTERNATE METHOD A - SELECTING A BEARING FOR AN L_{10} LIFE VALUE NOT SHOWN IN THE EASY SELECTION CHART.

The L_{10} life equation can be rearranged so that the bearing dynamic capacity C is identified in terms of L_{10}, RPM and P

$$C = \left(\frac{L_{10} \times RPM}{16667} \right)^{0.3} \times P$$

(P = F_R for Pure Radial Load Conditions)

Since the L_{10}, RPM and P are known, solve for C. Select from the dynamic capacity column on Table 1 on page B13-6 the C value equal to or greater than the C value just calculated. The bore size on the far left represents the proper bore size selection. Check that the application RPM does not exceed the MAX. RPM on Table 1 and Table 2 on pages B13-6 and B13-7 . Also check that the radial load does not exceed the Maximum Allowable Slip Fit Radial Load shown on Table 1 and Table 2. If it does, a line-to-line to light press fit of shaft is required. When selecting an L_{10} life of less than 30,000 hours, particular attention must be paid to shaft deflection and proper lubricant selection.

SELECTING BEARINGS SUPPORTING COMBINATION RADIAL AND THRUST LOADS

When a bearing supports both a radial load and a thrust load, the loading on the two rows is shared unequally depending on the ratio of thrust to radial load. The use of the X (radial factor) and Y (thrust factor) from Table 1 and Table 2 converts the applied thrust load and radial loads to an equivalent radial load having the same effect on the life of the bearing as a radial load of this magnitude.

The equivalent radial load $P = XF_R + YF_A$

Where:

P = Equivalent radial load, lbs.
F_R = Radial load, lbs. (see Table 1 for allowable slip fit maximum load)
F_A = Thrust (axial) load, lbs.
e = Thrust load to radial load factor (Table 1 and Table 2)★
X = Radial load factor (Table 1 and Table 2)★
Y = Thrust load factor (Table 1 and Table 2)★

To find X and Y, calculate F_A/F_R and compare to **e** for the selected bore size. Determine X and Y from Table 1 and Table 2 on pages B13-6 and B13-7 depending on whether F_A/F_R is equal to or less than **e**, or F_A/F_R is greater than **e**. Substitute all known values into the equivalent radial load equation. P (equivalent radial load) can be used in the life formula to determine L_{10}, or it can be compared to the allowable equivalent radial load ratings for the speed and hours life desired in the easy selection Table 3 on page B13-8 or Table 4 on page B13-9.

SELECTING BEARINGS SUPPORTING ONLY THRUST LOADS

Spherical Roller Bearings generally are not recommended for pure thrust load applications. However, they will perform satisfactorily under very light pure thrust loads. Consult DODGE Application Engineering (864-284-5700).

SELECTING LUBRICATION

DODGE UNISPHERE II spherical roller bearings are lubricated at the factory with Mobilgrease XHP222 grease. Mobilgrease XHP222 is a superior industrial grease using a lithium complex thickener and highly refined base oil. This grease will adequately handle low and medium speeds with low and medium loads at normal temperatures as defined on Table 6 on page B13-10. For very low and high speeds, for heavy loads and for low and high temperatures, special greases must be used. Contact DODGE Application Engineering (864-284-5700). DODGE engineers will recommend bearings and lubricants for the above unusual conditions. DODGE also has the expertise to custom design and build special bearings for your needs. The only maintenance requirement for DODGE Unitized roller bearings is periodic relubrication at regular intervals as outlined in the appropriate instruction manuals.

MISALIGNMENT CONSIDERATIONS

In nearly all applications, good design practice requires two bearings supporting the shaft. In cases where three or more bearings are installed, unless precautions are taken to line the bearings up both vertically and horizontally, it is possible to induce heavy loads. In the case of two bearings, alignment is not as critical, especially with DODGE Unitized Spherical Roller Bearings. UNISPHERE II bearings are designed to allow a maximum of ±1° of static and dynamic misalignment. However, for optimum seal performance, misalignment should be kept under ±0.5°. To ensure good alignment, mounting surfaces must be checked for flatness and must lie in the same plane. When tightening base bolts, each bolt should be alternately tightened in incremental torque values until full torque is achieved to prevent the angular shifting of the pillow block that occurs when one bolt is tightened to its full torque. Shimming may be required to minimize misalignment.

FEATURES/BENEFITS PAGE B13-2	SPECIFICATION PAGE B13-3	NOMENCLATURE PAGE B13-3	DIMENSIONS PAGE B13-12

SELECTION



UNISPHERE II

Table 1: UNISPHERE II Spherical Roller Bearings Radial And Thrust Factors

Shaft Size Inch	Basic Bearing Description	e	$F_A/F_R \le e$		$F_A/F_R \ge e$		Max. Allow. Slip Fit Radial Load F_R* Lbs.	Dynamic Capacity (C) Lbs.	Static Capacity C_0	Maximum RPM
			X	Y	X	Y				
1-1/8 1-3/16 1-1/4 1-3/8 1-7/16 1-1/2	22208	0.28	1	2.4	0.67	3.6	3,750	20,800	21,000	3,000
1-5/8 1-11/16 1-3/4	22209	0.26	1	2.6	0.67	3.9	3,750	20,800	22,000	2,800
1-7/8 1-15/16 2	22210	0.24	1	2.8	0.67	4.2	4,000	22,000	24,000	2,625
2-3/16 2-1/4	22211	0.23	1	2.9	0.67	4.3	4,860	27,000	29,000	2,325
2-3/8 2-7/16 2-1/2	22213	0.24	1	2.8	0.67	4.2	6,840	39,000	47,500	1,900
2-11/16 2-3/4 2-15/16 3	22215	0.22	1	3.1	0.67	4.6	7,500	41,500	53,000	1,700
3-3/16 3-1/4 3-7/16 3-1/2	22218	0.23	1	2.9	0.67	4.3	11,500	65,500	81,500	1,400
3-11/16 3-15/16 4	22220	0.24	1	2.8	0.67	4.2	14,400	83,000	104,000	1,250

* If load exceeds “Max. allowable slip fit load,” line to line to light press fit of shaft required. Maximum slip fit radial loads apply if recommended shaft sizes are used.



UNISPHERE II

Table 2: UNISPHERE II Metric Spherical Roller Bearing

Shaft MM	Basic Bearing Description	e	$F_A/F_R \leq e$		$F_A/F_R \geq e$		Max. Allow. Slip Fit Radial Load F_R* kN	Dynamic Capacity (C) kN	Maximum RPM
			X	Y	X	Y			
30 35	22208	0.28	1	2.4	0.67	3.6	17	93	3000
40 45	22209	0.26	1	2.6	0.67	3.9	17	93	2800
50	22210	0.24	1	2.8	0.67	4.2	18	98	2625
55	22211	0.23	1	2.9	0.67	4.3	22	120	2325
60 65	22213	0.24	1	2.8	0.67	4.2	30	169	1900
70 75	22215	0.22	1	3.1	0.67	4.6	33	185	1700
80 85 90	22218	0.23	1	2.9	0.67	4.3	51	285	1400

* If load exceeds “Max. allowable slip fit load,” line to line to light press fit of shaft required. Maximum slop fit radial loads apply if recommended shaft sizes are used.

SELECTION

UNISPHERE II

Table 3: Easy Selection Table for UNISPHERE Double Row Spherical Roller Bearings

Shaft Size Inches	L_{10} Life Hours	Allowable Equivalent Radial Load Rating (lbs.) at Various Revolutions per Minute														
		50	100	150	250	500	870	1,020	1,250	1,400	1,700	1,900	2,325	2,625	2,800	3000
1-3/8 to 1-1/2	10,000	7,498	6,090	5,393	4,626	3,758	3,182	3,034	2,855	2,759	2,603	2,518	2,370	2,285	2,241	2,195
	30,000	5,393	4,380	3,878	3,327	2,703	2,289	2,182	2,053	1,984	1,872	1,811	1,704	1,643	1,612	1,579
	40,000	4,947	4,018	3,558	3,052	2,479	2,100	2,002	1,883	1,820	1,717	1,661	1,563	1,508	1,479	1,448
	60,000	4,380	3,558	3,150	2,703	2,195	1,859	1,773	1,668	1,612	1,521	1,471	1,384	1,335	1,309	1,282
	100,000	3,758	3,052	2,703	2,319	1,883	1,595	1,521	1,431	1,383	1,305	1,262	1,188	1,145	1,123	1,100
1-11/16 to 1-3/4	10,000	7,498	6,090	5,393	4,626	3,758	3,182	3,034	2,855	2,759	2,603	2,518	2,370	2,285	2,241	2,195
	30,000	5,393	4,380	3,878	3,327	2,703	2,289	2,182	2,053	1,984	1,872	1,811	1,704	1,643	1,612	1,579
	40,000	4,947	4,018	3,558	3,052	2,479	2,100	2,002	1,883	1,820	1,717	1,661	1,563	1,508	1,479	1,448
	60,000	4,380	3,558	3,150	2,703	2,195	1,859	1,773	1,668	1,612	1,521	1,471	1,384	1,335	1,309	1,282
	100,000	3,758	3,052	2,703	2,319	1,883	1,595	1,521	1,431	1,383	1,305	1,262	1,188	1,145	1,123	1,100
1-15/16 to 2	10,000	7930	6441	5704	4893	3975	3366	3209	3019	2918	2753	2663	2506	2417		
	30,000	5704	4633	4102	3519	2859	2421	2308	2172	2099	1980	1915	1803	1738		
	40,000	5232	4250	3763	3228	2622	2221	2117	1992	1925	1817	1757	1654	1595		
	60,000	4633	3763	3332	2859	2322	1966	1875	1764	1705	1608	1556	1464	1412		
	100,000	3975	3228	2859	2452	1992	1687	1608	1513	1463	1380	1335	1256	1211		
2-3/16	10,000	9,733	7,905	7,000	6,005	4,878	4,131	3,939	3,706	3,582	3,379	3,268	3,076			
	30,000	7,000	5,686	5,035	4,319	3,508	2,971	2,833	2,665	2,576	2,430	2,350	2,212			
	40,000	6,421	5,216	4,618	3,962	3,218	2,726	2,599	2,445	2,363	2,229	2,156	2,029			
	60,000	5,686	4,618	4,089	3,508	2,850	2,413	2,301	2,165	2,092	1,974	1,909	1,797			
	100,000	4,878	3,962	3,508	3,010	2,445	2,070	1,974	1,857	1,795	1,694	1,638	1,542			
2-7/16 2-1/2	10,000	14,058	11,419	10,111	8,674	7,046	5,967	5,689	5,352	5,173	4,881	4,721				
	30,000	10,111	8,213	7,272	6,239	5,068	4,292	4,092	3,850	3,721	3,510	3,395				
	40,000	9,275	7,534	6,671	5,723	4,649	3,937	3,753	3,531	3,413	3,220	3,114				
	60,000	8,213	6,671	5,907	5,068	4,116	3,486	3,324	3,127	3,022	2,851	2,758				
	100,000	7,046	5,723	5,068	4,348	3,531	2,991	2,851	2,683	2,593	2,446	2,366				
2-11/16 to 3	10,000	14,959	12,151	10,759	9,230	7,497	6,350	6,054	5,696	5,505	5,194					
	30,000	10,759	8,739	7,738	6,639	5,392	4,567	4,354	4,096	3,959	3,735					
	40,000	9,870	8,017	7,098	6,090	4,946	4,189	3,994	3,758	3,632	3,427					
	60,000	8,739	7,098	6,285	5,392	4,380	3,709	3,537	3,327	3,216	3,034					
	100,000	7,497	6,090	5,392	4,626	3,758	3,182	3,034	2,855	2,759	2,603					
3-7/16 3-1/2	10,000	23,611	19,178	16,981	14,569	11,833	10,022	9,555	8,989	8,689						
	30,000	16,981	13,793	12,213	10,478	8,511	7,208	6,872	6,465	6,249						
	40,000	15,577	12,653	11,203	9,612	7,807	6,612	6,304	5,931	5,732						
	60,000	13,793	11,203	9,920	8,511	6,913	5,855	5,582	5,251	5,076						
	100,000	11,833	9,612	8,511	7,302	5,931	5,023	4,789	4,505	4,355						
3-15/16 4	10,000	29,919	24,302	21,518	18,461	14,995	12,699	12,108	11,391							
	30,000	21,518	17,478	15,476	13,278	10,785	9,134	8,708	8,193							
	40,000	19,739	16,033	14,197	12,180	9,893	8,378	7,988	7,515							
	60,000	17,478	14,197	12,571	10,785	8,760	7,419	7,073	6,655							
	100,000	14,995	12,180	10,785	9,252	7,515	6,365	6,068	5,709							

In the light shaded area, a line-to-line to light press fit on the shaft is required.



UNISPHERE II

Table 4: Easy Selection Table for Metric UNISPHERE Double Row Spherical Roller Bearings

Shaft Size mm	L_{10} Life Hours	Allowable Equivalent Radial Load Rating (Newtons) at Various Revolutions per Minute														
		50	100	150	250	500	870	1,020	1,250	1,400	1,700	1,900	2,325	2,625	2,800	3000
30 35	10,000	33,365	27,101	23,997	20,587	16,722	14,162	13,502	12,703	12,278	11,584	11,204	10,545	10,168	9,973	9,769
	30,000	23,997	19,492	17,259	14,807	12,027	10,186	9,711	9,136	8,831	8,331	8,058	7,584	7,313	7,173	7,026
	40,000	22,013	17,880	15,832	13,583	11,032	9,343	8,908	8,381	8,101	7,642	7,392	6,957	6,709	6,580	6,445
	60,000	19,492	15,832	14,019	12,027	9,769	8,273	7,888	7,421	7,173	6,767	6,545	6,160	5,940	5,826	5,707
	100,000	16,722	13,583	12,027	10,318	8,381	7,098	6,767	6,367	6,154	5,806	5,615	5,285	5,096	4,998	4,896
40 45	10,000	33,350	27,089	23,986	20,578	16,715	14,156	13,496	12,697	12,273	11,578	11,198	10,540	10,164	9,969	
	30,000	23,986	19,483	17,251	14,800	12,021	10,181	9,707	9,132	8,827	8,327	8,054	7,581	7,310	7,170	
	40,000	22,003	17,872	15,825	13,576	11,027	9,339	8,904	8,377	8,097	7,639	7,388	6,954	6,705	6,577	
	60,000	19,483	15,825	14,012	12,021	9,764	8,270	7,884	7,418	7,170	6,764	6,542	6,158	5,937	5,824	
	100,000	16,715	13,576	12,021	10,313	8,377	7,095	6,764	6,364	6,151	5,803	5,613	5,283	5,094	4,996	
50	10,000	35,290	28,664	25,381	21,775	17,687	14,979	14,281	13,436	12,987	12,252	11,850	11,154	10,755		
	30,000	25,381	20,616	18,255	15,661	12,721	10,773	10,271	9,663	9,340	8,812	8,523	8,022	7,735		
	40,000	23,283	18,911	16,745	14,366	11,669	9,883	9,422	8,864	8,568	8,083	7,818	7,359	7,096		
	60,000	20,616	16,745	14,828	12,721	10,333	8,751	8,343	7,849	7,587	7,158	6,923	6,516	6,283		
	100,000	17,687	14,366	12,721	10,913	8,864	7,507	7,158	6,734	6,509	6,141	5,939	5,590	5,390		
55	10,000	43,291	35,163	31,136	26,712	21,697	18,375	17,519	16,482	15,931	15,030	14,536	13,682			
	30,000	31,136	25,290	22,394	19,212	15,605	13,216	12,600	11,854	11,458	10,810	10,455	9,841			
	40,000	28,561	23,199	20,542	17,623	14,315	12,123	11,558	10,874	10,511	9,916	9,591	9,027			
	60,000	25,290	20,542	18,189	15,605	12,675	10,735	10,234	9,629	9,307	8,780	8,492	7,993			
	100,000	21,697	17,623	15,605	13,388	10,874	9,209	8,780	8,261	7,984	7,533	7,286	6,857			
60 65	10,000	62,531	50,791	44,974	38,584	31,340	26,542	25,305	23,807	23,012	21,710	20,997				
	30,000	44,974	36,530	32,346	27,750	22,540	19,089	18,200	17,123	16,551	15,614	15,102				
	40,000	41,255	33,510	29,672	25,456	20,677	17,511	16,695	15,707	15,182	14,323	13,853				
	60,000	36,530	29,672	26,273	22,540	18,308	15,505	14,783	13,908	13,443	12,683	12,266				
	100,000	31,340	25,456	22,540	19,338	15,707	13,302	12,683	11,932	11,533	10,881	10,524				
70 75	10,000	66,539	54,047	47,857	41,057	33,349	28,243	26,927	25,334	24,487	23,101					
	30,000	47,857	38,872	34,420	29,529	23,985	20,313	19,367	18,221	17,611	16,615					
	40,000	43,900	35,658	31,574	27,088	22,002	18,634	17,765	16,714	16,155	15,241					
	60,000	38,872	31,574	27,957	23,985	19,482	16,499	15,731	14,800	14,305	13,496					
	100,000	33,349	27,088	23,985	20,577	16,714	14,155	13,496	12,697	12,272	11,578					
80 85 90	10,000	105,020	85,303	75,533	64,801	52,635	44,577	42,499	39,984	38,648						
	30,000	75,533	61,352	54,325	46,606	37,856	32,061	30,567	28,758	27,796						
	40,000	69,287	56,279	49,833	42,753	34,726	29,410	28,039	26,380	25,498						
	60,000	61,352	49,833	44,126	37,856	30,749	26,041	24,828	23,358	22,578						
	100,000	52,635	42,753	37,856	32,477	26,380	22,341	21,300	20,040	19,370						

In the light shaded area, a line-to-line to light press fit on the shaft is required.

FEATURES/BENEFITS PAGE B13-2	SPECIFICATION PAGE B13-3	NOMENCLATURE PAGE B13-3	DIMENSIONS PAGE B13-12

SELECTION

UNISPHERE II

Table 5: UNISPHERE II Maximum Axial Expansion - Inch And Metric

Bore Size Inches	Maximum Expansion Inches	Bore Size mm	Maximum Expansion mm
1-7/16 to 1-1/2	5/32	-	-
1-11/16 to 1-3/4	5/32	40, 45	3.9
1-15/16 to 2	5/32	50, 55	3.9
2-3/16	5/32	60, 65	4.7
2-7/16 to 2-1/2	3/16	70, 75	4.7
2-11/16 to 3	3/16	80, 85, 90	4.7
3-7/16 to 3-1/2	3/16		
3-15/16 to 4	7/32		

Table 6: Definition Of Operating Conditions For Unitized Spherical Roller Bearings

LOW SPEED	UP TO 20% OF MAX. RPM (TABLE 1)
MEDIUM SPEED	OVER 20% TO 80% OF MAX. RPM
HIGH SPEED	OVER 80% OF MAX. RPM
LIGHT LOAD	UP TO 8% OF **C** (TABLE 1)
NORMAL LOAD	OVER 8% TO 18% OF **C**
HEAVY LOAD	OVER 18% OF **C**
	C = DYNAMIC CAPACITY
LOW TEMPERATURE	20°F TO -100°F
MEDIUM TEMPERATURE	OVER 20°F TO 200°F
HIGH TEMPERATURE	OVER 200°F TO 400°F



UNISPHERE II

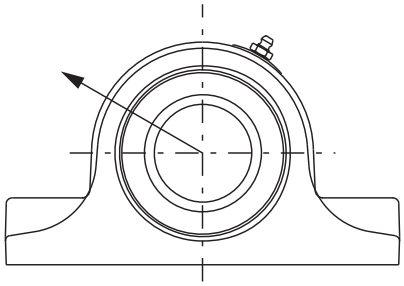

120°

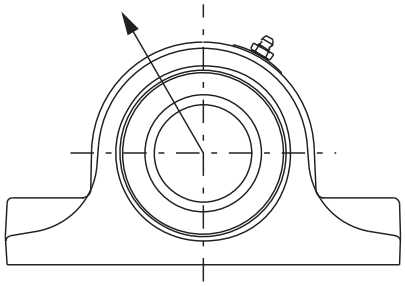

150°

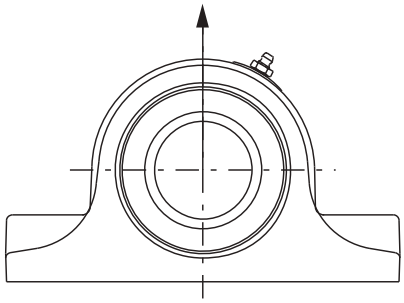

180°

Table 7: UNISPHERE II Housing Ratings, Ductile*

Bore Size	Pillow Block Designation	Max. Recommended Housing Cap Loads		
		P120 lb	P150 lb	P180 lb
1-1/8 to 1-1/2	UN2107	5500	6750	8000
1-5/8 to 1-3/4	UN2111	6800	8600	10000
1-7/8 to 2	UN2115	8000	9900	11700
2-3/16 to 2-1/4	UN2203	10200	12500	14800
2-3/8 to 2-1/2	UN2207	10200	12400	14900
2-11/16 to 3	UN2215	12900	15900	18900
3-3/16 to 3-1/2	UN2307	11900	14600	17400
3-11/16 to 4	UN2315	16900	20800	24600

* When utilizing heavy cap loads on pillow block housings, the installation must adhere to the following procedures:

1. The pillow block base bolts must be on **high strength (Grade 8) bolts and properly tightened** to mounting structure
2. Stop bars (shear strips) should be used against the plummer block where side loads are encountered.
3. In all cases where loads are heavy, the L_{10} life of the bearing should be checked for proper selection and life requirements

Table 8: Metric UNISPHERE II Housing Ratings, Ductile*

Plummer Block Designation	Max. Recommended Housing Cap Loads		
	P120 kN	P150 kN	P180 kN
UN2040M	31	37	44
UN2045M	31	37	44
UN2050M	35	44	52
UN2055M	45	55	65
UN2060M	45	55	66
UN2065M	45	55	66
UN2070M	57	70	84
UN2075M	57	70	84
UN2080M	53	65	77
UN2085M	53	65	77
UN2090M	53	65	77

* When utilizing heavy cap loads on plummer block housings, the installation must adhere to the following procedures:

1. The plummer block base bolts must be of **high strength (Grade 10.9) and properly tightened** to mounting structure.
2. Stop bars (shear strips) should be used against the plummer block where side loads are encountered.
3. In all cases where loads are heavy, the L_{10} life of the bearing should be checked for proper selection and life requirements.

NOTE: To convert kN to pounds-force, multiply kN by a factor of 225.

FEATURES/BENEFITS PAGE B13-2	SPECIFICATION PAGE B13-3	NOMENCLATURE PAGE B13-3	DIMENSIONS PAGE B13-12

DIMENSIONS

UNISPHERE II Pillow Block - Inch

NOTE: All sizes use a 1/8-27 NPT hydraulic grease fitting

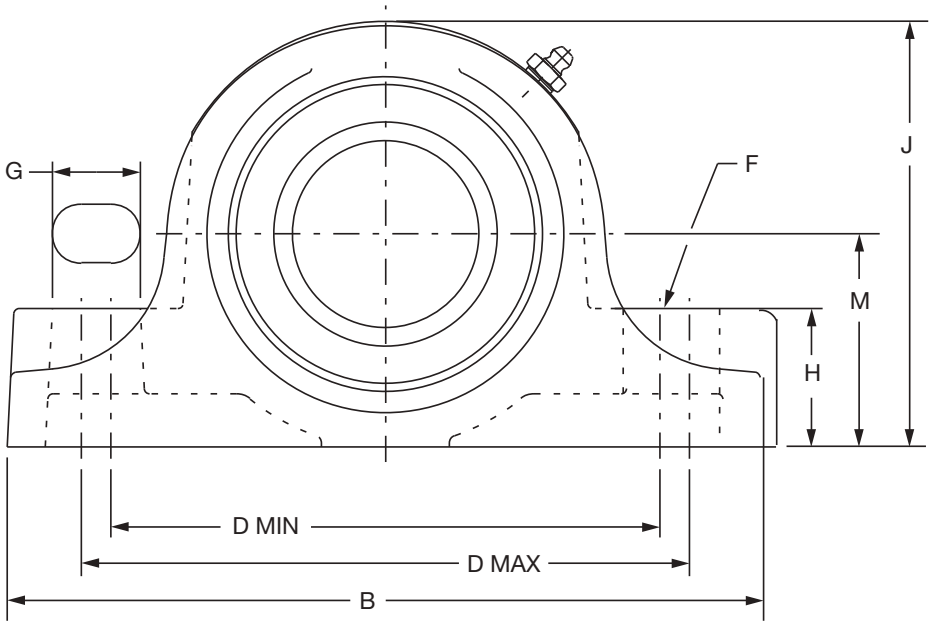

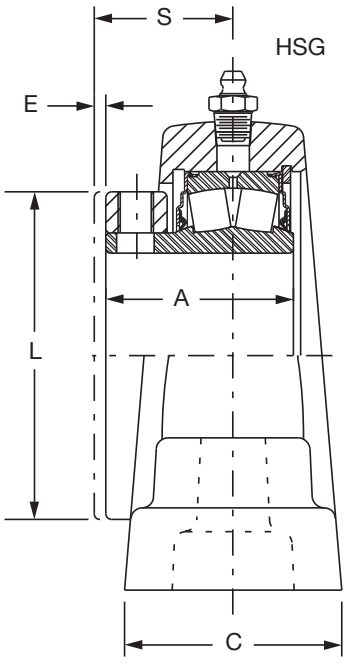

EXPANSION

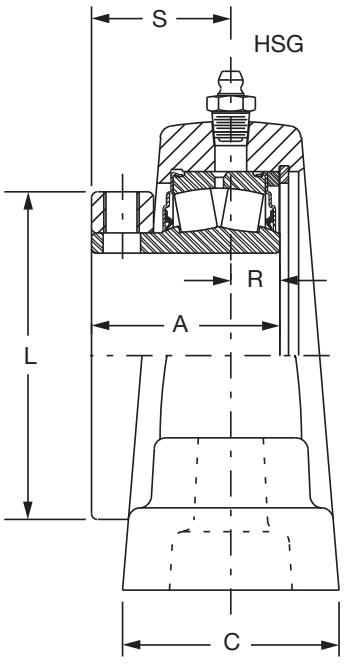

NON-EXPANSION

DIMENSIONS



UNISPHERE II Pillow Block - Inch

Bearing	Shaft Size Inch Δ	Non-Expansion*		Expansion		Approx. Wt. Lbs.
		Part No.	Part Name	Part No.	Part Name	
22208	1-7/16	**048000**	P2B-UN2-107	**048017**	P2B-UN2-107E	5.5
	1-1/2	**048001**	P2B-UN2-108	**048018**	P2B-UN2-108E	5.4
22209	1-11/16	**048002**	P2B-UN2-111	**048019**	P2B-UN2-111E	6.9
	1-3/4	**048003**	P2B-UN2-112	**048020**	P2B-UN2-112E	6.8
22210	1-15/16	**048004**	P2B-UN2-115	**048021**	P2B-UN2-115E	8.0
	2	**048005**	P2B-UN2-200	**048022**	P2B-UN2-200E	7.6
22211	2-3/16	**048006**	P2B-UN2-203	**048023**	P2B-UN2-203E	9.8
22213	2-7/16	**048007**	P2B-UN2-207	**048024**	P2B-UN2-207E	13.6
	2-1/2	**048008**	P2B-UN2-208	**048025**	P2B-UN2-208E	13.4
22215	2-11/16	**048009**	P2B-UN2-211	**048026**	P2B-UN2-211E	19.3
	2-3/4	**048010 †**	P2B-UN2-212	**048027 †**	P2B-UN2-212E	19.0
	2-15/16	**048011**	P2B-UN2-215	**048028**	P2B-UN2-215E	18.2
	3	**048012**	P2B-UN2-300	**048029**	P2B-UN2-300E	18.1
22218	3-7/16	**048013**	P2B-UN2-307	**048030**	P2B-UN2-307E	28.4
	3-1/2	**048014 †**	P2B-UN2-308	**048031 †**	P2B-UN2-308E	27.0
22220	3-15/16	**048015**	P2B-UN2-315	**048032**	P2B-UN2-315E	37.4
	4	**048016 †**	P2B-UN2-400	**048033 †**	P2B-UN2-400E	37.0

† Assembled to order. Consult DODGE for delivery.

Δ Consult DODGE for sizes not listed.

* Furnished unless otherwise specified.

UNISPHERE II - Pillow Block - Dimensions ●

Shaft Size Inch	A	B	C	D		E Total Exp.	F Bolt Dia.	G	H	J	L	M	R	S
				Min.	Max.									
1-7/16 1-1/2	1.69	6.88	1.95	4.69	5.50	5/32	1/2	0.97	0.97	3.88	2.75	1.88	0.50	1.19
1-11/16 1-3/4	1.91	7.38	2.06	5.19	5.88	5/32	1/2	0.91	1.31	4.25	3.00	2.13	0.47	1.44
1-15/16 2	1.91	8.38	2.06	5.94	6.69	5/32	5/8	1.06	1.38	4.56	3.25	2.25	0.47	1.44
2-3/16	2.00	8.88	2.31	6.44	7.13	5/32	5/8	1.03	1.63	5.00	3.50	2.50	0.52	1.48
2-7/16 2-1/2	2.20	9.25	2.56	6.81	7.44	3/16	5/8	1.00	1.75	5.69	4.06	2.75	0.66	1.55
2-11/16 2-3/4 2-15/16 3	2.45	10.44	2.56	7.81	8.44	3/16	3/4	1.13	2.25	6.44	4.72	3.25	0.77	1.69
3-7/16 3-1/2	2.86	13.00	2.81	9.25	10.75	3/16	7/8	1.69	2.25	7.50	5.50	3.75	0.94	1.91
3-15/16 4	3.33	14.25	3.31	10.00	11.88	7/32	1	2.00	2.50	8.44	6.47	4.13	1.13	2.19

● Dimensions shown are for non-expansion units. The expansion bearing center and housing center are on the same centerline.

FEATURES/BENEFITS PAGE B13-2	SPECIFICATION PAGE B13-3	NOMENCLATURE PAGE B13-3	SELECTION PAGE B13-4

DIMENSIONS

UNISPHERE II Flange Bearing - Inch
4-BOLT

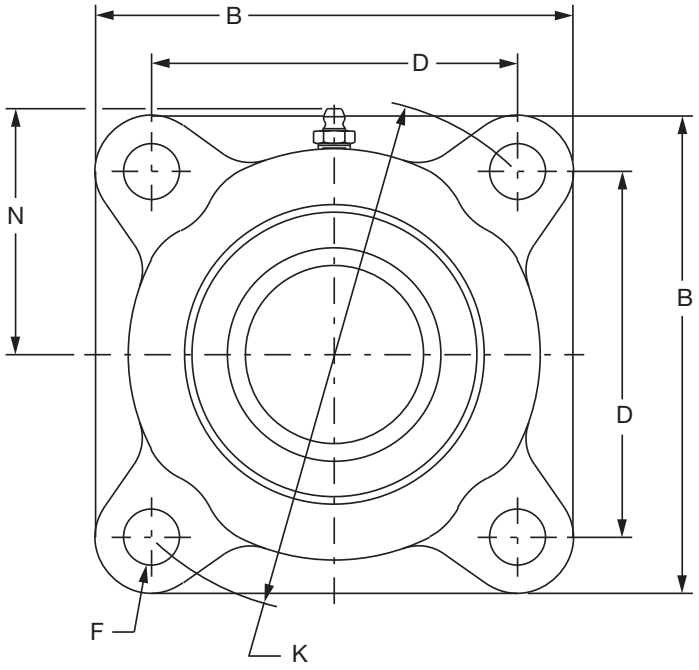

NOTE: All sizes use a 1/8-27 NPT hydraulic grease fitting

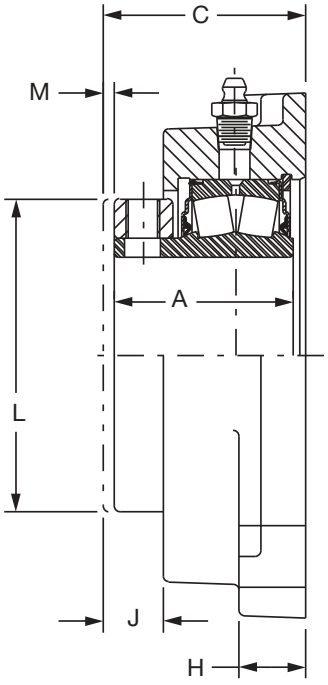

EXPANSION

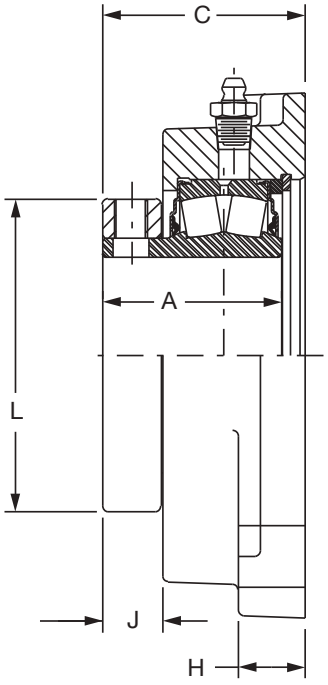

NON-EXPANSION

FEATURES/BENEFITS PAGE B13-2	SPECIFICATION PAGE B13-3	NOMENCLATURE PAGE B13-3	SELECTION PAGE B13-4

DIMENSIONS



UNISPHERE II Flange Bearing - Inch 4-BOLT

Bearing	Shaft Size Inch Δ	Non-Expansion*		Expansion		Approx. Wt. Lbs.
		Part No.	Part Name	Part No.	Part Name	
22208	1-7/16	**048034**	F4B-UN2-107	**048051**	F4B-UN2-107E	5.20
	1-1/2	**048035**	F4B-UN2-108	**048052**	F4B-UN2-108E	5.10
22209	1-11/16	**048036**	F4B-UN2-111	**048053**	F4B-UN2-111E	6.70
	1-3/4	**048037**	F4B-UN2-112	**048054**	F4B-UN2-112E	6.70
22210	1-15/16	**048038**	F4B-UN2-115	**048055**	F4B-UN2-115E	6.90
	2	**048039**	F4B-UN2-200	**048056**	F4B-UN2-200E	6.70
22211	2-3/16	**048040**	F4B-UN2-203	**048057**	F4B-UN2-203E	8.40
22213	2-7/16	**048041**	F4B-UN2-207	**048058**	F4B-UN2-207E	10.50
	2-1/2	**048042**	F4B-UN2-208	**048059**	F4B-UN2-208E	10.40
22215	2-11/16	**048043**	F4B-UN2-211	**048060 †**	F4B-UN2-211E	17.30
	2-3/4	**048044**	F4B-UN2-212	**048061 †**	F4B-UN2-212E	17.00
	2-15/16	**048045**	F4B-UN2-215	**048062**	F4B-UN2-215E	16.20
	3	**048046**	F4B-UN2-300	**048063**	F4B-UN2-300E	15.90
22218	3-7/16	**048047**	F4B-UN2-307	**048064**	F4B-UN2-307E	24.70
	3-1/2	**048048 †**	F4B-UN2-308	**048065 †**	F4B-UN2-308E	30.00
22220	3-15/16	**048049**	F4B-UN2-315	**048066**	F4B-UN2-315E	41.40
	4	**048050**	F4B-UN2-400	**048067 †**	F4B-UN2-400E	41.00

† Assembled to order. Consult DODGE for delivery.

Δ Consult DODGE for sizes not listed.

* Furnished unless otherwise specified.

UNISPHERE II 4-BOLT FLANGE DIMENSIONS ●

Shaft Size Inch	A	B	C	D	F Bolt Dia.	H	J	K	L	M Total Exp.	N
1-7/16 1-1/2	1.69	4.75	1.91	3.53	1/2	0.75	0.56	5.00	2.75	5/32	2.44
1-11/16 1-3/4	1.91	5.13	2.16	3.91	1/2	0.75	0.72	5.50	3.00	5/32	2.75
1-15/16 2	1.91	5.31	2.17	4.06	1/2	0.69	0.70	5.75	3.25	5/32	2.88
2-3/16	2.00	5.88	2.27	4.50	5/8	0.75	0.67	6.38	3.50	5/32	3.06
2-7/16 2-1/2	2.20	6.13	2.44	4.78	5/8	1.00	0.63	6.75	4.06	3/16	3.38
2-11/16 2-3/4 2-15/16 3	2.45	7.19	2.59	5.56	3/4	0.94	0.78	7.88	4.72	3/16	3.81
3-7/16 3-1/2	2.86	8.34	3.08	6.72	3/4	1.19	0.86	9.50	5.50	3/16	4.31
3-15/16 4	3.33	9.47	3.69	7.63	7/8	1.06	1.05	10.75	6.47	7/32	4.69

● Dimensions shown are for non-expansion units.

DIMENSIONS

UNISPHERE II Bearing Insert With Seal - Inch

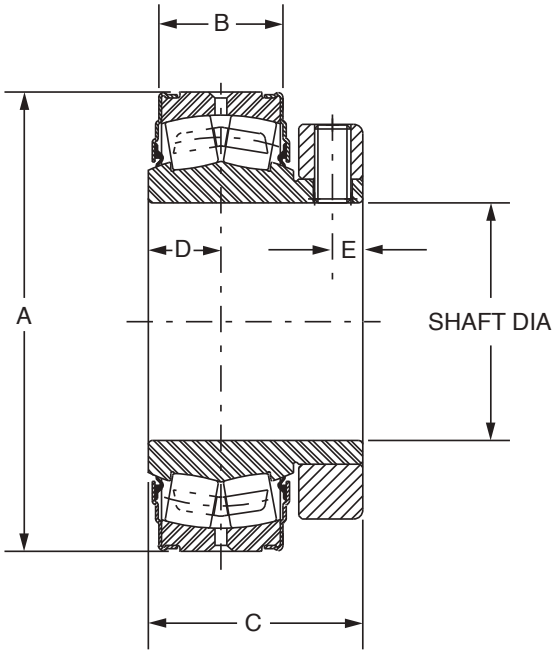

Bearing	Shaft Size Inch Δ	Part No. †	Part Name	Approx. Wt. Lbs.
22208	1-7/16	**421243**	BRG-UN2-107	1.5
	1-1/2	**421244**	BRG-UN2-108	1.4
22209	1-11/16	**421245**	BRG-UN2-111	1.6
	1-3/4	**421246**	BRG-UN2-112	1.5
22210	1-15/16	**421247**	BRG-UN2-115	1.8
	2	**421248**	BRG-UN2-200	1.7
22211	2-3/16	**421249**	BRG-UN2-203	2.3
22213	2-7/16	**421250**	BRG-UN2-207	4.1
	2-1/2	**421251**	BRG-UN2-208	3.9
22215	2-11/16	**421252**	BRG-UN2-211	5.6
	2-3/4	**421253**	BRG-UN2-212	5.4
	2-15/16	**421254**	BRG-UN2-215	4.8
	3	**421255**	BRG-UN2-300	4.6
22218	3-7/16	**421256**	BRG-UN2-307	9.2
	3-1/2	**421257**	BRG-UN2-308	8.6
22220	3-15/16	**421258**	BRG-UN2-315	12.4
	4	**421259**	BRG-UN2-400	12.1

† Assembled-to-order size. Consult DODGE for delivery.

Δ Consult DODGE for sizes not listed.



UNISPHERE II Bearing Insert With Seal - Inch

UNISPHERE II BEARING INSERT DIMENSIONS

Shaft Size Inch	A	B	C	D	E
1-7/16 1-1/2	3.1496	0.95	1.69	0.56	0.29
1-11/16 1-3/4	3.3465	0.95	1.91	0.58	0.32
1-15/16 2	3.5433	0.95	1.91	0.59	0.32
2-3/16	3.9370	1.03	2.00	0.64	0.32
2-7/16 2-1/2	4.7244	1.27	2.20	0.75	0.32
2-11/16 2-3/4 2-15/16 3	5.1181	1.27	2.45	0.80	0.44
3-7/16 3-1/2	6.2992	1.62	2.86	0.95	0.44
3-15/16 4	7.0866	1.86	3.33	1.09	0.51

FEATURES/BENEFITS PAGE B13-2	SPECIFICATION PAGE B13-3	NOMENCLATURE PAGE B13-3	SELECTION PAGE B13-4

DIMENSIONS

UNISPHERE II Plummer Block Bearing - Metric

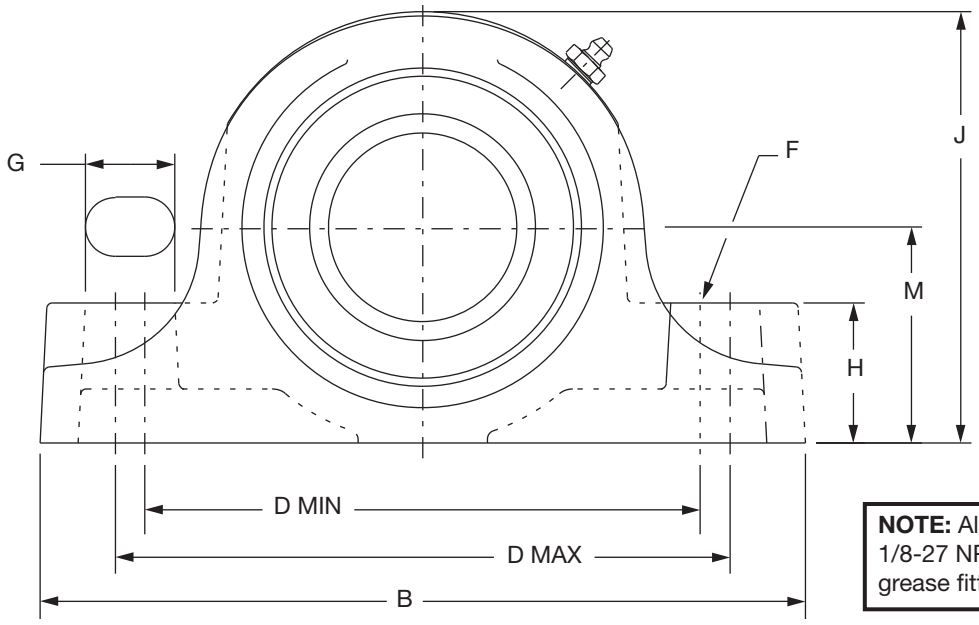

NOTE: All sizes use a 1/8-27 NPT hydraulic grease fitting

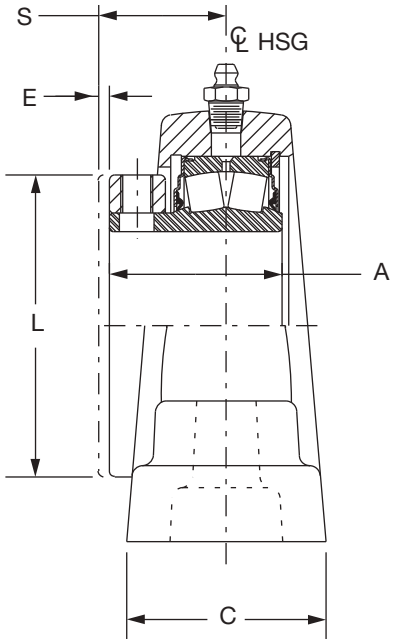

EXPANSION

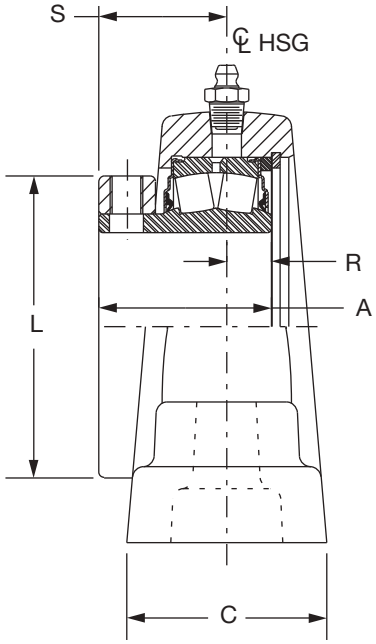

NON-EXPANSION

DIMENSIONS



UNISPHERE II Plummer Block Bearing - Metric

Bearing	Shaft Size Δ	Non-Expansion*		Expansion		Approximate Weight Kgs.
		Part No.	Part Name	Part No.	Part Name	
22210	50mm	**048109**	P2B-UN2-050M	**048124**	P2B-UN2-050ME	3.4
22211	55mm	**048110**	P2B-UN2-055M	**048125**	P2B-UN2-055ME	4.4
22213	60mm	**048111**	P2B-UN2-060M	**048126**	P2B-UN2-060ME	6.2
22215	70mm	**048113**	P2B-UN2-070M	**048128**	P2B-UN2-070ME	8.6
	75mm	**048114**	P2B-UN2-075M	**048129**	P2B-UN2-075ME	8.3
22218	80mm	**048115**	P2B-UN2-080M	**048130**	P2B-UN2-080ME	12.9
	85mm	**048116**	P2B-UN2-085M	**048131**	P2B-UN2-085ME	12.6

† Assembled to order. Consult DODGE for delivery.

Δ Consult DODGE for sizes not listed.

* Furnished unless otherwise specified.

METRIC UNISPHERE II - PLUMMER BLOCK - DIMENSIONS (MM) ●

Shaft Size	A mm	B mm	C mm	D		E Total Exp.	F Bolt Dia.	G mm	H mm	J mm	L mm	M mm	R mm	S mm
				Min.	Max.									
50mm	48	213	52	151	170	3.9	16	27	35	116	83	57.1	12	37
55mm	51	225	59	164	181	3.9	16	26	41	127	89	63.5	13	38
60mm	56	235	65	173	189	4.7	16	25	44	144	103	69.8	17	39
70mm 75mm	62	265	65	198	214	4.7	20	29	57	164	120	82.5	19	43
80mm 85mm	73	330	71	235	273	4.7	22	43	57	190	140	95.2	24	48

● Dimensions shown are for non-expansion units. The expansion bearing center and housing center are on the same centerline.

FEATURES/BENEFITS PAGE B13-2	SPECIFICATION PAGE B13-3	NOMENCLATURE PAGE B13-3	SELECTION PAGE B13-4

DIMENSIONS

UNISPHERE II Flange - Metric
4-BOLT

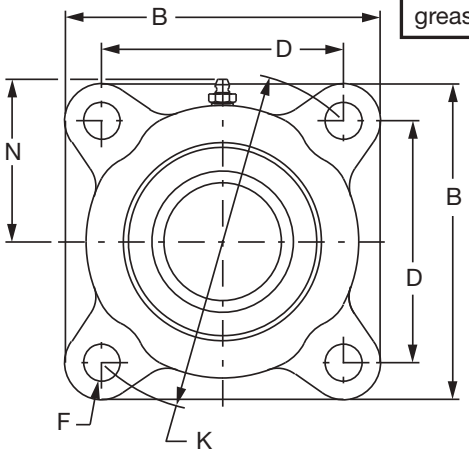

NOTE: All sizes use a 1/8-27 NPT hydraulic grease fitting

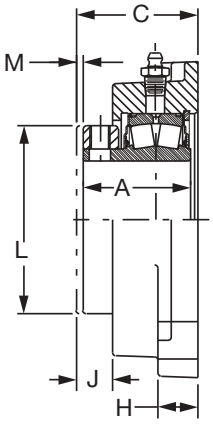

EXPANSION

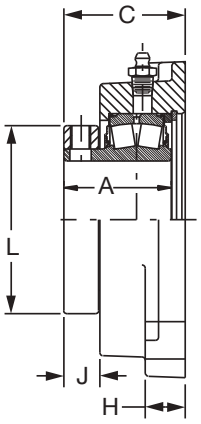

NON-EXPANSION

Bearing	Shaft Size Δ	Non-Expansion*		Expansion		Approx. Wt. Kgs.
		Part No.	Part Name	Part No.	Part Name	
22209	40mm	**048202**	F4B-UN2-040M	**048216**	F4B-UN2-040ME	3.1
	45mm	**048203**	F4B-UN2-045M	**048217**	F4B-UN2-045ME	3.1
22210	50mm	**048204**	F4B-UN2-050M	**048218**	F4B-UN2-050ME	3
22211	55mm	**048205**	F4B-UN2-055M	**048219**	F4B-UN2-055ME	3.8
22213	60mm	**048206**	F4B-UN2-060M	**048220**	F4B-UN2-060ME	4.8
	65mm	**048207**	F4B-UN2-065M	**048221**	F4B-UN2-065ME	4.6
22215	70mm	**048208**	F4B-UN2-070M	**048222**	F4B-UN2-070ME	8.2
22218	80mm	**048210**	F4B-UN2-080M	**048224**	F4B-UN2-080ME	11.2

Δ Consult DODGE for sizes not listed.

* Furnished unless otherwise specified.

METRIC UNISPHERE II - 4-BOLT FLANGE - DIMENSIONS (mm) ●

Shaft Size	A	B	C	D	F Bolt Dia.	H	J	K	L	M Total Exp.	N
40mm 45mm	48	130	55	99	12	19	18	140	76	3.9	70
50mm	48	135	55	103	12	18	18	146	82	3.9	73
55mm	51	149	58	114	16	19	17	162	89	3.9	78
60mm 65mm	56	156	62	121	16	25	16	171	103	3.9	86
70mm	62	183	66	141	20	24	20	200	120	4.7	97
80mm	73	212	78	171	20	30	22	241	140	4.7	109

● Dimensions shown are for non-expansion units.

FEATURES/BENEFITS PAGE B13-2	SPECIFICATION PAGE B13-3	NOMENCLATURE PAGE B13-3	SELECTION PAGE B13-4



UNISPHERE II Bearing Insert With Seal - Metric

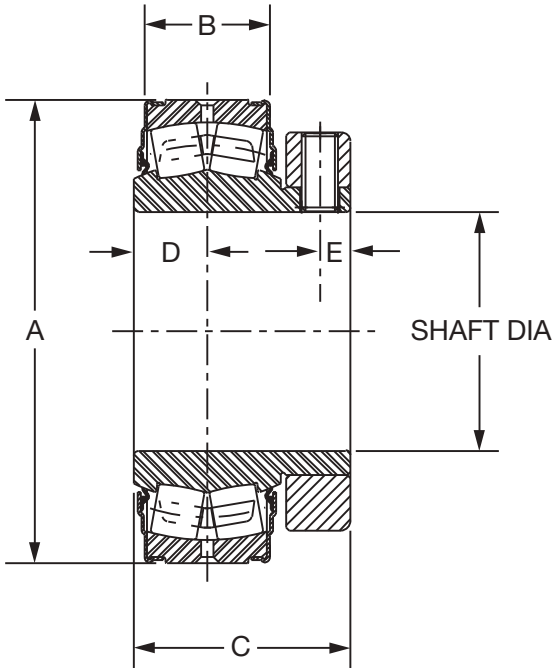

Bearing	UNISPHERE II Bearing Insert W/Seals Metric				UNISPHERE II Bearing Insert Dimensions-Metric					
	Shaft Size Δ	Part No.	Part Name	Approx. Wt. Kgs.	Shaft Size	A mm	B mm	C mm	D mm	E mm
22209	40mm	**421362**	BRG-UN2-040	0.80	40mm	85	24	48	14.7	7.26
	45mm	**421363**	BRG-UN2-045	0.70	45mm					
22210	50mm	**421364**	BRG-UN2-050	0.75	50mm	90	24	48	15.1	8.05
22211	55mm	**421365**	BRG-UN2-055	1.06	55mm	100	26	51	16.4	8.05
22213	60mm	**421366**	BRG-UN2-060	1.95	60mm	120	32.2	56	19.0	8.05
	65mm	**421367**	BRG-UN2-065	1.74	65mm					
22215	70mm	**421368**	BRG-UN2-070	2.37	70mm	130	32.3	62	20.2	11.2
	75mm	**421369**	BRG-UN2-075	2.09	75mm					
22218	80mm	**421370**	BRG-UN2-080	4.54	80mm	160	41.3	73	24.1	11.2
	85mm	**421371**	BRG-UN2-085	4.20	85mm					
	90mm	**421372**	BRG-UN2-090	3.90	90mm					

Δ Consult DODGE for sizes not listed.

NOTES



CONTENTS



IMPERIAL - IP, ISAF and ISN

Features And Benefits
- IMPERIAL . . . B14-2
- IMPERIAL-IP . . . B14-4
- IMPERIAL-HD . . . B14-6
- ISAF, ISAF HYD . . . B14-10
- ISN, ISNX HYD . . . B14-12

Specification
- IMPERIAL . . . B14-5
- IMPERIAL-HD . . . B14-7

How To Order / Nomenclature
- IMPERIAL . . . B14-8
- ISAF, ISAF HYD . . . B14-11
- ISN, ISNX HYD . . . B14-13

Selection
- IMPERIAL-IP, ISAF, HD, ISN, ISNX . . . B14-14
- IMPERIAL-IP and SAF Roller Bearing . . . B14-17

Dimensions
- IMPERIAL - IP Pillow Block, 2 Bolt . . . B14-30
- Steel IMPERIAL - HD Pillow Block, 2 Bolt . . . B14-38
- IMPERIAL - IP Pillow Block, 4 Bolt . . . B14-42
- Steel IMPERIAL - HD Pillow Block, 4 Bolt . . . B14-48
- IMPERIAL ISAF, 2 Bolt . . . B14-52
- IMPERIAL ISAF, 4 Bolt . . . B14-54
- ISAF Pillow Block Hydraulic . . . B14-60
- IMPERIAL - ISN Metric Pillow Block, 2 Bolt . . . B14-62
- ISNX Hydraulic . . . B14-64
- IMPERIAL - IP Flange - Round . . . B14-66
- IMPERIAL - IP Flange - Square . . . B14-70
- Steel IMPERIAL-HD Flange, 4 Bolt . . . B14-78
- IMPERIAL - IP Piloted Flange . . . B14-82
- Steel IMPERIAL - HD Piloted Flange . . . B14-90
- Steel IMPERIAL- HD Narrow Piloted Flange . . . B14-94
- IMPERIAL - IP Wide Slot Take-Up . . . B14-96
- IMPERIAL Bearing Insert . . . B14-100
- IMPERIAL ISAF - How to Order ISAF Smart Stock Selections . . . B14-103
- IMPERIAL Spanner Wrench . . . B14-104
- IMPERIAL Lockplate Kit . . . B14-105
- End Covers . . . B14-106

Part Number Index . . . INDEX-1
Keyword Index . . . KEYWORD-1

FEATURES/BENEFITS

IMPERIAL

Patented Adapter System Offers Quick Installation And Removal

The DODGE IMPERIAL bearing uses a thin wall push-pull adapter system that achieves clearance setting without the use of feeler gauges. The IMPERIAL bearing is installed by turning the locknut clockwise and removed by a counterclockwise rotation. Installation and removal of an IMPERIAL bearing can be accomplished in 15 minutes or less.

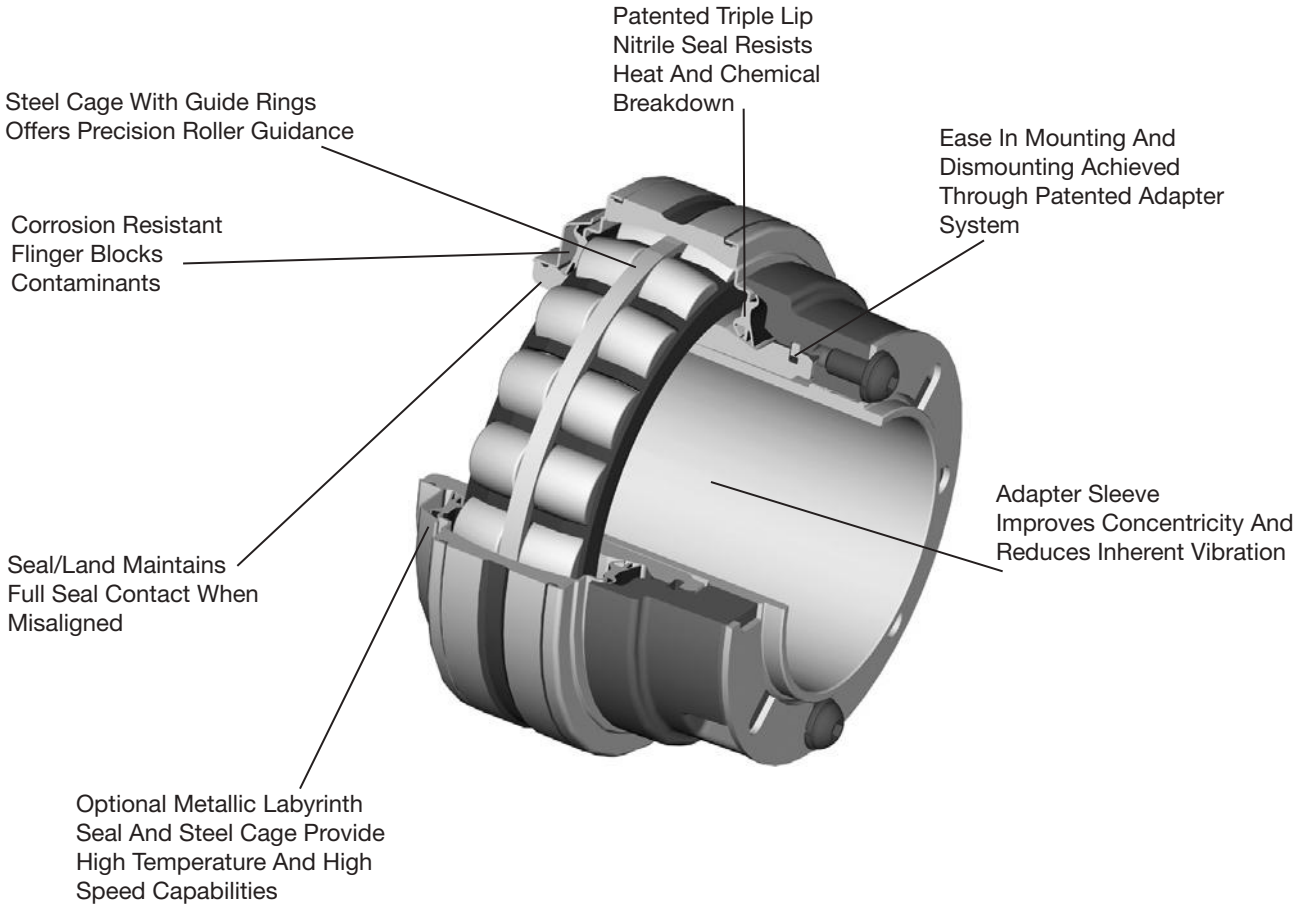

Installation and Removal Savings . . .

- Factory lubed, sealed and adjusted, ready to slip onto the shaft
- IMPERIAL adapter sleeve concentricity virtually eliminates fretting corrosion
- Field convertible from non-expansion to expansion and expansion to non-expansion
- Elongated pillow block bolt holes to facilitate mounting



IMPERIAL

IMPERIAL Bearings Offer Patented Seal Options To Maximize Bearing Life . . .

TRIDENT™ seals for low to medium speed

- Face rubbing triple lip seal
- Flinger to shield seal and bearing from contamination/damage
- Seal/land positive contact up to ±1 degree of misalignment
- Patented design

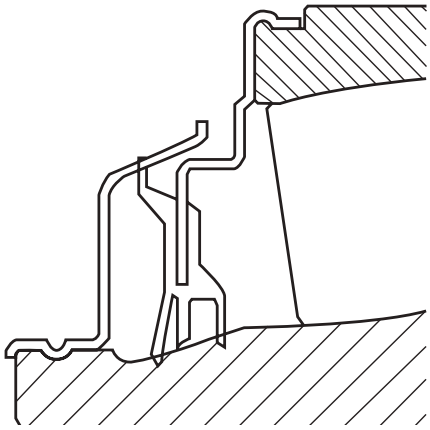

Labyrinth seals for higher speeds or high temperatures

- High speed for relatively clean or hot environments
- 15% increase in maximum speed over standard SAF adapter mounted sphericals of the same shaft size
- Flinger to shield seal and bearing from contamination/damage
- Seal operates up to ±1 degree of misalignment
- Patented design

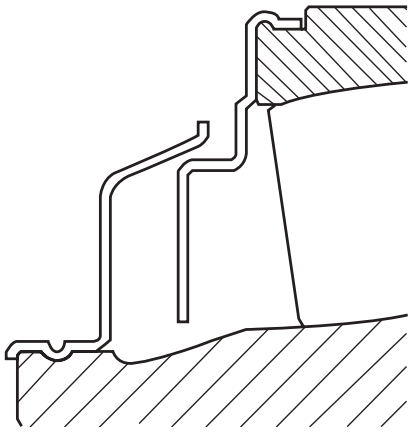

FEATURES/BENEFITS

IMPERIAL - IP



Flange IMPERIAL

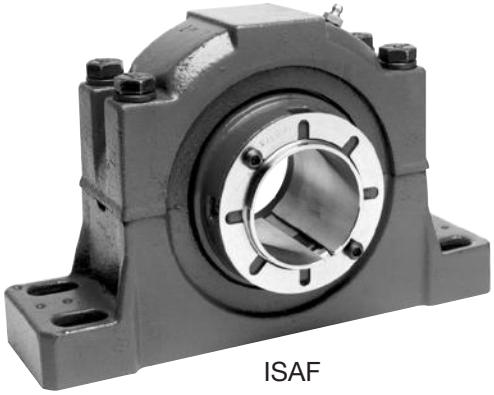

ISAF



Pillow Block IMPERIAL

- Push-pull adapter mount
- Grease limiting speeds 30% higher than setscrew mounts
- Same rolling element as the S-2000 bearing
- Pillow blocks are interchangeable with S-2000 dimensions on all sizes
- All housings are Class 30 Gray Iron
- 2 bolt pillow blocks, 4 bolt flange bearings piloted flange and take-ups 1-1/8” to 4” 4 bolt pillow blocks in sizes 2-3/8” to 5”
- Jackscrew holes standard on piloted flanges
- Can replace 300 series ball bearings in many applications
- Patented adapter mounting system
- Superior holding power reduces the fretting corrosion caused by vibration
- Shaft ready installation
- No special tools required for installation
- DODGE TRIDENT triple lip seal provides superior sealing system
- Seal/land on OD of inner ring maintains full contact pressure even when misaligned
- Less shaft damage vs. setscrew mounts
- Reduced vibration damage vs. setscrew mounts

NOTE: Instruction manuals for Dodge bearings available on www.dodge-pt.com



IMPERIAL
INCH

DODGE Spherical Bearings, including IMPERIAL bearings, are general-purpose, high-capacity, double-row spherical roller bearings. All IMPERIAL bearings are mounted in single-piece, precision-machined housings. Bearings are mounted to shafts by means of a patented adapter system that improves concentricity and reduces inherent vibration.

ASTM A48 Class 30 cast iron is the standard material used in IMPERIAL housings. Housing designs are available for survival in extremely harsh environments, through the use of special finishes and stainless hardware.

Housings are available in a variety of standard configurations, including pillow blocks, flanges, piloted flanges and take-up bearings. TRIDENT triple lip contact seals and Labyrinth seals are available on IMPERIAL bearings.



FEATURES/BENEFITS

Dodge IMPERIAL-HD

Dodge IMPERIAL-HD mounted bearings feature proven Dodge Imperial bearing insert technology deployed in steel housings designed specifically for harsh applications that demand superior housing strength. Major features include…

- Imperial patented push-pull adapter mounting system
- High capacity cast steel housing
- Same dimensions as cast iron Imperial products
- Also available in popular “Type E” dimensioned housings
- Proven, high capacity spherical rollers
- Effective sealing systems for tough applications
- Closed & shaft through end covers
- Sealed inserts that can be easily replaced in the field
- Field convertible between Expansion & Non-Expansion

IMPERIAL-HD

Two bolt pillow blocks – 1-1/8 to 4”

Four bolt pillow blocks – 2-3/8 to 5”

Four bolt square flange – 1-1/8 to 4”

Piloted flange – 1-1/8 to 5”

Narrow piloted “Edger” flange – 1-7/16 to 4-7/16”

“E” Dimensioned IMPERIAL-HD

Two bolt pillow blocks – 1-3/8 to 3-1/2”

Four bolt pillow blocks – 2-1/4 to 5”

Four bolt square flange – 1-3/8 to 4-1/2”







IMPERIAL-HD
INCH

DODGE Spherical Bearings, including IMPERIAL-HD bearings, are general-purpose, high-capacity, double-row spherical roller bearings. All IMPERIAL-HD bearings are mounted in single-piece, precision-machined housings. Bearings are mounted to shafts by means of a patented adapter system that improves concentricity and reduces inherent vibration.

ASTMA A-27 Grade 70-36 Class 1 steel is the standard material used in steel IMPERIAL HD housings. Housing designs are available for survival in extremely harsh environments, through the use of special finishes and stainless hardware.

Housings are available in a variety of standard configurations, including pillow blocks, flanges, piloted flanges and take-up bearings. TRIDENT triple lip contact seals and Labyrinth seals are available on IMPERIAL bearings.



NOMENCLATURE



How To Order

There are two ways to specify DODGE Bearings. Most of the product offerings have part numbers with listings shown throughout this catalog. Use of part numbers ensures accurate order processing.

When part numbers are not shown, the product may be specified by description or part name. This method is used when ordering units that include modifications or options. To order by description, use the nomenclature key shown on this page and add any special instructions to the end of the description for options not covered by the nomenclature.

DODGE Spherical Bearings are factory adjusted and pre-lubricated. For applications where extreme ambient temperatures, high speeds, or high loads are expected, a variety of specialty lubricants are available. Standard lubricant provided is Mobil Grease XHP 222, a lithium complex based grease. High temperature greases available upon request. Other special lubricants are also available upon request. Special lubricant options usually involve set-up charges, minimum quantities and list price premiums. To order, specify type of lubricant required at the end of the product name or after the standard part number.

Example: 071792 or 071650 except with Mobil Grease HTS #2 grease

or

SP2BIP108R except with Mobil Grease HTS #2 grease

For applications requiring modifications not listed, we encourage you to contact our Application Engineering Department for Bearings at 864-284-5700.

NOMENCLATURE



Imperial - IP

S E P2B - IP - 207 R E

	HOUSING STYLE	BEARING TYPE	SIZE	SEAL	OTHER DATA
S prefix denotes steel housing "HD" series					
E prefix denotes Type E dimensioned housing					
	P2B = Pillow Block 2 Bolt Base	IP = IMPERIAL	Inches and 16th 2 = 2" 07 = 7/16" 207 - 2-7/16"	R = TRIDENT Triple Lip Rubbing Seal	E = Expansion Type Bearing - If "E" Does Not Appear, Bearing Is Non-Expansion Type
	P4B = Pillow Block 4 Bolt Base			L = Labyrinth Metallic Seal	
	F3R = Flange Bearing 3 Bolt Cast Iron Round				
	F4R = Flange Bearing 4 Bolt Cast Iron Round				
	F4S = Flange Bearing 4 Bolt Base, Square				
	FC = Piloted Flanged (Flanged Cartridge)				
	FCN = Narrow Piloted Flange				
	WSTU = Wide Slot Take-up Bearing for use in Center Pull Frame				

FEATURES/BENEFITS

ISAF

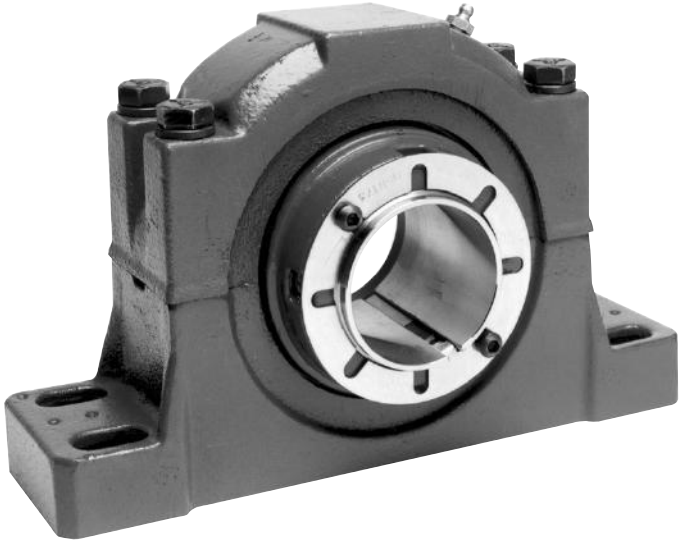

- Interchangeable with SAF style pillow blocks
- Patented adapter mounting system
- Easy installation - no feeler gauges needed
- Easy removal - no torches, sledge hammers or special tools needed
- DODGE TRIDENT triple lip seal provides superior sealing system
- Labyrinth seal available for high speed or high temperature applications.
- Up to ±1° misalignment capability
- Seal land on OD of inner ring maintains full contact pressure even when misaligned
- High capacity double row spherical bearings
- 2 bolt pillow blocks in sizes 1-7/16” to 3-6/16”
- 4 bolt pillow blocks in sizes 2-7/16” to 7”

ISAF HYD



- Built in hydraulic mounting and dismounting
  - No feeler gauges for installation
  - No torches or sledge hammers for removal
- Built in taconite style sealing
- 4 bolt pillow blocks 5-7/16" through 15"
- 22232K through 23176K double row spherical bearings

NOMENCLATURE

ISAF



P2B 515 - ISAF - 207 R E HYD

HOUSING STYLE	HOUSING SIZE	BEARING TYPE	SIZE	SEAL	OTHER DATA
P2B = Pillow Block 2 Bolt Base, Cast Iron P4B = Pillow Block 4 Bolt Base, Cast Iron	5xx for interchangeable SAF style housings	ISAF = IMPERIAL SAF	Inches and 16th 2 = 2” 07 = 7/16” 207 = 2-7/16”	R = TRIDENT Triple Lip Contact Seal L = Labyrinth Seal	E = EXPANSION If E does not appear, bearing is a non-expansion type Hydraulic version built in hydraulic assist

FEATURES/BENEFITS

ISN



- Interchangeable with 500 series “SN” dimensioned products
- Patented Imperial "Push/Pull" adapter mounting system
- Eliminates need for feeler gauges
- Fifteen minute installation and removal
- Field convertible from expansion to non-expansion and vice versa
- Triple lip contact seals for wet or dirty applications
- Labyrinth non-contact seals for higher speed/higher temperature applications

ISNX HYD



- Interchangeable with large-bore 3100 series plummer blocks
- Built in hydraulic mounting and dismounting
  - No feeler gauges for installation
  - No torches or sledge hammers for removal
- Built in taconite style sealing
- Four-bolt pillow blocks 150mm through 360mm
- 23134K through 23176K double row spherical bearings

NOMENCLATURE



How To Order

There are two ways to specify DODGE Bearings. Most of the product offerings have part numbers with listings shown throughout this catalog. Use of part numbers ensures accurate order processing.

When part numbers are not shown, the product may be specified by description or part name. This method is used when ordering units that include modifications or options. To order by description, use the nomenclature key shown on this page and add any special instructions to the end of the description for options not covered by the nomenclature.

DODGE Spherical Bearings are factory adjusted and pre-lubricated. For applications where extreme ambient temperatures, high speeds, or high loads are expected, a variety of specialty lubricants are available. Standard lubricant provided is Mobil Grease XHP 222, a lithium complex based grease. High temperature greases available upon request. Other special lubricants are available upon request. Special lubricant options usually involve set-up charges, minimum quantities and list price premiums. To order, specify type of lubricant required at the end of the product name or after the standard part number.

Example: 071792 or 071650 except with Mobil Grease HTS #2 grease

or

SP2BIP108R except with Mobil Grease HTS #2 grease

For applications requiring modifications not listed, we encourage you to contact our Application Engineering Department for Bearings at 864-284-5700.

P2B 507 - ISN - 030 MFR HYD

- HYD — Built-in hydraulic mount and dismount
- MFR — Other Data
  - F = Non-expansion
  - L = Expansion
  - R = Trident rubbing seal
  - S = Labyrinth seal
- 030 — Size
  - M = Size in millimeters
  - 030M = 30mm
  - otherwise inches and 16ths
- ISN — Bearing Type
  - ISN = Imperial SN
  - ISNX = Hydraulic Imperial, large bore
- 507 — Housing Size
  - 5xx For adapter mounted 22200K series bearings Interchangeable with SN style bearings
  - 0xx For adapter mounted 23000K series bearings Interchangeable with large bore plummer blocks
  - 31xx For adapter mounted 23100K series bearings Interchangeable with large bore plummer blocks
- P2B — Housing Style
  - P2B = Pillow Block 2 Bolt Base
  - P4B = Pillow Block 4 Bolt Base

FEATURES/BENEFITS PAGE B14-2	SPECIFICATIONS PAGE B14-5	SELECTION PAGE B14-14	DIMENSIONS PAGE B14-30

SELECTION

IMPERIAL-IP, ISAF, HD, ISN, ISNX

DODGE Spherical Roller Bearings have the capacity to carry heavy radial loads and combined radial and thrust loads. The maximum recommended load which can be applied is limited by various components in the system such as bearing, housing, shaft, shaft attachment, speed and life requirements as listed in this catalog. DODGE spherical roller bearings have been applied successfully even when these limits have been exceeded under controlled operating conditions. Contact DODGE Application Engineering (864-284-5700) for applications which exceed the recommendations of this catalog.

L_{10} Hours Life - The life which may be expected from at least 90% of a given group of bearings operating under identical conditions.

$$L_{10}\text{ Life, Hours} = \left(\frac{C}{P}\right)^{10/3} X \left(\frac{16667}{RPM}\right)$$

Where:

C = Dynamic Capacity (Table 1 on page B4-17 for IMPERIAL), lbs.

P = Equivalent Radial Load, lbs.

GENERAL

Heavy Service - For heavy shock loads, frequent shock loads, or severe vibrations, add up to 50% (according to severity of conditions) to the Equivalent Radial Load to obtain a Modified Equivalent Radial Load. Consult DODGE Application Engineering for additional selection assistance.

Thrust load values shown in the table below are recommended as a guide for general applications that will give adequate L_{10} life. Spherical bearings require a radial load at least equal to the thrust load for proper operation. If the thrust load exceeds this limit, consult Application Engineering. Where substantial radial load is also present, it is advisable to calculate actual L_{10} life to assure that it meets the requirements. The effectiveness of the shaft attachment to carry thrust load depends on proper tightening of the bearing to the shaft. Therefore, it is advisable to use auxiliary thrust carrying devices such as shaft shoulder, snap ring or a thrust collar to locate the bearing under thrust loads heavier than shown below, or where extreme reliability is desired.

RPM	20- 200	201-2000	Over 2000
Recommended Thrust Load	C/20	C/40	C/60

The shaft tolerances recommended below are adequate for normal radial and radial/thrust load applications. Since the allowable load, especially at a low speed, is very large, the shaft should be checked to assure adequate shaft strength.

The magnitude and direction of both the thrust and radial load must be taken into account when selecting a housing. **When pillow blocks are utilized, heavy loads should be directed through the base. Where cap loads are involved, see Table 3 on page B4-15 for maximum values.** Where a load pulls the housing away from the mounting base, both the hold-down bolts and housing must be of adequate strength. Auxiliary load carrying devices such as shear bars are advisable for side or end loading of pillow blocks and radial loads for flange units.

Shaft Tolerances

	Tolerance, Inches
Up To 1-1/2”	+.000 -.002”
1-9/16 to 2-1/2”	+.000 -.003”
2-5/8 to 4”	+.000 -.004”
4-3/16 to 6”	+.000 -.005”
6-7/16” and above	+.000 -.006”

BEARING SUPPORTING RADIAL LOADS ONLY

1. Define L_{10} Life Hours desired.
2. Establish bearing radial load, F_R (F_R = P for Pure Radial Load Conditions). The DODGE program BEST★ can be used to find application loads.
3. Establish RPM.

Using the easy selection Table 2 on page B4-18 for IMPERIAL, find, under the RPM column, the equivalent radial load that equals or is slightly higher than the application radial load for the desired life. The shaft size on the far left will be the minimum shaft size that you can use for your application.

If the desired life is different than the values shown on the chart, use alternate Method A shown below.

Example:
1. L_{10} Life = 30,000 Hours
2. Radial load = 4000 lbs.
3. RPM = 1,000

At the intersection of the 1,000 RPM column and the 30,000 hours L_{10} life row, the equivalent radial load of 4116 lbs. exceeds the 4000 lbs. radial load for shaft size 2-3/8” to 2-1/2”. A bearing with bore ranging from 2-3/8” to 2-1/2”, or larger, may be used for this application.



IMPERIAL-IP, ISAF, HD, ISN, ISNX

ALTERNATE METHOD A - SELECTING A BEARING FOR AN L_{10} LIFE VALUE NOT SHOWN IN THE EASY SELECTION CHART.

The L_{10} life equation can be rearranged so that the bearing dynamic capacity C is identified in terms of L_{10}, RPM and P

$$C = \left(\frac{L_{10} \times RPM}{16667} \right)^{0.3} \times P$$

(P = F_R for Pure Radial Load Conditions)

Since the L_{10}, RPM and P are known, solve for C. Select from the dynamic capacity column on Table 1 the C value equal to or greater than the C value just calculated. The bore size on the far left represents the proper bore size selection. Check that the application RPM does not exceed the MAX. RPM from Table 1. When selecting an L_{10} life of less than 30,000 hours, particular attention must be paid to shaft deflection and proper lubricant selection.

SELECTING BEARINGS SUPPORTING COMBINATION RADIAL AND THRUST LOADS

When a bearing supports both a radial load and a thrust load, the loading on the two rows is shared unequally depending on the ratio of thrust to radial load. The use of the X (radial factor) and Y (thrust factor) from Table 1 converts the applied thrust load and radial load to an equivalent radial load having the same effect on the life of the bearing as a radial load of this magnitude.

The equivalent radial load P = XFR + YFA

Where:

P = Equivalent radial load, lbs.
F_R = Radial load, lbs. (see Table 1 for allowable slip fit maximum load)
F_A = Thrust (axial) load, lbs.
e = Thrust load to radial load factor (Table 1)
X = Radial load factor (Table 1)
Y = Thrust load factor (Table 1)

To find X and Y, calculate F_A/F_R and compare to e for the selected bore size. Determine X and Y from Table 1 on page B4-17 depending on whether F_A/F_R is equal to or less than e, or F_A/F_R is greater than e. Substitute all known values into the equivalent radial load equation. P (equivalent radial load) can be used in the life formula to determine L_{10}, or it can be compared to the allowable equivalent radial load ratings for the speed and hours life desired in the easy selection.

SELECTING BEARINGS SUPPORTING ONLY THRUST LOADS

Spherical Roller Bearings generally are not recommended for pure thrust load applications. However, they will perform satisfactorily under very light pure thrust loads. Consult DODGE Application Engineering (864-284-5700).

SELECTING LUBRICATION

IMPERIAL spherical roller bearings are lubricated at the factory with Mobil Grease XHP 222 - lithium complex grease. This grease will adequately handle low and medium speeds with low and medium loads at normal temperatures on Table 10 on page B4-29. For very low and high speeds, for heavy loads, and for low and high temperatures, special greases may be used. Contact DODGE Application Engineering (864-284-5700), DODGE engineers will recommend bearings and lubricants for the above unusual conditions. DODGE also has the expertise to custom design and build special bearings for your needs. The only maintenance requirement for DODGE Spherical roller bearings is periodic relubrication at regular intervals as outlined in the appropriate instruction manuals.

MISALIGNMENT CONSIDERATIONS

In nearly all applications good design practice requires two bearings supporting the shaft. In cases where three or more bearings are installed, unless precautions are taken to line the bearings up, both vertically and horizontally, it is possible to induce heavy loads. In the case of two bearings, alignment is not as critical, especially with DODGE Unitized Spherical Roller Bearings. IMPERIAL bearings are designed to allow a maximum of ±1° of static and dynamic misalignment. To ensure good alignment, mounting surfaces must be checked for flatness and must lie in the same plane. When tightening base bolts, each bolt should be alternately tightened in incremental torque values until full torque is achieved to prevent the angular shifting of the pillow block that occurs when one bolt is tightened to its full torque. Shimming may be required to minimize misalignment.

★ The DODGE Bearing Evaluation and Selection Technique (BEST) is a menu driven computer program that calculates bearing loads, fatigue life and operating temperature for a two bearing shaft system based on user supplied input parameters. This interactive program is available at www.ptwizard.com under the Product Selection area.

FEATURES/BENEFITS PAGE B14-2	SPECIFICATIONS PAGE B14-5	HOW TO ORDER/NOMENCLATUE PAGE B14-8	DIMENSIONS PAGE B14-30

SELECTION

IMPERIAL-ISNX

To find X and Y, calculate F_A/F_R and compare to e for the selected bore size. Determine X and Y from Table 3 on page B4-17 depending on whether F_A/F_R is equal to or less than e, or F_A/F_R is greater than e. Substitute all known values into the equivalent radial load equation. P (equivalent radial load) can be used in the life formula to determine L_{10}, or it can be compared to the allowable equivalent radial load ratings for the speed and hours life desired in the easy selection on page B4-17.

SELECTING BEARINGS SUPPORTING ONLY THRUST LOADS

Spherical Roller Bearings generally are not recommended for pure thrust load applications. However, they will perform satisfactorily under very light pure thrust loads. Consult DODGE Application Engineering (864-284-5700).

SELECTING LUBRICATION

IMPERIAL spherical roller bearings are lubricated at the factory with Mobil Grease XHP 222 - lithium complex grease. This grease will adequately handle low and medium speeds with low and medium loads at normal temperatures on Table 10 on page B4-29. For very low and high speeds, for heavy loads, and for low and high temperatures, special greases may be used. Contact DODGE Application Engineering (864-284-5700), DODGE engineers will recommend bearings and lubricants for the above unusual conditions. DODGE also has the expertise to custom design and build special bearings for your needs. The only maintenance requirement for DODGE Spherical roller bearings is periodic relubrication at regular intervals as outlined in the appropriate instruction manuals.

MISALIGNMENT CONSIDERATIONS

In nearly all applications good design practice requires two bearings supporting the shaft. In cases where three or more bearings are installed, unless precautions are taken to line the bearings up, both vertically and horizontally, it is possible to induce heavy loads. In the case of two bearings, alignment is not as critical, especially with DODGE Unitized Spherical Roller Bearings. IMPERIAL bearings are designed to allow a maximum of ±1° of static and dynamic misalignment. To ensure good alignment, mounting surfaces must be checked for flatness and must lie in the same plane. When tightening base bolts, each bolt should be alternately tightened in incremental torque values until full torque is achieved to prevent the angular shifting of the pillow block that occurs when one bolt is tightened to its full torque. Shimming may be required to minimize misalignment.

Lubrication Guide for Hydraulic ISAF/ISNX

Lubrication Guide in Months				
Bore (in)	**1 - 250 rpm**	**251 - 500 rpm**	**501 - 750 rpm**	**751-1000 rpm**
5-7/16 - 5-1/2	1.50	1	0.50	0.25
5-15/16 - 7	1	0.50	0.50	0.25
8 - 9	1	1	0.50	.....
10 - 12-1/2	1	0.50	.....	.....
14 - 15	0.50	0.25	.....	.....

Based on 12 hrs/day, 150 F° Max

Continuous operation, 24 h/d, decrease by 50%

Lubrication Guide for Imperial/ISAF/ISN

Re-Lubrication Intervals (Months) Based on 12 hours per day, 150°F M									
Shaft Size. (Inches)	**RPM**								
	250	**500**	**750**	**1000**	**1250**	**1500**	**2000**	**2500**	**>3000**
1-1/8 to 2	4	3	2	2	1	0.50	0.25	0.25	0.25
2-3/16 to 2-1/4	3.50	2.50	1.50	1	0.50	0.50	0.25	0.25	0.25
2-3/8 to 3	3	2	1.50	1	0.50	0.25	0.25	0.25	0.25
3-3/16 to 3-1/2	2.50	1.50	1	0.50	0.25	0.25	0.25	0.25	-
3-11/16 to 4-1/2	2	1.50	1	0.50	0.25	0.25	0.25	-	-
4-15/16 to 5-1/2	1.50	1	0.50	0.25	0.25	0.25	-	-	-
5-15/16 to 6	1	0.50	0.50	0.25	0.25	0.25	-	-	-
6-7/16 to 7	1	0.50	0.25	0.25	0.25	-	-	-	-



IMPERIAL - Spherical Roller Bearing

Table 1: IMPERIAL Spherical Roller Bearing

Shaft Size Inches	Basic Bearing Description	e	F_A/F_R<e		F_A/F_R>e		Adapter Maximum Thrust Load lbs.	Dynamic Capacity (C) lbs.	Static Capacity (Co) lbs.	Maximum Speed*		Maximum ISAF Expansion Capability Inches
			X	Y	X	Y				Labyrinth RPM	TRIDENT RPM	
1-1/8 1-3/16 1-1/4 1-3/8 1-7/16 1-1/2	22208	0.28	1.0	2.4	0.67	3.6	620	20,800	21,000	6,000	3,975	7/32
1-1/2 ** 1-5/8 1-11/16 1-3/4	22209	0.26	1.0	2.6	0.67	3.9	700	20,800	22,000	5,600	3,725	7/32
1-3/4 ** 1-7/8 1-15/16 2	22210	0.24	1.0	2.8	0.67	4.2	775	22,000	24,000	5,300	3,520	17/64
2-3/16 2-1/4	22211	0.23	1.0	2.9	0.67	4.3	930	27,000	29,000	4,500	3,000	7/32
2-1/4 ** 2-3/8 2-7/16 2-1/2	22213	0.24	1.0	2.8	0.67	4.2	1,360	39,000	47,500	3,800	2,400	5/16
2-11/16 2-3/4 2-15/16 3	22215	0.22	1.0	3.1	0.67	4.6	1,570	41,500	53,000	3,400	2,250	15/64
3-3/16 3-1/4 3-7/16 3-1/2	22218	0.23	1.0	2.9	0.67	4.3	2,430	65,500	81,500	2,600	1,825	3/8
3-11/16 3-15/16 4	22220	0.24	1.0	2.8	0.67	4.2	3,100	83,000	104,000	2,200	1,530	3/8
4-7/16 4-1/2	22222	0.25	1.0	2.7	0.67	4.0	3,930	104,000	132,000	2,000	1,325	3/8
4-15/16 5	22226	0.26	1.0	2.6	0.67	3.9	5,610	146,000	196,000	1,800	1,175	3/8
5-7/16 5-1/2	22228	0.25	1.0	2.7	0.67	4.0	6,419	166,000	236,000	1,700	1,100	3/8
5-15/16 6	22232	0.26	1.0	2.6	0.67	3.9	8,630	220,000	315,000	1,500	975	3/8
6-7/16 6-1/2 6-15/16 7	22236	0.25	1.0	2.7	0.67	4.0	10,437	260,000	375,000	1,300	845	3/8

* Maximum grease speed is dependent on load and ambient conditions, consult Dodge Engineering

** IMPERIAL - Type E Dimensional Housing

FEATURES/BENEFITS PAGE B14-2	SPECIFICATIONS PAGE B14-5	HOW TO ORDER/NOMENCLATUE PAGE B14-8	DIMENSIONS PAGE B14-30

SELECTION



IMPERIAL - Spherical Roller Bearing

Table 2: Allowable Equivalent Radial Load Rating (lbs) at Various Revolutions per Minute

Size Inches	L_{10} Life Hours	Allowable Equivalent Radial Load Rating (lbs.) at Various Revolutions per Minute																					
		50	100	150	250	500	750	1,000	1,300	1,500	1,700	1,800	2,000	2,200	2,600	2,750	3,000	3,400	3,800	4,500	5,300	5600	6000
1-1/8 to 1-1/2	10,000	7498	6090	5393	4626	3758	3327	3052	2821	2703	2603	2559	2479	2409	2292	2253	2195	2114	2045	1944	1851	1820	1783
	30,000	5393	4380	3878	3327	2703	2393	2195	2029	1944	1872	1840	1783	1733	1648	1621	1579	1521	1471	1398	1331	1309	1282
	40,000	4947	4018	3558	3052	2479	2195	2014	1861	1783	1717	1688	1636	1590	1512	1487	1448	1395	1349	1282	1221	1201	1176
	60,000	4380	3558	3150	2703	2195	1944	1783	1648	1579	1521	1495	1448	1408	1339	1316	1282	1235	1195	1136	1081	1064	1042
	100,000	3758	3052	2703	2319	1883	1668	1530	1414	1355	1305	1282	1243	1208	1149	1129	1100	1060	1025	974	928	912	894
*1-1/2 1-5/8 1-11/16 1-3/4	10,000	7,498	6,090	5,393	4,626	3,758	3,327	3,052	2,821	2,703	2,603	2,559	2,479	2,409	2,292	2,253	2,195	1,521	2,045	1,944	1,331	1,820	
	30,000	5,393	4,380	3,878	3,327	2,703	2,393	2,195	2,029	1,944	1,872	1,840	1,783	1,733	1,648	1,621	1,579	1,521	1,471	1,398	1,331	1,309	
	40,000	4,947	4,018	3,558	3,052	2,479	2,195	2,014	1,861	1,783	1,717	1,688	1,636	1,590	1,512	1,487	1,448	1,395	1,349	1,282	1,221	1,201	
	60,000	4,380	3,558	3,150	2,703	2,195	1,944	1,783	1,648	1,579	1,521	1,495	1,448	1,407	1,339	1,316	1,282	1,235	1,195	1,136	1,081	1,063	
	100,000	3,758	3,052	2,703	2,319	1,883	1,668	1,530	1,414	1,355	1,305	1,282	1,243	1,208	1,148	1,129	1,100	1,060	1,025	974	928	912	
*1-3/4 1-7/8 1-15/16 2	10,000	7,930	6,441	5,704	4,893	3,975	3,519	3,228	2,984	2,859	2,753	2,706	2,622	2,548	2,424	2,383	2,322	1,608	2,163	2,056	1,957		
	30,000	5,704	4,633	4,102	3,519	2,859	2,531	2,322	2,146	2,056	1,980	1,947	1,886	1,833	1,743	1,714	1,670	1,608	1,556	1,479	1,408		
	40,000	5,232	4,250	3,763	3,228	2,622	2,322	2,130	1,969	1,886	1,816	1,786	1,730	1,681	1,599	1,572	1,532	1,475	1,427	1,356	1,291		
	60,000	4,633	3,763	3,332	2,859	2,322	2,056	1,886	1,743	1,670	1,608	1,581	1,532	1,489	1,416	1,392	1,356	1,306	1,264	1,201	1,144		
	100,000	3,975	3,228	2,859	2,452	1,992	1,764	1,618	1,496	1,433	1,380	1,356	1,314	1,277	1,215	1,194	1,164	1,121	1,084	1,030	981		
2-3/16 to 2-1/4	10,000	9,733	7,905	7,000	6,005	4,878	4,319	3,962	3,662	3,508	3,379	3,322	3,218	3,127	2,975	2,925	2,050	2,745	2,655	2,523			
	30,000	7,000	5,686	5,035	4,319	3,508	3,106	2,850	2,634	2,523	2,430	2,389	2,315	2,249	2,139	2,104	2,050	1,974	1,909	1,815			
	40,000	6,421	5,216	4,618	3,962	3,218	2,850	2,614	2,416	2,315	2,229	2,191	2,123	2,063	1,963	1,930	1,880	1,811	1,751	1,665			
	60,000	5,686	4,618	4,089	3,508	2,850	2,523	2,315	2,139	2,050	1,974	1,940	1,880	1,827	1,738	1,709	1,665	1,603	1,551	1,474			
	100,000	4,878	3,962	3,508	3,010	2,445	2,165	1,986	1,835	1,758	1,694	1,665	1,613	1,567	1,491	1,466	1,428	1,376	1,330	1,265			
*2-1/4 2-3/8 2-7/16 2-1/2	10,000	14058	11419	10111	8674	7046	6239	5723	5290	5068	4881	4798	4649	4518	4297	4225	4116	3964	3834				
	30,000	10111	8213	7272	6239	5068	4487	4116	3805	3645	3510	3451	3343	3249	3090	3039	2960	2851	2758				
	40,000	9275	7534	6671	5723	4649	4116	3776	3490	3343	3220	3165	3067	2980	2835	2787	2716	2616	2530				
	60,000	8213	6671	5907	5068	4116	3645	3343	3090	2960	2851	2803	2716	2639	2510	2468	2405	2316	2240				
	100,000	7046	5723	5068	4348	3531	3127	2868	2651	2540	2446	2405	2330	2264	2153	2118	2063	1987	1922				
2-11/16 to 3	10,000	14,959	12,151	10,759	9,230	7,497	6,639	6,090	5,629	5,392	5,194	5,105	4,946	3,457	4,572	4,496	4,380	4,219					
	30,000	10,759	8,739	7,738	6,639	5,392	4,775	4,380	4,048	3,878	3,735	3,672	3,558	3,457	3,288	3,233	3,150	3,034					
	40,000	9,870	8,017	7,098	6,090	4,946	4,380	4,018	3,714	3,558	3,427	3,368	3,263	3,171	3,016	2,966	2,890	2,783					
	60,000	8,739	7,098	6,285	5,392	4,380	3,878	3,558	3,288	3,150	3,034	2,982	2,890	2,808	2,671	2,626	2,559	2,464					
	100,000	7,497	6,090	5,392	4,626	3,758	3,327	3,052	2,821	2,703	2,603	2,559	2,479	2,409	2,291	2,253	2,195	2,114					
3-3/16 to 3-1/2	10,000	23,611	19,178	16,981	14,569	11,833	10,478	9,612	8,884	8,511	8,197	5,795	7,807	7,587	7,216								
	30,000	16,981	13,793	12,213	10,478	8,511	7,536	6,913	6,390	6,121	5,896	5,795	5,615	5,457	5,190								
	40,000	15,577	12,653	11,203	9,612	7,807	6,913	6,341	5,861	5,615	5,408	5,316	5,151	5,006	4,761								
	60,000	13,793	11,203	9,920	8,511	6,913	6,121	5,615	5,190	4,972	4,789	4,707	4,561	4,432	4,216								
	100,000	11,833	9,612	8,511	7,302	5,931	5,251	4,817	4,453	4,266	4,108	4,038	3,913	3,803	3,617								

Only the labyrinth seal (L seal) may be used to the right of the heavy line.

For applications in the dark shaded area, the maximum load for the specific speed is shown. The load does not correspond to the L_{10} shown at the left.

Applications in the light shaded area may require a high temperature lubrication, consult Dodge Engineering at (864) 297-4800

* IMPERIAL - Type E Dimensional Housing

FEATURES/BENEFITS PAGE B14-2	SPECIFICATIONS PAGE B14-5	HOW TO ORDER/NOMENCLATUE PAGE B14-8	DIMENSIONS PAGE B14-30



IMPERIAL - Spherical Roller Bearing

Table 2: Allowable Equivalent Radial Load Rating (lbs) at Various Revolutions per Minute (continued)

Size Inches	$L1_0$ Life Hours	Allowable Equivalent Radial Load Rating (lbs.) at Various Revolutions per Minute																					
		50	100	150	250	500	750	1,000	1,300	1,500	1,700	1,800	2,000	2,200	2,600	2,750	3,000	3,400	3,800	4,500	5,300	5600	6000
3-11/16 to 4	10,000	29,919	24,302	21,518	18,461	14,995	13,278	12,180	11,258	7,757	10,387	10,211	9,893	9,614									
	30,000	21,518	17,478	15,476	13,278	10,785	9,549	8,760	8,097	7,757	7,471	7,344	7,115	6,915									
	40,000	19,739	16,033	14,197	12,180	9,893	8,760	8,036	7,427	7,115	6,853	6,737	6,527	6,343									
	60,000	17,478	14,197	12,571	10,785	8,760	7,757	7,115	6,577	6,300	6,068	5,965	5,779	5,616									
	100,000	14,995	12,180	10,785	9,252	7,515	6,655	6,104	5,642	5,405	5,206	5,117	4,958	4,818									
4-7/16 to 4-1/2	10,000	37,489	30,450	26,963	23,132	18,789	16,637	15,261	10,145	13,513	13,015	12,794	12,396										
	30,000	26,963	21,901	19,392	16,637	13,513	11,966	10,976	10,145	9,719	9,361	9,202	8,915										
	40,000	24,733	20,090	17,789	15,261	12,396	10,976	10,069	9,307	8,915	8,587	8,441	8,178										
	60,000	21,901	17,789	15,751	13,513	10,976	9,719	8,915	8,241	7,894	7,603	7,474	7,242										
	100,000	18,789	15,261	13,513	11,593	9,417	8,338	7,649	7,070	6,773	6,523	6,412	6,213										
4-15/16 to 5	10,000	52,628	42,747	37,851	32,473	26,377	23,356	15,409	19,803	18,971	18,272	17,961											
	30,000	37,851	30,745	27,224	23,356	18,971	16,798	15,409	14,243	13,644	13,141	12,918											
	40,000	34,722	28,203	24,973	21,424	17,402	15,409	14,135	13,065	12,516	12,055	11,850											
	60,000	30,745	24,973	22,112	18,971	15,409	13,644	12,516	11,569	11,082	10,674	10,493											
	100,000	26,377	21,424	18,971	16,275	13,220	11,706	10,738	9,925	9,508	9,157	9,002											
5-7/16 to 5-1/2	10,000	59,838	48,603	43,037	36,922	29,990	26,555	17,520	22,516	21,569	20,775												
	30,000	43,037	34,957	30,953	26,555	21,569	19,099	17,520	16,194	15,513	14,942												
	40,000	39,478	32,066	28,394	24,359	19,786	17,520	16,071	14,855	14,230	13,706												
	60,000	34,957	28,394	25,142	21,569	17,520	15,513	14,230	13,153	12,601	12,136												
	100,000	29,990	24,359	21,569	18,505	15,031	13,309	12,209	11,284	10,810	10,412												
5-15/16 to 6	10,000	79,303	64,414	57,036	48,933	39,746	25,312	32,283	29,840	28,586													
	30,000	57,036	46,328	41,022	35,193	28,586	25,312	23,219	21,462	20,560													
	40,000	52,320	42,497	37,630	32,283	26,222	23,219	21,299	19,687	18,860													
	60,000	46,328	37,630	33,320	28,586	23,219	20,560	18,860	17,432	16,700													
	100,000	39,746	32,283	28,586	24,524	19,920	17,638	16,180	14,955	14,327													
6-7/16 to 7	10,000	93,722	76,126	67,407	57,829	46,972	29,914	38,153	35,265														
	30,000	67,407	54,751	48,480	41,592	33,783	29,914	27,441	25,364														
	40,000	61,833	50,224	44,472	38,153	30,990	27,441	25,172	23,266														
	60,000	54,751	44,472	39,378	33,783	27,441	24,298	22,289	20,602														
	100,000	46,972	38,153	33,783	28,983	23,542	20,845	19,122	17,675														

Only the labyrinth seal (L seal) may be used to the right of the heavy line.

For applications in the dark shaded area, the maximum load for the specific speed is shown. The load does not correspond to the L_{10} shown at the left.

Applications in the light shaded area may require a high temperature lubrication, consult Dodge Engineering at (864) 284-5700.

SELECTION



IMPERIAL - Spherical Roller Bearing

Table 3: ISAF Pillow Block Hydraulic - Spherical Roller Bearings

Shaft Size Adapter Mounted Inches	Bearing Series	E	$F_A/F_R \leq e$		$F_A/F_R > e$		Adapter Maximum Allowable Thrust Load lbs. †	Dynamic Capacity (C) lbs.	Static Capacity (C_0) lbs.	Maximum RPM
			X	Y	X	Y				
22200K Series										
5-7/16" 5-1/2" 140mm	22232K	.26	1	2.60	0.67	3.90	8630	260,000	315,000	1500
5-15/16" 6" 150mm	22234K	.26	1	2.60	0.67	3.90	9858	300,000	355,000	1300
6-7/16" 6-1/2" 160mm	22236K	.25	1	2.70	0.67	4.00	10437	308,000	375,000	1300
6-15/16" 7" 170mm	22238K	0.28	1	2.40	0.67	3.60	11786	270,000	415,000	1200
7-1/2" 7-15/16" 8" 200mm	22244K	.29	1	2.30	0.67	3.50	16020	365,000	550,000	950
23000K Series										
8-7/16" 8-1/2" 8-15/16" 9" 220mm	23048K	.25	1	2.70	0.67	4.10	14887	260,000	490,000	800
9-15/16" 10" 10-7/16" 10-1/2" 260mm	23056K	.25	1	2.70	0.67	4.10	20000	345,000	670,000	850
10-15/16" 11" 280mm	23060K	.25	1	2.70	.67	4.00	23875	440,000	820,000	630
12-7/16" 12-1/2" 320mm	23068K	.25	1	2.70	.67	4.00	30498	530,000	1,020,000	560
13-15/16" 14" 360mm	23076K	.24	1	2.80	.67	4.20	34598	570,000	1,190,000	500
15"	23080K	.24	1	2.80	.67	4.10	39926	680,000	1,390,000	450
23100K Series										
150mm	23134K	.28	1	2.40	.67	3.50	10090	232,000	375,000	1300
160mm	23136K	.29	1	2.30	.67	3.50	11650	270,000	430,000	1200
170mm	23138K	.30	1	2.30	.67	3.40	13320	305,000	490,000	1100
180mm	23140K	.35	1	2.00	.67	2.90	15100	300,000	510,000	900
200mm	23144K	.33	1	2.00	.67	3.00	17800	365,000	655,000	800
220mm	23148K	.33	1	2.10	.67	3.10	20710	415,000	735,000	750
9-7/16" 9-1/2" 240mm	23152K	.33	1	2.00	.67	3.00	19985	490,000	900,000	670
10-7/16" 10-1/2" 260mm	23156K	.32	1	2.10	.67	3.20	27571	530,000	980,000	630



IMPERIAL - Spherical Roller Bearing

Table 3: ISAF Pillow Block Hydraulic - Spherical Roller Bearings (Continued)

Shaft Size Adapter Mounted Inches	Bearing Series	E	$F_A/F_R \leq e$		$F_A/F_R > e$		Adapter Maximum Allowable Thrust Load lbs. †	Dynamic Capacity (C) lbs.	Static Capacity (C_0) lbs.	Maximum RPM
			X	Y	X	Y				
10-15/16" 11" 280mm	23160K	.33	1	2.10	.67	3.10	32373	600,000	1,110,000	600
11-15/16" 12" 300mm	23164K	.34	1	2.00	.67	2.90	37984	720,000	1,340,000	530
12-7/16" 12-1/2" 320mm	23168K	.34	1	2.00	.67	2.90	43568	830,000	1,560,000	500
13-7/16" 13-1/2" 340mm	23172K	.33	1	2.10	.67	3.10	45617	850,000	1,660,000	480
13-15/16" 14" 360mm	23176K	.32	1	2.10	.67	3.20	49719	915,000	1,830,000	450

† If the thrust load exceeds adapter maximum allowable thrust load, auxiliary methods or carrying thrust are required
23100K series bearings will be provided with metric housing only

SELECTION



IMPERIAL - Spherical Roller Bearing

Table 4: ISAF Large-Bore Hydraulic Assist Spherical Roller Bearings Selection Table

Shaft Size	Housing Designation	Bearing Series	Max RPM Grease Life	L_{10} Hours	Allowable Equivalent Radial Load Rating (lbs.) At Various RPM							
					50	100	150	200	250	300	400	500
22200K Series												
5-7/16"	532	22232K	1500	10,000	93.722	76,126	67,407	61,833	57,829	54,751	50,224	46,972
5-1/2"				30,000	67.407	54,751	48,480	44,472	41,592	39,378	36,122	33,783
140mm				60,000	54.751	44,472	39,378	36,122	33,783	31,985	29,340	27,441
5-15/16"	534	22234K	1300	10,000	108,140	87,837	77,777	71,346	66,726	63,175	57,591	54,199
6"				30,000	77,777	63,175	55,939	51,314	47,991	45,437	41,680	38,981
150mm				60,000	63,175	51,314	45,437	41,680	38,981	36,906	33,854	31,662
6-7/16"	536	22236K	1300	10,000	109,943	89,301	79,073	72,535	67,838	64,227	58,917	55,102
6-1/2"				30,000	79,073	64,227	56,871	52,169	48,791	46,194	42,374	39,631
160mm				60,000	64,227	52,169	46,194	42,374	39,631	37,521	34,419	32,190
6-15/16"	538	22238K	1200	10,000	97,326	79,053	69,999	64,211	60,054	56,857	52,156	48,779
7"				30,000	69,999	56,857	50,345	46,182	43,192	40,893	37,512	35,083
170mm				60,000	56,857	46,182	40,893	37,512	35,083	33,215	30,469	28,496
7-1/2"	544	22244K	950	10,000	131,571	106,869	94,629	86,804	81,184	76,862	70,507	65,942
7-15/16"				30,000	94,629	76,862	68,059	62,432	58,389	55,281	50,710	47,427
8"				60,000	76,862	62,432	55,281	50,710	47,427	44,902	41,190	38,522
200mm												
23000K Series												
8-7/16"	048	23048K	800	10,000	93,722	76,126	67,407	61,833	57,829	54,751	50,224	46,972
8-1/2"				30,000	67,407	54,751	48,480	44,472	41,592	39,378	36,122	33,783
8-15/16"				60,000	54,751	44,472	39,378	36,122	33,783	31,985	29,340	27,441
9"												
220mm												
9-15/16"	056	23056K	850	10,000	124,361	101,013	89,444	82,048	76,735	72,650	66,644	62,328
10'				30,000	89,444	72,651	64,330	59,010	55,190	52,252	47,932	44,828
10-7/16"				60,000	72,651	59,011	52,252	47,932	44,828	42,441	38,932	36,412
10-1/2"												
260mm												
10-15/16"	060	23060K	630	50,000	97,865	79,491	70,387	64,567	60,386	57,172	52,445	49,049
11"				80,000	84,995	69,037	61,130	56,076	52,445	49,653	45,548	42,598
280mm				100,000	79,491	64,567	57,172	52,445	49,049	46,438	42,598	39,840
12-7/16"	068	23068K	560	50,000	117,883	96,751	84,784	77,774	72,738	68,866	63,172	59,081
12-1/2"				80,000	102,380	83,158	73,634	67,546	63,172	59,809	54,864	51,312
320mm				100,000	94,751	77,774	68,866	63,172	59,081	55,937	51,312	47,989
13-15/16"	0076	23076K	500	50,000	126,780	102,977	91,183	83,643	78,227	74,064	67,940	
14"				80,000	110,107	89,435	79,191	72,643	67,940	64,323	59,005	
360mm				100,000	102,977	83,643	74,064	67,940	63,540	60,158	55,184	
15"	080	23080K	450	50,000	151,246	122,850	108,780	99,785	93,324	88,357	81,051	
380mm				80,000	131,355	106.694	94,474	86,662	81,051	76,737	70,392	
				100,000	122,850	99,785	88,357	81,051	75,803	71,768	65,834	
23100K Series												
150mm	3134	23134K	1300	50,000	51,603	41,914	37,113	34,044	31,840	30,145	27,653	25,862
				80,000	44,815	36,401	32,232	29,567	27,653	26,181	24,016	22,461
				100,000	41,914	34,044	30,145	27,653	25,862	24,485	22,461	21,007
160mm	3136	23136K	1200	50,000	60,054	48,779	43,192	39,621	37,055	35,083	32,182	30,098
				80,000	52,156	42,364	37,512	34,410	32,182	30,469	27,950	26,140
				100,000	48,779	39,621	35,083	32,182	30,098	28,496	26,140	24,447
170mm	3138	23138K	1100	50,000	67,838	55,102	48,791	44,757	41,859	39,631	36,354	34,000
				80,000	58,917	47,855	42,374	38,871	36,354	34,419	31,573	29,528
				100,000	55,102	44,757	39,630	36,354	34,000	32,190	29,528	27,616
180mm	3140	23140K	900	50,000	66,726	54,199	47,991	44,023	41,172	38,981	35,758	33,442
				80,000	57,951	47,071	41,680	38,233	35,758	33,854	31,055	29,044
				100,000	54,199	44,023	38,981	35,758	33,442	31,662	29,044	27,164

FEATURES/BENEFITS PAGE B14-2 | SPECIFICATIONS PAGE B14-5 | HOW TO ORDER/NOMENCLATUE PAGE B14-8 | DIMENSIONS PAGE B14-30



IMPERIAL - Spherical Roller Bearing

Table 4: ISAF Large-Bore Hydraulic Assist Spherical Roller Bearings Selection Table (Continued)

Shaft Size	Housing Designation	Bearing Series	Max RPM Grease Life	L_{10} Hours	Allowable Equivalent Radial Load Rating (lbs.) At Various RPM							
					550	600	650	700	750	950	1300	1500
22200K Series												
5-7/16"	532	22232K	1500	10,000	45,648	44,472	43,417	42,462	41,592	38,745	35,265	33,783
5-1/2"				30,000	32,831	31,985	31,226	30,540	29,914	27,866	25,364	24,298
140mm				60,000	26,667	25,980	25,364	24,806	24,298	22,364	20,602	19,736
5-15/16"	534	22234K	1300	10,000	52,671	51,314	50,096	48,995	47,991	44,706	40,691	
6"				30,000	37,882	36,906	36,030	35,238	34,518	32,153	29,266	
150mm				60,000	30,770	29,977	29,266	28,622	28,036	26,117	23,771	
6-7/16"	536	22236K	1300	10,000	53,549	52,169	50,931	49,811	48,791	45,451	41,369	
6-1/2"				30,000	38,513	37,521	36,631	35,825	35,092	32,689	29,753	
160mm				60,000	31,283	30,477	29,753	29,099	28,503	26,552	24,167	
6-15/16"	538	22238K	1200	10,000	47,404	46,182	45,087	44,095	43,192	40,235	36,622	
7"				30,000	34,094	33,215	32,427	31,714	31,065	28,938	26,339	
170mm				60,000	27,693	26,979	26,339	25,760	25,232	23,505	21,394	
7-1/2"	544	22244K	950	10,000	64,083	62,432	60,950	59,610	58,389	54,392		
7-15/16"				30,000	46,090	44,902	43,837	42,873	41,995	39,120		
8"				60,000	37,427	36,472	35,607	34,824	34,110	31,775		
200mm												
23000K Series												
8-7/16"	048	23048K	800	10,000	45,648	44,472	43,417	42,462	41,592	38,745		
8-1/2"				30,000	32,831	31,985	31,226	30,540	29,914	27,866		
8-15/16"				60,000	26,667	25,980	25,364	24,806	24,298	22,634		
9"												
220mm												
9-15/16"	056	23056K	850	10,000	60,571	59,010	57,610	56,344	55,190			
10'				30,000	43,564	42,442	41,435	40,524	39,694			
10-7/16"				60,000	35,385	34,474	33,356	32,916	32,241			
10-1/2"												
260mm												
10-15/16"	060	23060K	630	50,000	47,666	46,438	45,336					
11"				80,000	41,397	40,331	39,374					
280mm				100,000	38,717	37,719	36,284					
12-7/16"	068	23068K	560	50,000	57,416							
12-1/2"				80,000	49,665							
320mm				100,000	46,636							
13-15/16"	076	23076K	500	50,000								
14"				80,000								
360mm				100,000								
15"	080	23080K	450	50,000								
380mm				80,000								
				100,000								
23100K Series												
150mm	3134	23134K	1300	50,000	25,133	24,485	23,905	23,379	22,900	21,332	19,416	
				80,000	21,828	21,265	20,761	20,304	19,888	18,527	16,863	
				100,000	20,414	19,888	19,417	18,990	18,601	17,327	15,771	
160mm	3136	23136K	1200	50,000	29,250	28,496	27,820	27,208	26,651	24,826	22,597	
				80,000	25,403	24,748	24,161	23,630	23,146	21,561	19,625	
				100,000	23,758	23,146	22,597	22,100	21,647	20,165	18,354	
170mm	3138	23138K	1100	50,000	33,041	32,190	31,426	30,735	30,106	28,045	25,526	
				80,000	28,696	27,957	27,293	26,693	26,146	24,356	22,169	
				100,000	26,838	26,146	25,526	24,965	24,453	22,779	20,734	
180mm	3140	23140K	900	50,000	32,500	31,662	30,911	30,231	29,612	27,585		
				80,000	28,226	27,498	26,846	26,256	25,718	23,957		
				100,000	26,398	25,718	25,108	24,556	24,052	22,406		

FEATURES/BENEFITS PAGE B14-2	SPECIFICATIONS PAGE B14-5	HOW TO ORDER/NOMENCLATUE PAGE B14-8	DIMENSIONS PAGE B14-30

SELECTION



IMPERIAL - Spherical Roller Bearing

Table 4: ISAF Large-Bore Hydraulic Assist Spherical Roller Bearings Selection Table (Continued)

Shaft Size	Housing Designation	Bearing Series	Max RPM Grease Life	L_{10} Hours	Allowable Equivalent Radial Load Rating (lbs.) At Various RPM							
					50	100	150	200	250	300	400	500
23100K Series (Continued)												
200mm	3144	23144K	800	50,000	81,184	65,942	58,389	53,561	50,093	47,427	43,505	40,688
				80,000	70,507	57,269	50,710	46,517	43,505	41,190	37,784	35,337
				100,000	65,942	53,561	47,427	43,505	40,688	38,522	35,337	33,049
220mm	3148	23148K	750	50,000	92,305	74,975	66,388	60,898	56,955	53,923	49,465	46,262
				80,000	80,165	65,115	57,657	52,889	49,465	46,832	42,960	40,178
				100,000	74,975	60,898	53,923	49,465	46,262	43,799	40,178	37,576
9-7/16"	3152	23152K	670	50,000	108,992	88,529	78,390	71,908	67,252	63,672	58,407	54,625
9-1/2"				80,000	94,658	76,886	68,080	62,451	58,407	55,299	50,726	47,442
240mm				100,000	88,529	71,908	63,672	58,407	54,625	51,718	47,442	44,370
10-7/16"	3156	23156K	630	50,000	117,883	95,751	84,784	77,774	72,738	68,866	63,172	59,081
10-1/2"				80,000	102,380	83,158	73,634	67,546	63,172	59,809	54,864	51,312
260mm				100,000	95,751	77,774	66,866	63,172	59,061	55,937	51,312	47,989
10-15/16"	3160	23160K	600	50,000	133,452	108,397	95,982	88,046	82,345	77,962	71,515	66,885
11"				80,000	115,902	94,142	83,359	76,467	71,515	67,709	62,110	58,089
280mm				100,000	108,397	88,046	77,962	71,515	66,885	63,325	58,089	54,327
11-15/16"	3164	23164K	530	50,000	160,143	130,076	115,178	105,655	98,814	93,554	85,818	80,262
12"				60,000	139,082	112,970	100,031	91,760	85,818	81,251	74,532	69,706
300mm				100,000	130,076	105,655	93,554	85,818	60,262	75,989	69,706	65,193
12-7/16"	3168	23168K	500	50,000	184,609	149,949	132,775	121,797	113,910	107,847	98,930	92,524
12-1/2"				80,000	160,331	130,229	115,314	105,779	98,930	93,664	65,919	80,356
320mm				100,000	149,949	121,797	107,847	96,930	92,524	87,599	80,356	75,153
13-7/16"	3172	23172K	480	50,000	189,058	153,562	135,975	124,732	116,655	110,446	101,313	94,753
13-1/2"				80,000	164,194	133,367	118,092	108,326	101,313	95,921	87,990	62,292
340mm				100,000	153,562	124,732	110,446	101,313	94,753	69,710	82,292	76,964
13-15/16"	3176	23176K	450	50,000	203,515	165,306	146,373	134,270	125,576	118,892	109,061	101,999
14"				80,000	176,750	143,566	127,123	116,612	109,061	103,256	94,718	88,585
360mm				100,000	165,306	134,270	118,892	109,061	101,999	96,570	88,585	82,649



IMPERIAL - Spherical Roller Bearing

Table 4: ISAF Large-Bore Hydraulic Assist Spherical Roller Bearings Selection Table (Continued)

Shaft Size	Housing Designation	Bearing Series	Max RPM Grease Life	L_{10} Hours	Allowable Equivalent Radial Load Rating (lbs.) At Various RPM							
					550	600	650	700	750	950	1300	1500
23100K Series (Continued)												
200mm	3144	23144K	800	50,000	39,541	38,522	37,608	36,782	36,028			
				80,000	34,341	33,456	32,662	31,944	31,290			
				100,000	32,117	31,290	30,548	29,876	29,264			
220mm	3148	23148K	750	50,000	44,958	43,799	42,760	41,820	40,963			
				80,000	39,045	38,039	37,137	36,320	35,576			
				100,000	36,517	35,576	34,732	33,968	33,273			
9-7/16"	3152	23152K	670	50,000	53,086	51,718	50,491	49,381	48,369			
9-1/2"				80,000	46,104	44,916	43,851	42,886	42,008			
240mm				100,000	43,119	42,008	41,011	40,110	39,288			
10-7/16"	3156	23156K	630	50,000	57,416	55,937	54,609	53,409	52,315			
10-1/2"				80,000	49,865	48,580	47,426	46,385	45,435			
260mm				100,000	46,636	45,435	44,357	43,381	42,493			
10-15/16"	3160	23160K	600	50,000	64,999	63,325	61,822	60,463	59,224			
11"				80,000	56,451	54,997	53,692	52,511	51,436			
280mm				100,000	52,796	51,436	50,215	49,111	46,105			
11-15/16"	3164	23164K	530	50,000	77,999	75,989	74,186					
12"				60,000	67,741	65,996	64,430					
300mm				100,000	63,355	61,723	60,258					
12-7/16"	3168	23168K	500	50,000	89,916	67,599						
12-1/2"				80,000	78,091	76,079						
320mm				100,000	73,034	71,152						
13-7/16"	3172	23172K	480	50,000	92,062	89,710						
13-1/2"				80,000	79,972	77,912						
340mm				100,000	74,794	72,667						
13-15/16"	3176	23176K	450	50,000	99,124							
14"				80,000	86,086							
360mm				100,000	80,514							

SELECTION



IMPERIAL - IP Spherical Roller Bearings

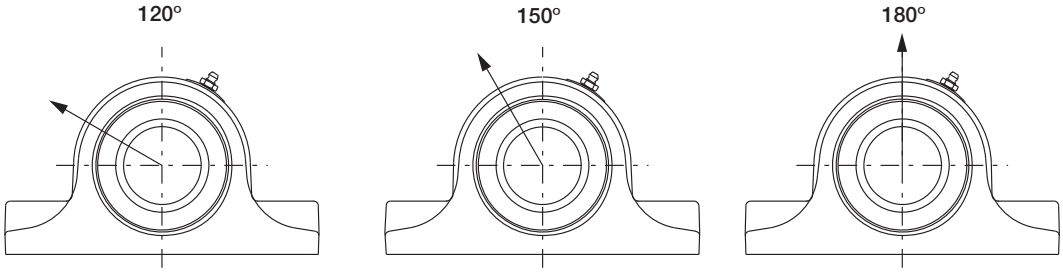

Table 5: IMPERIAL-IP 2-Bolt Pillow Block Housing Ratings*

Bore Size	Maximum Recommended Housing Cap Loads, lb		
	120°	150°	180°
1-1/8 to 1-1/2	2110	2640	3100
1-5/8 to 1-3/4	2380	2980	3500
1-7/8 to 2	3130	3910	4600
2-3/16 to 2-1/4	3330	4160	4900
2-3/8 to 2-1/2	3330	4160	4900
2-11/16 to 3	4420	5520	6500
3-3/16 to 3-1/2	4620	5780	6800
3-11/16 to 4	7500	9350	11000

Table 6: IMPERIAL-IP 4-Bolt Pillow Housing Ratings*

Bore Size	Maximum Recommended Housing Cap Loads, lb		
	120°	150°	180°
2-3/8 to 2-1/2	3810	4760	5600
2-11/16 to 3	4620	5780	6800
3-3/16 to 3-1/2	4700	5870	6900
3-11/16 to 4	7500	9350	11000
4-7/16 to 4-1/2	9900	12330	14500
4-15/16 to 5	13400	16750	19700

Table 7: IMPERIAL-ISN*

Bore Size	Maximum Recommended Housing Cap Loads, kN		
	120°	150°	180°
507 508	9.4	11.7	13.8
509 510	10.6	13.3	15.6
511	13.9	17.4	20.5
512	14.8	18.5	21.8
513 515	14.8	18.5	21.8
516 517	19.7	24.6	28.9
518 519	20.6	25.7	30.2
520 522	33.4	41.6	48.9
524	44	54.8	64.5
526 528	59.6	74.5	87.6
530	67.2	84.1	99.0
532	89.8	112.5	132.3

* When utilizing heavy cap loads on pillow block housings; the installation must adhere to the following procedures:

1. The pillow block base bolts must be of high strength (Grade 8 or Class 10.9) bolts and properly tightened to mounting structure.
2. Stop bars (shear strips) should be used against the plummer block where side loads are encountered.
3. In all cases where loads are heavy, the L_{10} life of the bearing should be checked for proper selection and life requirements.



Imperial-HD

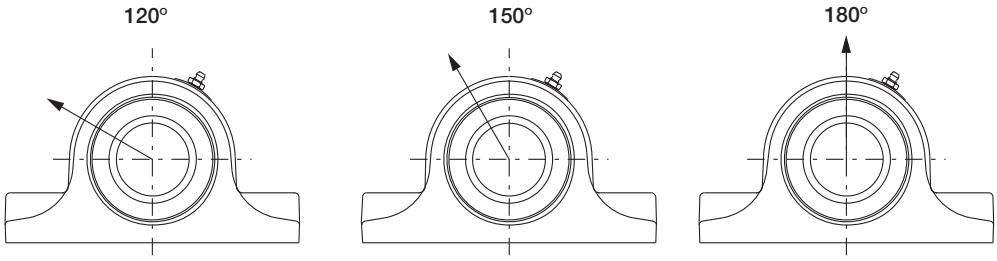

Table 8: Steel Housed Imperial - Housing Ratings*

Shaft Sizes	Basic Bearing Description	Maximum Recommended Housing Loads, lb	
		P2B	P4B
1-1/8 1-3/16 1-1/4 1-3/8 1-7/16 1-1/2	22208	24400	
1-1/2** 1-5/8 1-11/16 1-3/4	22209	26400	
1-3/4** 1-15/16 2	22210	30200	
2-3/16 2-1/4	22211	35400	
2-1/4** 2-3/8 2-7/16 2-1/2	22213	51300	52800
2-11/16 2-3/4 2-15/16 3	22215	59700	60000
3-3/16 3-1/4 3-7/16 3-1/2	22218	90700	95500
3-11/16 3-15/16 4	22220		115000
4-7/16 4-1/2	22222		152100
4-15/16 5	22226		188200

* It is important to note that the values listed above are housing fracture loads from various applied directions. These loads may exceed bearing, mounting bolt and/or shaft capacities. Applications subject to heavy housing loads, particularly shock loads, must adhere to the following procedures:

(1) The pillow block base bolts must be of high strength (Grade 8) bolts and properly tightened to mounting structure.

(2) Stop bars (shear strips) should be used against the plummer block where side loads are encountered.

(3) In all cases where loads are heavy, the L_{10} life of the bearing should be checked for proper selection and life requirements.,

** Imperial - Type E Dimensional Housing

SELECTION

IMPERIAL - ISAF Spherical Roller Bearings

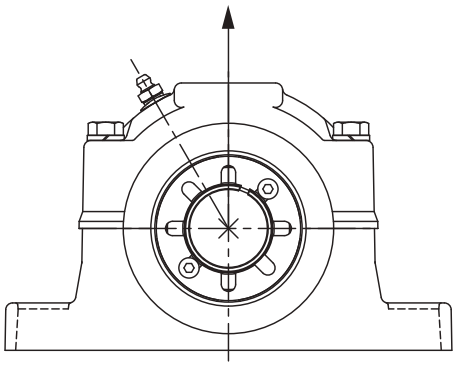

Table 9: ISAF Housing Rating*

Shaft Size (Inches)	Maximum Recommended Housing Cap Loads, Lbs
	180°
1-1/8 thru 1-1/2	4,600
1-5/8 thru 1-3/4	5,400
1-7/8 thru 2	7,875
2-3/16 thru 2-1/4	9,200
2-3/8 thru 2-1/2	9,220
2-11/16 thru 3	10,200
3-3/8 thru 3-1/2	14,700
3-11/16 thru 4	17,800
4-7/16 thru 4-1/2	18,300
4-15/16 thru 5	22,300
5-7/16 thru 5-1/2	25,100
5-15/16 thru 6	30,200
6-7/16 thru 7	35,300

* When utilizing heavy cap loads on pillow block housings; the installation must adhere to the following procedures:

1. The pillow block base bolts must be of high strength (Grade 8) bolts and properly tightened to mounting structure.
2. Stop bars (shear strips) should be used against the plummer block where side loads are encountered.
3. In all cases where loads are heavy, the L_{10} life of the bearing should be checked for proper selection and life requirements.



IMPERIAL - ISAF Spherical Roller Bearings

Table 10: Definition Of Operating Conditions For Unitized Spherical Roller Bearings

LOW SPEED MEDIUM SPEED HIGH SPEED	UP TO 20% OF MAX. RPM (TABLE 1 AND/OR TABLE 3) OVER 20% TO 80% OF MAX. RPM OVER 80% OF MAX. RPM
LIGHT LOAD NORMAL LOAD HEAVY LOAD	UP TO 8% OF **C** (TABLE 1 AND/OR TABLE 3) OVER 8% TO 18% OF **C** OVER 18% OF **C** **C**- DYNAMIC CAPACITY
LOW TEMPERATURE MEDIUM TEMPERATURE HIGH TEMPERATURE	20°F TO -100°F OVER 20°F TO 200°F OVER 200°F TO 250°F

DIMENSIONS

IMPERIAL - IP Pillow Block
1-1/8 THRU 2-1/4 INCH - 2-BOLT

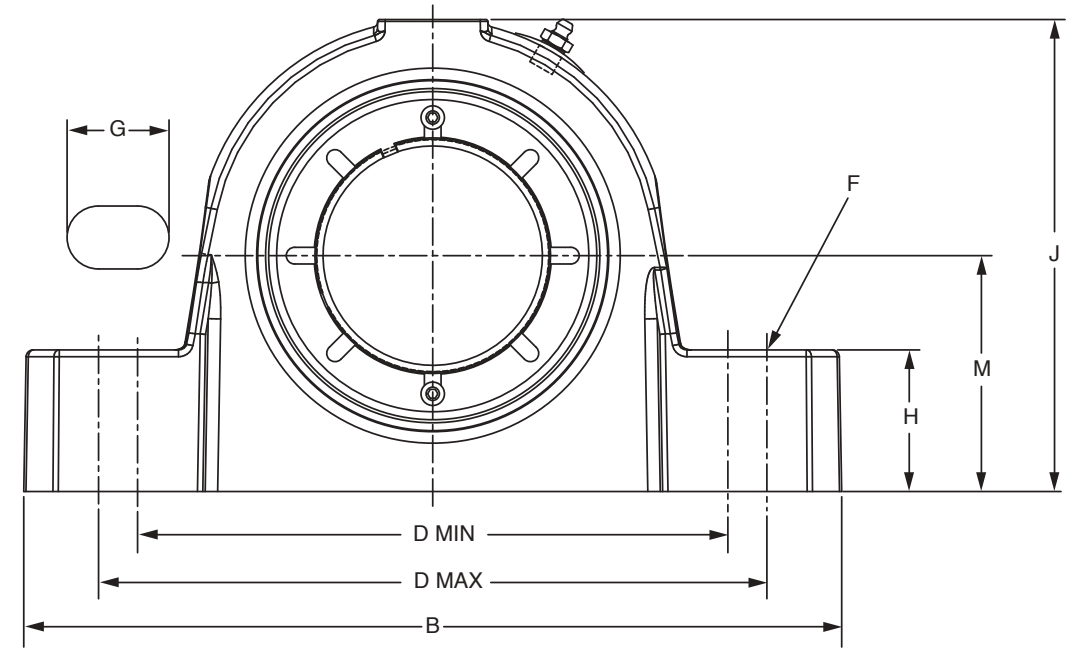

NOTE: All sizes use a 1/8-27 NPT hydraulic grease fitting

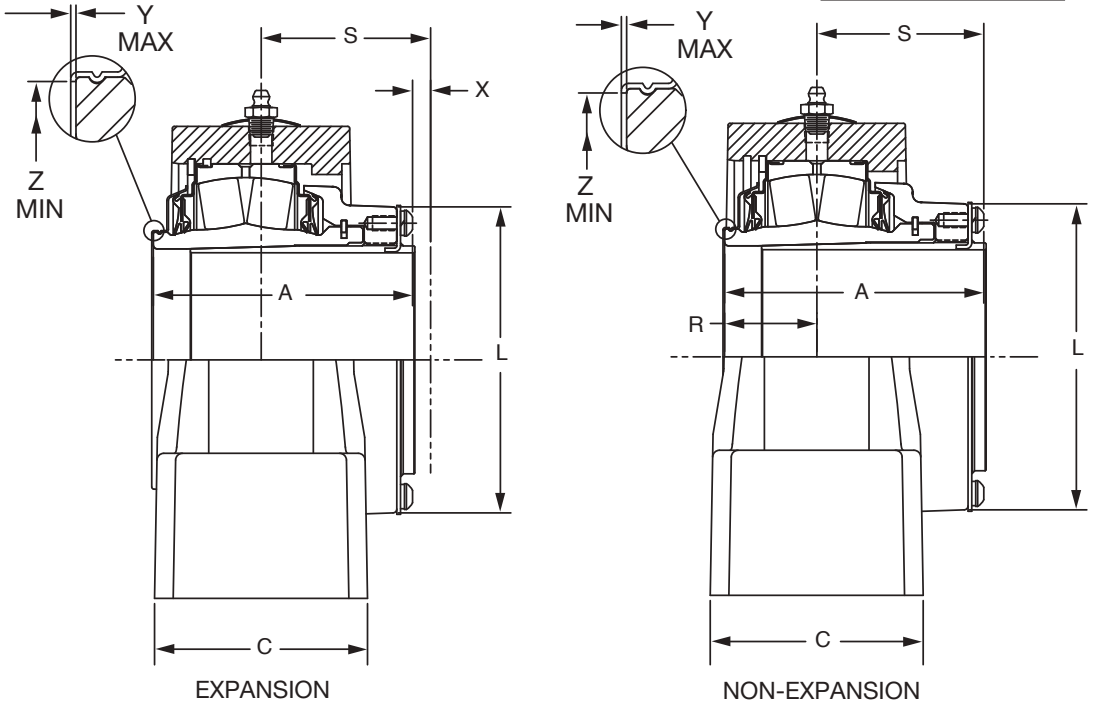

NOTE: See page B14-32 for 2-3/8 - 4 inch



IMPERIAL - IP Pillow Block
1-1/8 THRU 2-1/4 INCH - 2-BOLT

Bearing	Shaft Size Inch	TRIDENT Seal				Labyrinth Seal			
		Non-Expansion		Expansion		Non-Expansion		Expansion	
		Part No.	Part Name	Part No.	Part Name	Part No.	Part Name	Part No.	Part Name
22208	1-1/8	**069400**	P2B-IP-102R	**069428**	P2B-IP-102RE	**069456**	P2B-IP-102L	**069484**	P2B-IP-102LE
	1-3/16	**069401**	P2B-IP-103R	**069429**	P2B-IP-103RE	**069457**	P2B-IP-103L	**069485**	P2B-IP-103LE
	1-1/4	**069402**	P2B-IP-104R	**069430**	P2B-IP-104RE	**069458**	P2B-IP-104L	**069486**	P2B-IP-104LE
	1-3/8	**069403**	P2B-IP-106R	**069431**	P2B-IP-106RE	**069459**	P2B-IP-106L	**069487**	P2B-IP-106LE
	1-7/16	**069404**	P2B-IP-107R	**069432**	P2B-IP-107RE	**069460**	P2B-IP-107L	**069488**	P2B-IP-107LE
	1-1/2	**069405**	P2B-IP-108R	**069433**	P2B-IP-108RE	**069461**	P2B-IP-108L	**069489**	P2B-IP-108LE
22209	1- 5/8	**069406**	P2B-IP-110R	**069434**	P2B-IP-110RE	**069462**	P2B-IP-110L	**069490**	P2B-IP-110LE
	1-11/16	**069407**	P2B-IP-111R	**069435**	P2B-IP-111RE	**069463**	P2B-IP-111L	**069491**	P2B-IP-111LE
	1-3/4	**069408**	P2B-IP-112R	**069436**	P2B-IP-112RE	**069464**	P2B-IP-112L	**069492**	P2B-IP-112LE
22210	1-7/8	**069409**	P2B-IP-114R	**069437**	P2B-IP-114RE	**069465**	P2B-IP-114L	**069493**	P2B-IP-114LE
	1-15/16	**069410**	P2B-IP-115R	**069438**	P2B-IP-115RE	**069466**	P2B-IP-115L	**069494**	P2B-IP-115LE
	2	**069411**	P2B-IP-200R	**069439**	P2B-IP-200RE	**069467**	P2B-IP-200L	**069495**	P2B-IP-200LE
22211	2-3/16	**069412**	P2B-IP-203R	**069440**	P2B-IP-203RE	**069468**	P2B-IP-203L	**069496**	P2B-IP-203LE
	2 -1/4	**069413**	P2B-IP-204R	**069441**	P2B-IP-204RE	**069469**	P2B-IP-204L	**069497**	P2B-IP-204LE

Metric shaft sizes available upon request

Shaft Size	A	B	C	D		F Bolt Dia.	G	H	J	L	M	R	S	X Total Exp.	Y	Z
				Min	Max											
1-1/8 1-3/16 1-1/4 1-3/8 1-7/16 1-1/2	2 .63	6.80	1 .95	4.81	5.20	1/2	0.81	1.13	3.88	2.72	1.88	0.88	1.75	3/16	0.02	1.80
1- 5/8 1-11/16 1-3/4	2.81	7.38	2.06	5.31	5.70	1/2	0.81	1.25	4.27	3.00	2.13	0.81	2.00	1/4	0.02	2.08
1-7/8 1-15/16 2	2.86	8.38	2.50	6.06	6.44	5/8	0.95	1.31	4.56	3.28	2 .25	0.86	2.00	1/4	0.02	2.30
2-3/16 2 -1/4	3.03	8.88	2.63	6.56	6 .94	5/8	0.95	1.50	5 .00	3 .50	2.50	0.91	2.13	1/4	0.03	2.60

FEATURES/BENEFITS PAGE B14-2	SPECIFICATIONS PAGE B14-5	HOW TO ORDER/NOMENCLATUE PAGE B14-8	SELECTION PAGE B14-14

DIMENSIONS

IMPERIAL - IP Pillow Block
2-3/8 THRU 4 INCH - 2-BOLT

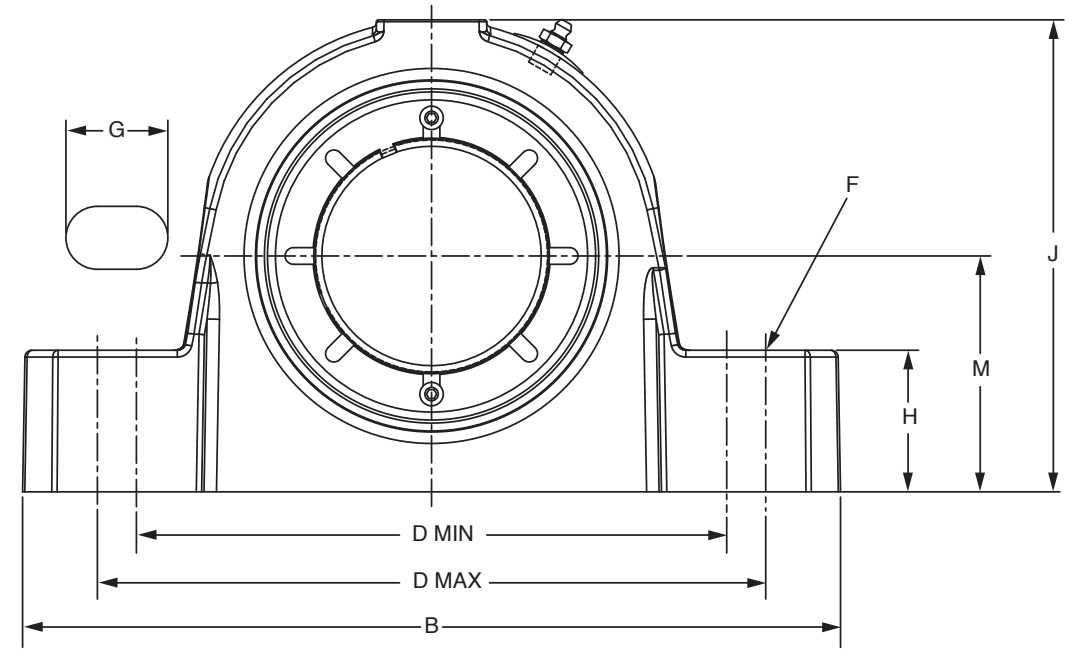

NOTE: All sizes use a 1/8-27 NPT hydraulic grease fitting

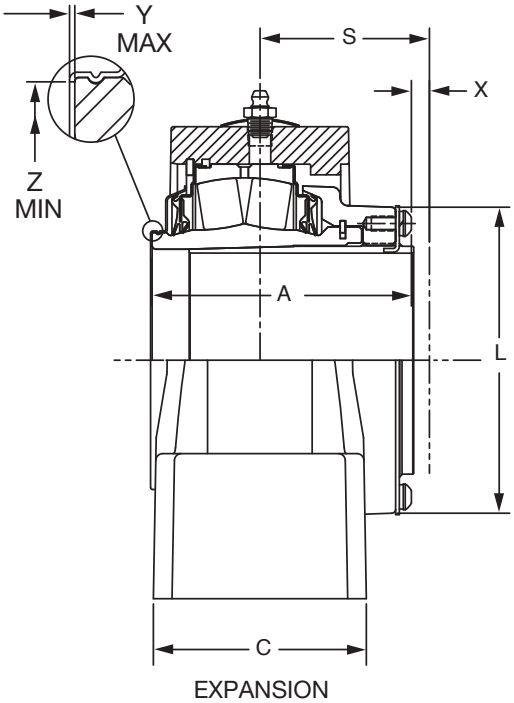

EXPANSION

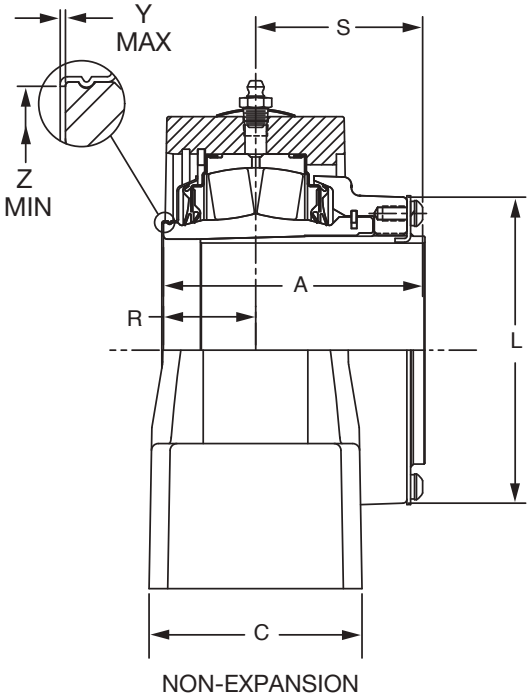

NON-EXPANSION

NOTE: See page B14-30 for 1-1/8 thru 2-1/4 inch



IMPERIAL - IP Pillow Block
2-3/8 THRU 4 INCH - 2-BOLT

Bearing	Shaft Size Inch	TRIDENT Seal				Labyrinth Seal			
		Non-Expansion		Expansion		Non-Expansion		Expansion	
		Part No.	Part Name	Part No.	Part Name	Part No.	Part Name	Part No.	Part Name
22213	2-3/8	**069414**	P2B-IP-206R	**069442**	P2B-IP-206RE	**069470**	P2B-IP-206L	**069498**	P2B-IP-206LE
	2-7/16	**069415**	P2B-IP-207R	**069443**	P2B-IP-207RE	**069471**	P2B-IP-207L	**069499**	P2B-IP-207LE
	2-1/2	**069416**	P2B-IP-208R	**069444**	P2B-IP-208RE	**069472**	P2B-IP-208L	**069500**	P2B-IP-208LE
22215	2-11/16	**069417**	P2B-IP-211R	**069445**	P2B-IP-211RE	**069473**	P2B-IP-211L	**069501**	P2B-IP-211LE
	2-3/4	**069418**	P2B-IP-212R	**069446**	P2B-IP-212RE	**069474**	P2B-IP-212L	**069502**	P2B-IP-212LE
	2-15/16	**069419**	P2B-IP-215R	**069447**	P2B-IP-215RE	**069475**	P2B-IP-215L	**069503**	P2B-IP-215LE
	3	**069420**	P2B-IP-300R	**069448**	P2B-IP-300RE	**069476**	P2B-IP-300L	**069504**	P2B-IP-300LE
22218	3-3/16	**069421**	P2B-IP-303R	**069449**	P2B-IP-303RE	**069477**	P2B-IP-303L	**069505**	P2B-IP-303LE
	3-1/4	**069422**	P2B-IP-304R	**069450**	P2B-IP-304RE	**069478**	P2B-IP-304L	**069506**	P2B-IP-304LE
	3-7/16	**069423**	P2B-IP-307R	**069451**	P2B-IP-307RE	**069479**	P2B-IP-307L	**069507**	P2B-IP-307LE
	3-1/2	**069424**	P2B-IP-308R	**069452**	P2B-IP-308RE	**069480**	P2B-IP-308L	**069508**	P2B-IP-308LE
22220	3-11/16	**069425**	P2B-IP-311R	**069453**	P2B-IP-311RE	**069481**	P2B-IP-311L	**069509**	P2B-IP-311LE
	3-15/16	**069426**	P2B-IP-315R	**069454**	P2B-IP-315RE	**069482**	P2B-IP-315L	**069510**	P2B-IP-315LE
	4	**069427**	P2B-IP-400R	**069455**	P2B-IP-400RE	**069483**	P2B-IP-400L	**069511**	P2B-IP-400LE

Metric shaft sizes available upon request

Shaft Size	A	B	C	D		F Bolt Dia.	G	H	J	L	M	R	S	X Total Exp.	Y	Z
				Min	Max											
2-3/8 2 -7/16 2-1/2	3.42	9.25	2.86	6.94	7.31	5/8	0.95	1.63	5.59	3.88	2.75	1.20	2.22	1/4	0.03	2.94
2-11/16 2-3/4 2-15/16 3	3.50	10.44	3.08	7.94	8.31	3/4	1.06	1.88	6.38	4.28	3.25	1.23	2.27	1/4	0.03	3.47
3-3/16 3-1/4 3-7/16 3-1/2	4.17	13.00	3.42	9.38	10.63	7/8	1.63	2.25	7.50	5.00	3.75	1.48	2.69	1/4	0.03	4.05
3-11/16 3-15/16 4	4.70	15.25	3.91	10.63	12.80	1	2.25	2.44	8.38	5.56	4.25	1.64	3.06	5/16	0.03	4.50

FEATURES/BENEFITS PAGE B14-2	SPECIFICATIONS PAGE B14-5	HOW TO ORDER/NOMENCLATUE PAGE B14-8	SELECTION PAGE B14-14

DIMENSIONS

IMPERIAL - IP Pillow Block with Type E Dimensions
1-3/8 THRU 2-3/16 INCH 2-BOLT

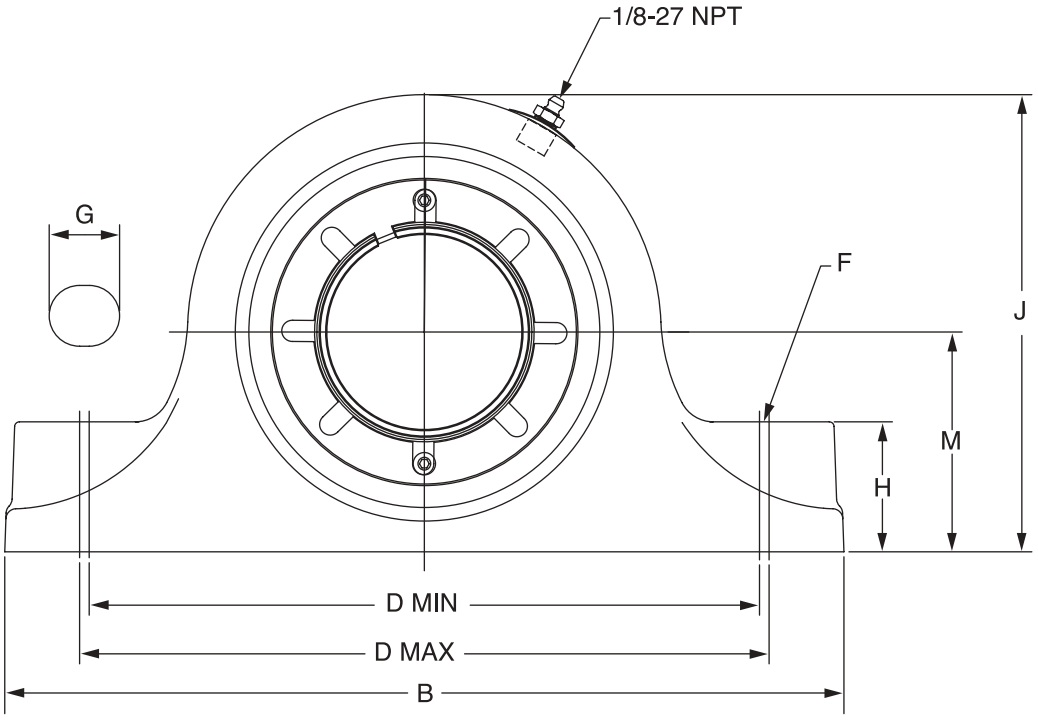

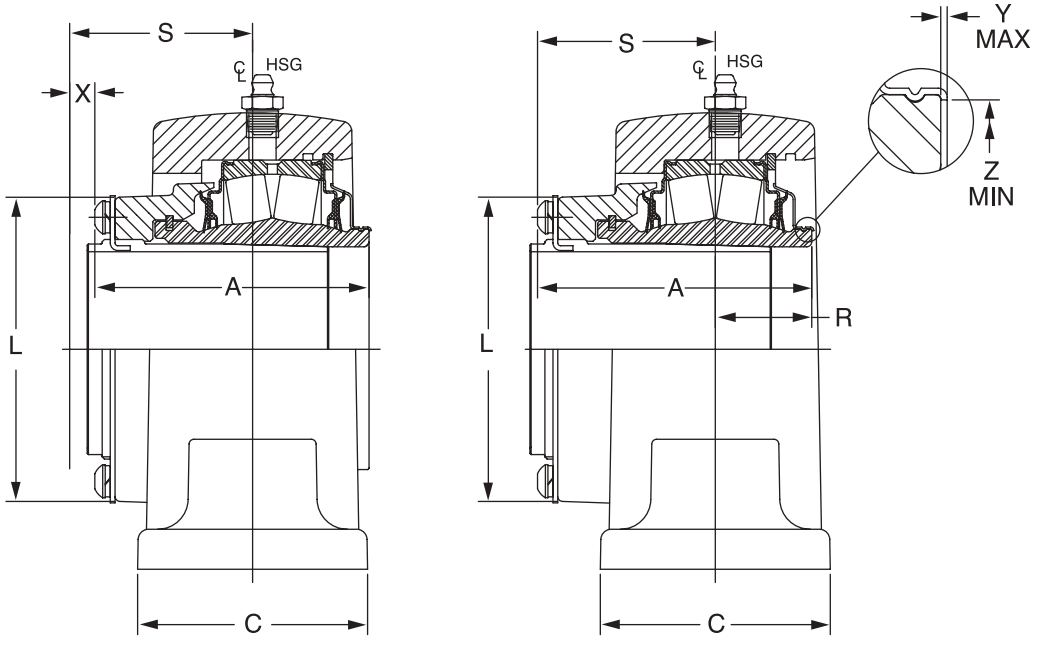

EXPANSION NON-EXPANSION

NOTE: See page B14-36 for 2-1/4 thru 3-1/2 inch

FEATURES/BENEFITS PAGE B14-2	SPECIFICATIONS PAGE B14-5	HOW TO ORDER/NOMENCLATUE PAGE B14-8	SELECTION PAGE B14-14



IMPERIAL - IP Pillow Block with Type E Dimensions
1-3/8 THRU 2-3/16 INCH 2-BOLT

Bearing Series	Shaft Size*	TRIDENT Seal				Labyrinth Seal			
		Non-Expansion		Expansion		Non-Expansion		Expansion	
		Part No.	Part Name	Part No.	Part Name	Part No.	Part Name	Part No.	Part Name
22208	1- 3/8	**071120**	EP2B-IP-106R	**071141**	EP2B-IP-106RE	**071162**	EP2B-IP-106L	**071183**	EP2B-IP-106LE
	1-7/16	**071121**	EP2B-IP-107R	**071142**	EP2B-IP-107RE	**071163**	EP2B-IP-107L	**071184**	EP2B-IP-107LE
22209	1-1/2	**071122**	EP2B-IP-108R	**071143**	EP2B-IP-108RE	**071164**	EP2B-IP-108L	**071185**	EP2B-IP-108LE
	1-5/8	**071123**	EP2B-IP-110R	**071144**	EP2B-IP-110RE	**071165**	EP2B-IP-110L	**071186**	EP2B-IP-110LE
	1-11/16	**071124**	EP2B-IP-111R	**071145**	EP2B-IP-111RE	**071166**	EP2B-IP-111L	**071187**	EP2B-IP-111LE
22210	1-3/4	**071125**	EP2B-IP-112R	**071146**	EP2B-IP-112RE	**071167**	EP2B-IP-112L	**071188**	EP2B-IP-112LE
	1-7/8	**071126**	EP2B-IP-114R	**071147**	EP2B-IP-114RE	**071168**	EP2B-IP-114L	**071189**	EP2B-IP-114LE
	1-15/16	**071127**	EP2B-IP-115R	**071148**	EP2B-IP-115RE	**071169**	EP2B-IP-115L	**071190**	EP2B-IP-115LE
	2	**071128**	EP2B-IP-200R	**071149**	EP2B-IP-200RE	**071170**	EP2B-IP-200L	**071191**	EP2B-IP-200LE
22211	2-3/16	**071129**	EP2B-IP-203R	**071150**	EP2B-IP-203RE	**071171**	EP2B-IP-203L	**071192**	EP2B-IP-203LE

*Consult Dodge For Sizes Not Listed

Shaft Size	A	B #	C #	D		F Bolt Dia.	G #	H #	J #	L	M	R	S	X Total Exp.	Y	Z
				Min	Max											
1-3/8 1-7/16	2.63	7.37	2.12	5.63	5.88	1/2	0.75	1.13	3.85	2.72	1.875	1.04	1.59	5/32	0.02	1.80
1-1/2 1-5/8 1-11/16	2.81	7.88	2.38	6.13	6.38	1/2	0.75	1.25	4.25	3.00	2.125	0.98	1.83	3/16	0.02	2.08
1-3/4 1-7/8 1-15/16 2	2.86	8.87	2.49	6.88	7.12	5/8	0.88	1.31	4.47	3.28	2.250	1.10	1.76	7/32	0.02	2.30
2-3/16	3.03	9.62	2.56	7.63	7.88	5/8	0.88	1.50	5.00	3.50	2.500	1.06	1.97	1/4	0.03	2.60

Notes: "A" And "R" Dimensions Do Not Include "Y" Dimension
Reference Dimension Only

FEATURES/BENEFITS PAGE B14-2	SPECIFICATIONS PAGE B14-5	HOW TO ORDER/NOMENCLATUE PAGE B14-8	SELECTION PAGE B14-14

DIMENSIONS

IMPERIAL - IP Pillow Block with Type E Dimensions
2-1/4 THRU 3-1/2 INCH 2-BOLT

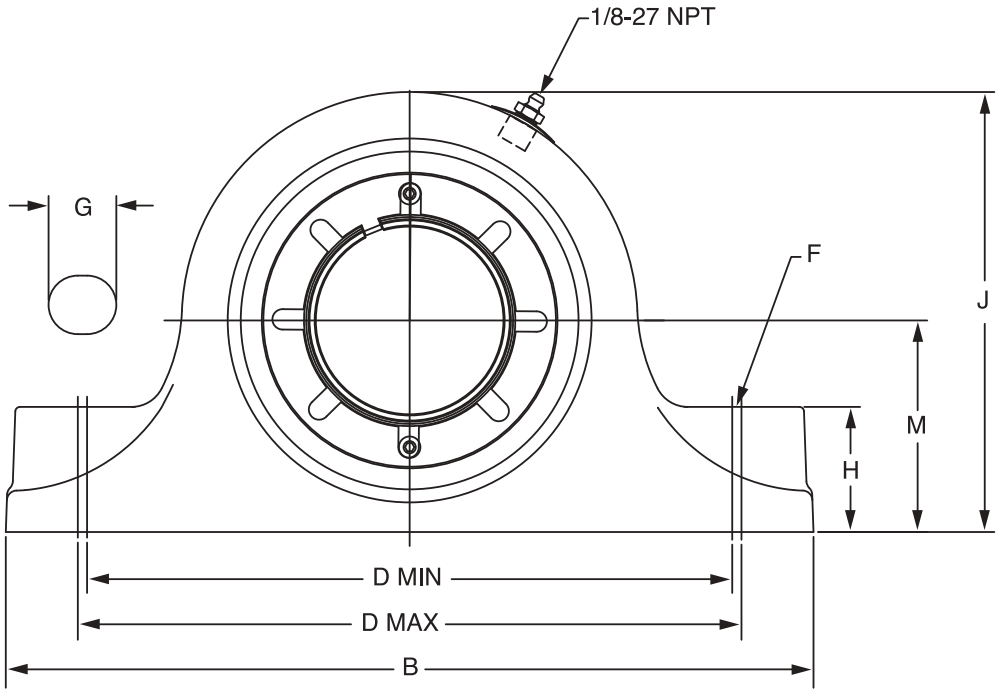

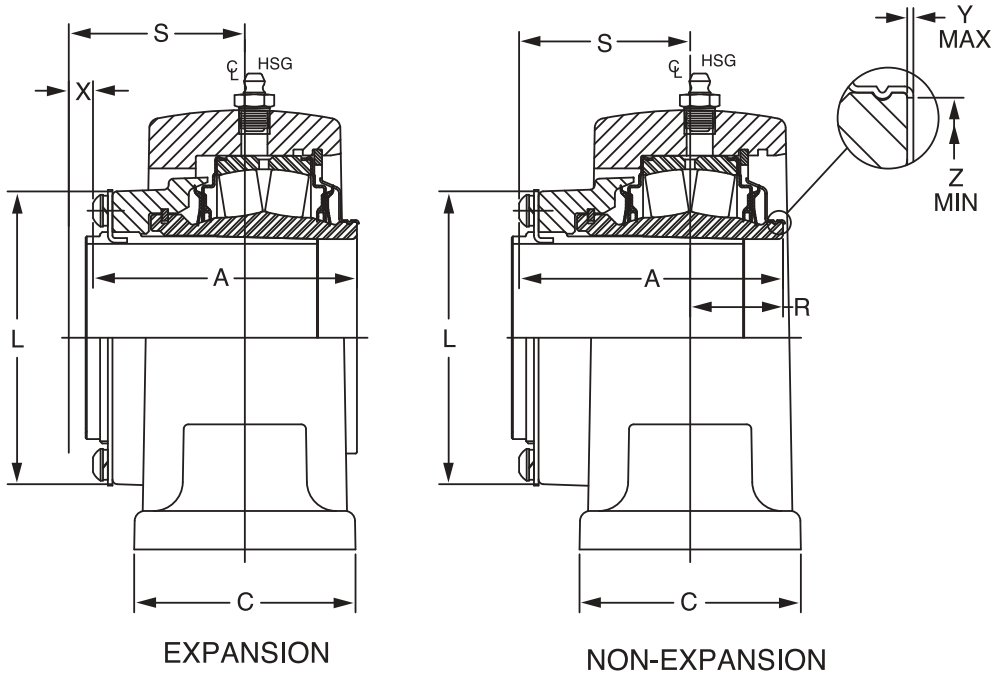

EXPANSION

NON-EXPANSION

NOTE: See page B14-34 for 1-3/8 thru 2-3/16 inch



IMPERIAL - IP Pillow Block with Type E Dimensions
2-1/4 THRU 3-1/2 INCH 2-BOLT

Bearing Series	Shaft Size*	TRIDENT Seal				Labyrinth SEAL			
		Non-Expansion		Expansion		Non-Expansion		Expansion	
		Part No.	Part Name	Part No.	Part Name	Part No.	Part Name	Part No.	Part Name
22213	2-1/4	**071130**	EP2B-IP-204R	**071151**	EP2B-IP-204RE	**071172**	EP2B-IP-204L	**071193**	EP2B-IP-204LE
	2-7/16	**071131**	EP2B-IP-207R	**071152**	EP2B-IP-207RE	**071173**	EP2B-IP-207L	**071194**	EP2B-IP-207LE
	2-1/2	**071132**	EP2B-IP-208R	**071153**	EP2B-IP-208RE	**071174**	EP2B-IP-208L	**071195**	EP2B-IP-208LE
22215	2-11/16	**071133**	EP2B-IP-211R	**071154**	EP2B-IP-211RE	**071175**	EP2B-IP-211L	**071196**	EP2B-IP-211LE
	2-3/4	**071134**	EP2B-IP-212R	**071155**	EP2B-IP-212RE	**071176**	EP2B-IP-212L	**071197**	EP2B-IP-212LE
	2-15/16	**071135**	EP2B-IP-215R	**071156**	EP2B-IP-215RE	**071177**	EP2B-IP-215L	**071198**	EP2B-IP-215LE
	3	**071136**	EP2B-IP-300R	**071157**	EP2B-IP-300RE	**071178**	EP2B-IP-300L	**071199**	EP2B-IP-300LE
22218	3-3/16	**071137**	EP2B-IP-303R	**071158**	EP2B-IP-303RE	**071179**	EP2B-IP-303L	**071200**	EP2B-IP-303LE
	3-1/4	**071138**	EP2B-IP-304R	**071159**	EP2B-IP-304RE	**071180**	EP2B-IP-304L	**071201**	EP2B-IP-304LE
	3-7/16	**071139**	EP2B-IP-307R	**071160**	EP2B-IP-307RE	**071181**	EP2B-IP-307L	**071202**	EP2B-IP-307LE
	3-1/2	**071140**	EP2B-IP-308R	**071161**	EP2B-IP-308RE	**071182**	EP2B-IP-308L	**071203**	EP2B-IP-308LE

*Consult Dodge For Sizes Not Listed

Shaft Size	A	B #	C #	D		F Bolt Dia.	G #	H #	J #	L	M	R	S	X Total Exp.	Y	Z
				Min	Max											
2-1/4 2-7/16 2-1/2	3.42	10.50	2.87	8.38	8.62	5/8	0.88	1.63	5.71	3.88	2.750	1.20	2.22	1/4	0.03	2.95
2-11/16 2-3/4 2-15/16 3	3.50	12.00	2.99	9.31	9.69	3/4	1.07	1.88	6.32	4.28	3.125	1.35	2.15	1/4	0.03	3.47
3-3/16 3-1/4 3-7/16 3-1/2	4.17	14.00	3.49	10.81	11.19	7/8	1.19	2.25	7.69	5.00	3.750	1.51	2.66	1/4	0.03	4.05

Notes: "A" And "R" Dimensions Do Not Include "Y" Dimension
Reference Dimension Only

FEATURES/BENEFITS PAGE B14-2	SPECIFICATIONS PAGE B14-5	HOW TO ORDER/NOMENCLATUE PAGE B14-8	SELECTION PAGE B14-14

DIMENSIONS

Steel IMPERIAL-HD Pillow Block 2-Bolt

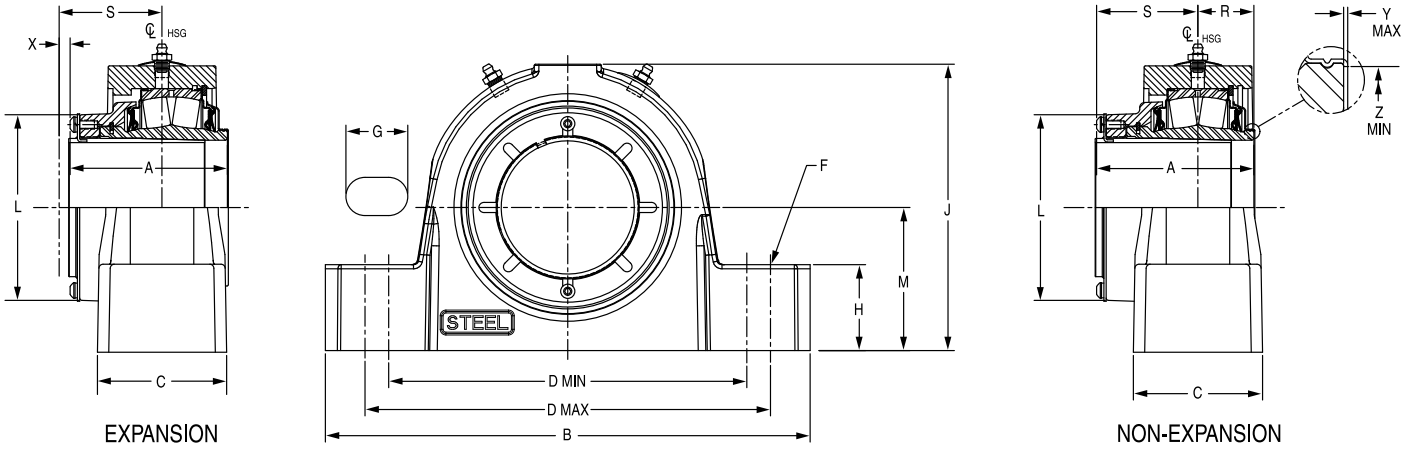

Shaft Size	Dodge Non-Expansion		Dodge Expansion	
	Part No.	Description	Part No.	Description
1-1/8	**071650**	SP2B-IP-102R	**071678**	SP2B-IP-102RE
1-3/16	**071651**	SP2B-IP-103R	**071679**	SP2B-IP-103RE
1-1/4	**071652**	SP2B-IP-104R	**071680**	SP2B-IP-104RE
1-3/8	**071653**	SP2B-IP-106R	**071681**	SP2B-IP-106RE
1-7/16	**071654**	SP2B-IP-107R	**071682**	SP2B-IP-107RE
1-1/2	**071655**	SP2B-IP-108R	**071683**	SP2B-IP-108RE
1-5/8	**071656**	SP2B-IP-110R	**071684**	SP2B-IP-110RE
1-11/16	**071657**	SP2B-IP-111R	**071685**	SP2B-IP-111RE
1-3/4	**071658**	SP2B-IP-112R	**071686**	SP2B-IP-112RE
1-7/8	**071659**	SP2B-IP-114R	**071687**	SP2B-IP-114RE
1-15/16	**071660**	SP2B-IP-115R	**071688**	SP2B-IP-115RE
2	**071661**	SP2B-IP-200R	**071689**	SP2B-IP-200RE
2-3/16	**071662**	SP2B-IP-203R	**071690**	SP2B-IP-203RE
2-1/4	**071663**	SP2B-IP-204R	**071691**	SP2B-IP-204RE
2-3/8	**071664**	SP2B-IP-206R	**071692**	SP2B-IP-206RE
2-7/16	**071665**	SP2B-IP-207R	**071693**	SP2B-IP-207RE
2-1/2	**071666**	SP2B-IP-208R	**071694**	SP2B-IP-208RE
2-11/16	**071667**	SP2B-IP-211R	**071695**	SP2B-IP-211RE
2-3/4	**071668**	SP2B-IP-212R	**071696**	SP2B-IP-212RE
2-15/16	**071669**	SP2B-IP-215R	**071697**	SP2B-IP-215RE
3	**071670**	SP2B-IP-300R	**071698**	SP2B-IP-300RE
3-3/16	**071671**	SP2B-IP-303R	**071699**	SP2B-IP-303RE
3-1/4	**071672**	SP2B-IP-304R	**071700**	SP2B-IP-304RE
3-7/16	**071673**	SP2B-IP-307R	**071701**	SP2B-IP-307RE
3-1/2	**071674**	SP2B-IP-308R	**071702**	SP2B-IP-308RE
3-11/16	**071675**	SP2B-IP-311R	**071703**	SP2B-IP-311RE
3-15/16	**071676**	SP2B-IP-315R	**071704**	SP2B-IP-315RE
4	**071677**	SP2B-IP-400R	**071705**	SP2B-IP-400RE

DIMENSIONS

Steel IMPERIAL-HD Pillow Block 2-Bolt

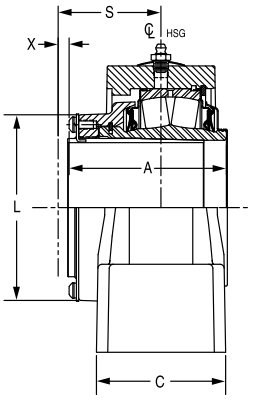

EXPANSION

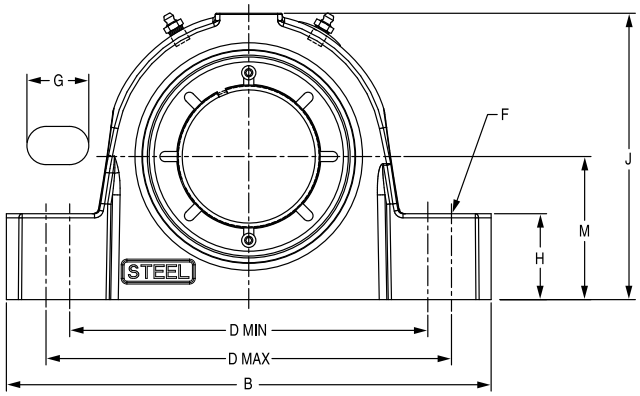

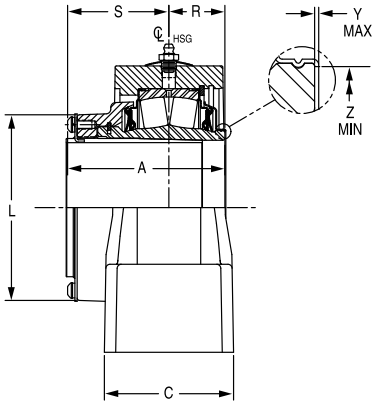

NON-EXPANSION

Shaft Size	A	B	C	D		F Bolt Dia.	G	H	J	L	M	R	S	X Total Exp	Y	Z
				Min	Max											
1-1/8 1-3/16 1-1/4 1-3/8 1-7/16 1-1/2	2.63	6.88	2.25	4.69	6.00	1/2	1.28	1.13	3.88	2.72	1.875	0.86	1.77	3/16	0.02	1.80
1-5/8 1-11/16 1-3/4	2.81	7.13	2.37	5.25	5.75	1/2	0.88	1.25	4.27	3.00	2.125	0.92	1.89	1/4	0.02	2.08
1-7/8 1-15/16 2	2.86	8.38	2.44	5.93	6.36	5/8	0.97	1.31	4.56	3.28	2.25	0.90	1.96	1/4	0.02	2.30
2-3/16 2-1/4	3.03	8.88	2.50	6.50	7.06	5/8	1.04	1.50	5.00	3.50	2.50	0.99	2.04	1/4	0.03	2.59
2-3/8 2-7/16 2-1/2	3.42	9.25	2.90	6.81	7.43	5/8	1.07	1.63	5.60	3.88	2.75	1.17	2.25	1/4	0.03	2.94
2-11/16 2-3/4 2-15/16 3	3.50	10.44	2.91	7.70	8.40	3/4	1.23	1.88	6.38	4.28	3.25	1.12	2.37	1/4	0.03	3.47
3-3/16 3-1/4 3-7/16 3-1/2	4.17	13.00	3.41	9.25	10.75	7/8	1.75	2.25	7.50	5.00	3.75	1.53	2.63	1/4	0.03	4.05
3-11/16 3-15/16 4	4.70	14.25	3.89	10.04	12.60	1	2.40	2.44	8.37	5.56	4.25	1.70	3.00	5/16	0.03	4.50

"A" & "R" Dimensions Do Not Include "Y" Dimension

FEATURES/BENEFITS PAGE B14-2	SPECIFICATIONS PAGE B14-5	HOW TO ORDER/NOMENCLATUE PAGE B14-8	SELECTION PAGE B14-14

DIMENSIONS

Steel IMPERIAL-HD Pillow Block 2-Bolt with Type E Dimensions

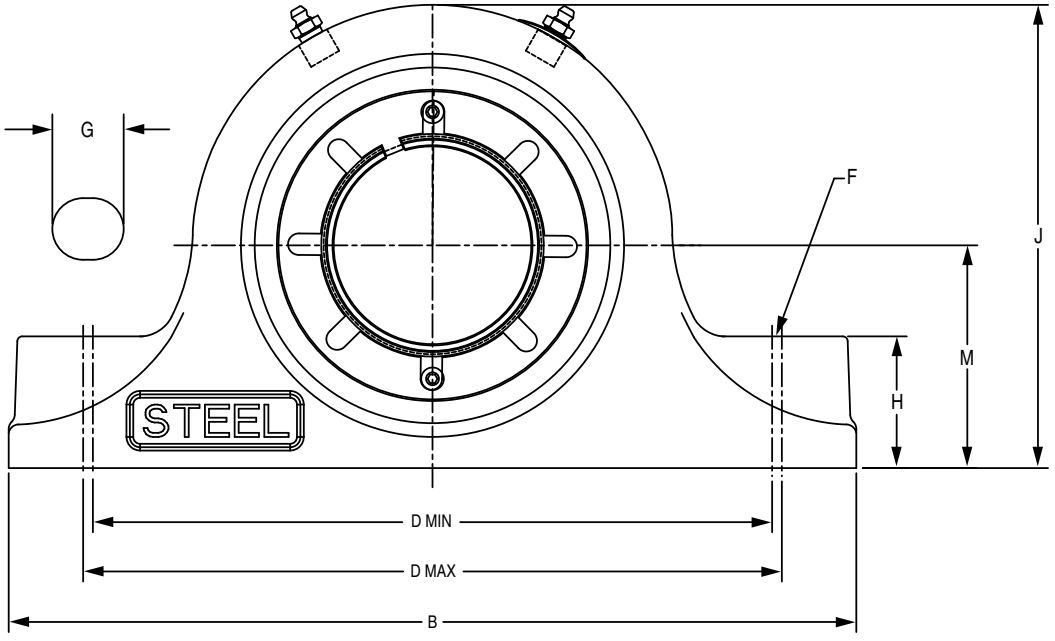

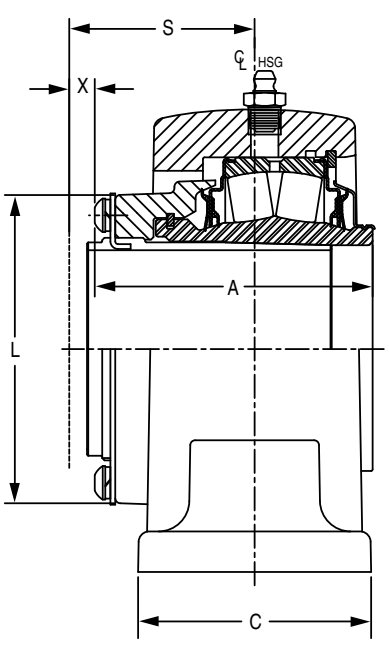

EXPANSION

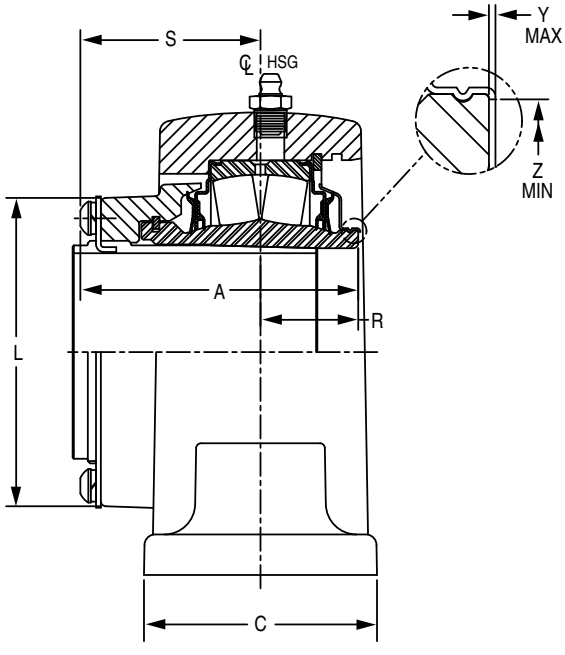

NON-EXPANSION

DIMENSIONS



Steel IMPERIAL-HD Pillow Block 2-Bolt with Type E Dimensions

Shaft Size	Dodge Non-Expansion		Dodge Expansion	
	Part No.	Description	Part No.	Description
1-3/8	**071864**	SEP2B-IP-106R	**071885**	SEP2B-IP-106RE
1-7/16	**071865**	SEP2B-IP-107R	**071886**	SEP2B-IP-107RE
1-1/2	**071866**	SEP2B-IP-108R	**071887**	SEP2B-IP-108RE
1-5/8	**071867**	SEP2B-IP-110R	**071888**	SEP2B-IP-110RE
1-11/16	**071868**	SEP2B-IP-111R	**071889**	SEP2B-IP-111RE
1-3/4	**071869**	SEP2B-IP-112R	**071890**	SEP2B-IP-112RE
1-7/8	**071870**	SEP2B-IP-114R	**071891**	SEP2B-IP-114RE
1-15/16	**071871**	SEP2B-IP-115R	**071892**	SEP2B-IP-115RE
2	**071872**	SEP2B-IP-200R	**071893**	SEP2B-IP-200RE
2-3/16	**071873**	SEP2B-IP-203R	**071894**	SEP2B-IP-203RE
2-1/4	**071874**	SEP2B-IP-204R	**071895**	SEP2B-IP-204RE
2-7/16	**071875**	SEP2B-IP-207R	**071896**	SEP2B-IP-207RE
2-1/2	**071876**	SEP2B-IP-208R	**071897**	SEP2B-IP-208RE
2-11/16	**071877**	SEP2B-IP-211R	**071898**	SEP2B-IP-211RE
2-3/4	**071878**	SEP2B-IP-212R	**071899**	SEP2B-IP-212RE
2-15/16	**071879**	SEP2B-IP-215R	**071900**	SEP2B-IP-215RE
3	**071880**	SEP2B-IP-300R	**071901**	SEP2B-IP-300RE
3-3/16	**071881**	SEP2B-IP-303R	**071902**	SEP2B-IP-303RE
3-1/4	**071882**	SEP2B-IP-304R	**071903**	SEP2B-IP-304RE
3-7/16	**071883**	SEP2B-IP-307R	**071904**	SEP2B-IP-307RE
3-1/2	**071884**	SEP2B-IP-308R	**071905**	SEP2B-IP-308RE

Shaft Size	A	B	C	D		F Bolt Dia	G	H	J	L	M	R	S	X Total Exp	Y	Z
				Min	Max											
1-3/8 1-7/16	2.63	6.88	2.25	4.69	5.88	1/2	1.22	1.13	3.84	2.72	1.875	1.04	1.59	5/32	0.02	1.80
1-1/2 1-5/8 1-11/16	2.81	7.88	2.38	5.7	6.5	1/2	1.02	1.25	4.26	3	2.125	0.96	1.83	3/16	0.02	2.08
1-3/4 1-7/8 1-15/16 2	2.86	8.88	2.44	6	7.12	5/8	1.32	1.31	4.47	3.28	2.250	1.10	1.76	3/32	0.02	2.30
2-3/16	3.03	9.63	2.50	6.50	7.88	5/8	1.45	1.50	.00	3.50	2.500	1.06	1.97	1/4	0.03	2.60
2-1/4 2-7/16 2-1/2	3.42	10.25	2.9	6.88	8.62	5/8	1.63	1.63	5.71	3.88	2.75	1.2	2.22	1/4	0.03	2.95
2-11/16 2-3/4 2-15/16 3	3.50	11.63	2.91	7.88	9.62	3/4	1.75	1.88	6.32	4.28	3.125	1.35	2.15	1/4	0.03	3.47
3-3/16 3-1/4 3-7/16 3-1/2	4.17	13.5	3.41	9.38	11.25	7/8	1.94	2.25	7.69	5	3.75	1.51	2.66	1/4	0.03	4.05

"A" & "R" Dimensions Do Not Include 'Y' Dimension

FEATURES/BENEFITS PAGE B14-2	SPECIFICATIONS PAGE B14-5	HOW TO ORDER/NOMENCLATUE PAGE B14-8	SELECTION PAGE B14-14

DIMENSIONS

IMPERIAL - IP Pillow Block
2-3/8 THRU 3-1/2 INCH - 4-BOLT

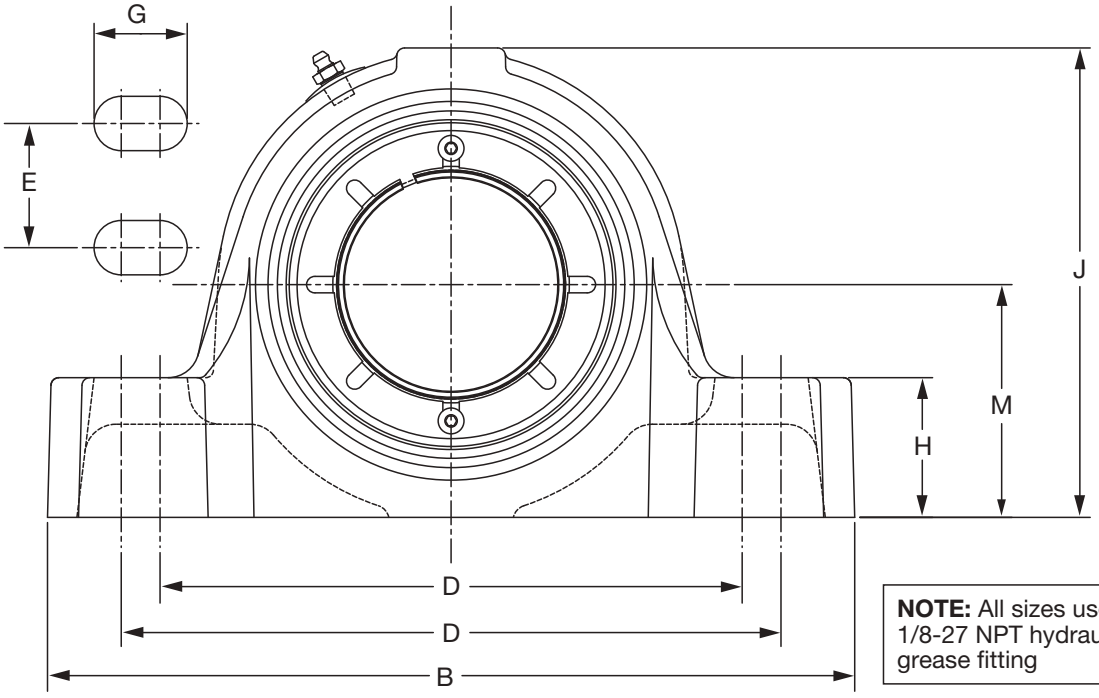

NOTE: All sizes use a 1/8-27 NPT hydraulic grease fitting

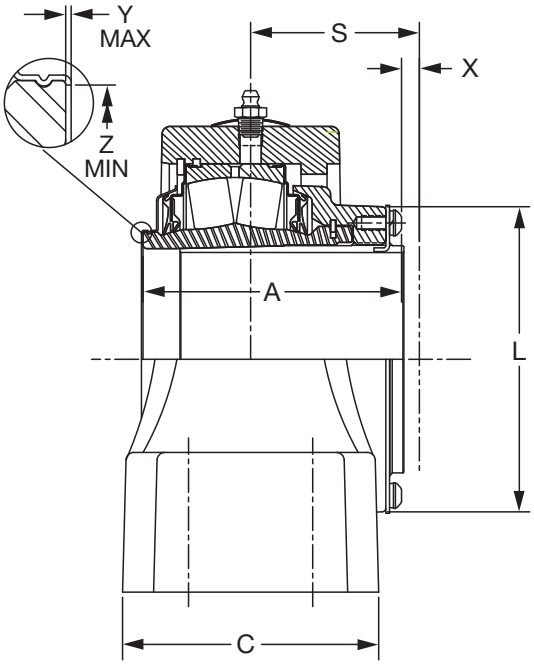

EXPANSION

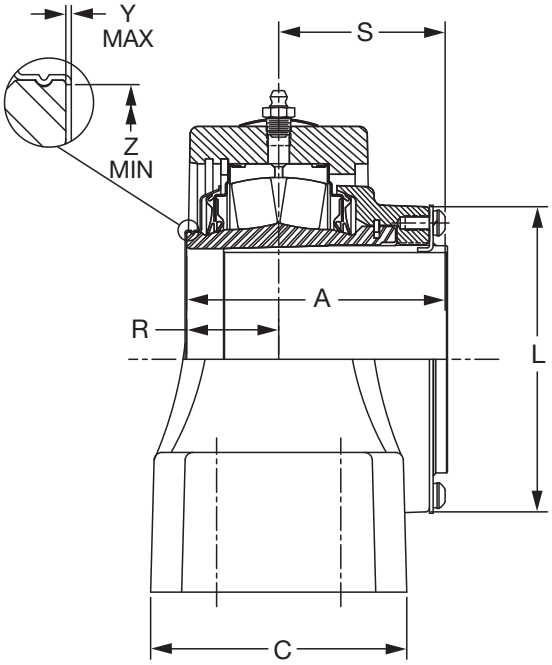

NON-EXPANSION

NOTE: See page B14-44 for 3-11/16 thru 5 inch

FEATURES/BENEFITS PAGE B14-2	SPECIFICATIONS PAGE B14-5	HOW TO ORDER/NOMENCLATUE PAGE B14-8	SELECTION PAGE B14-14



DIMENSIONS

IMPERIAL - IP Pillow Block
2-3/8 THRU 3-1/2 INCH - 4-BOLT

Bearing	Shaft Size Inch	TRIDENT Seal				Labyrinth Seal			
		Non-Expansion		Expansion		Non-Expansion		Expansion	
		Part No.	Part Name	Part No.	Part Name	Part No.	Part Name	Part No.	Part Name
22213	2-3/8	**069520**	P4B-IP-206R	**069538**	P4B-IP-206RE	**069556**	P4B-IP-206L	**069574**	P4B-IP-206LE
	2-7/16	**069521**	P4B-IP-207R	**069539**	P4B-IP-207RE	**069557**	P4B-IP-207L	**069575**	P4B-IP-207LE
	2-1/2	**069522**	P4B-IP-208R	**069540**	P4B-IP-208RE	**069558**	P4B-IP-208L	**069576**	P4B-IP-208LE
22215	2-11/16	**069523**	P4B-IP-211R	**069541**	P4B-IP-211RE	**069559**	P4B-IP-211L	**069577**	P4B-IP-211LE
	2-3/4	**069524**	P4B-IP-212R	**069542**	P4B-IP-212RE	**069560**	P4B-IP-212L	**069578**	P4B-IP-212LE
	2-15/16	**069525**	P4B-IP-215R	**069543**	P4B-IP-215RE	**069561**	P4B-IP-215L	**069579**	P4B-IP-215LE
	3	**069526**	P4B-IP-300R	**069544**	P4B-IP-300RE	**069562**	P4B-IP-300L	**069580**	P4B-IP-300LE
22218	3-3/16	**069527**	P4B-IP-303R	**069545**	P4B-IP-303RE	**069563**	P4B-IP-303L	**069581**	P4B-IP-303LE
	3-1/4	**069528**	P4B-IP-304R	**069546**	P4B-IP-304RE	**069564**	P4B-IP-304L	**069582**	P4B-IP-304LE
	3-7/16	**069529**	P4B-IP-307R	**069547**	P4B-IP-307RE	**069565**	P4B-IP-307L	**069583**	P4B-IP-307LE
	3-1/2	**069530**	P4B-IP-308R	**069548**	P4B-IP-308RE	**069566**	P4B-IP-308L	**069584**	P4B-IP-308LE

Metric shaft sizes available upon request

Shaft Size	A	B	C	D		E	F Bolt Dia.	G	H	J	L	M	R	S	X Total Exp.	Y	Z
				Min	Max												
2-3/8 2-7/16 2-1/2	3.42	9.25	3.28	6.94	7.31	1.75	1/2	0.81	1.63	5.59	3.88	2.75	1.08	2.34	1/4	0.03	2.94
2-11/16 2-3/4 2-15/16 3	3.50	10.44	3.75	7.94	8.31	1.88	5/8	0.94	1.88	6.44	4.28	3.25	1.09	2.41	1/4	0.03	3.47
3-3/16 3-1/4 3-7/16 3-1/2	4.17	13.00	4.13	9.38	10.63	2.00	3/4	1.50	2.25	7.56	5.00	3.75	1.44	2.73	1/4	0.03	4.05

FEATURES/BENEFITS PAGE B14-2	SPECIFICATIONS PAGE B14-5	HOW TO ORDER/NOMENCLATUE PAGE B14-8	SELECTION PAGE B14-14

DIMENSIONS

IMPERIAL - IP Pillow Block
3-11/16 THRU 5 INCH - 4-BOLT

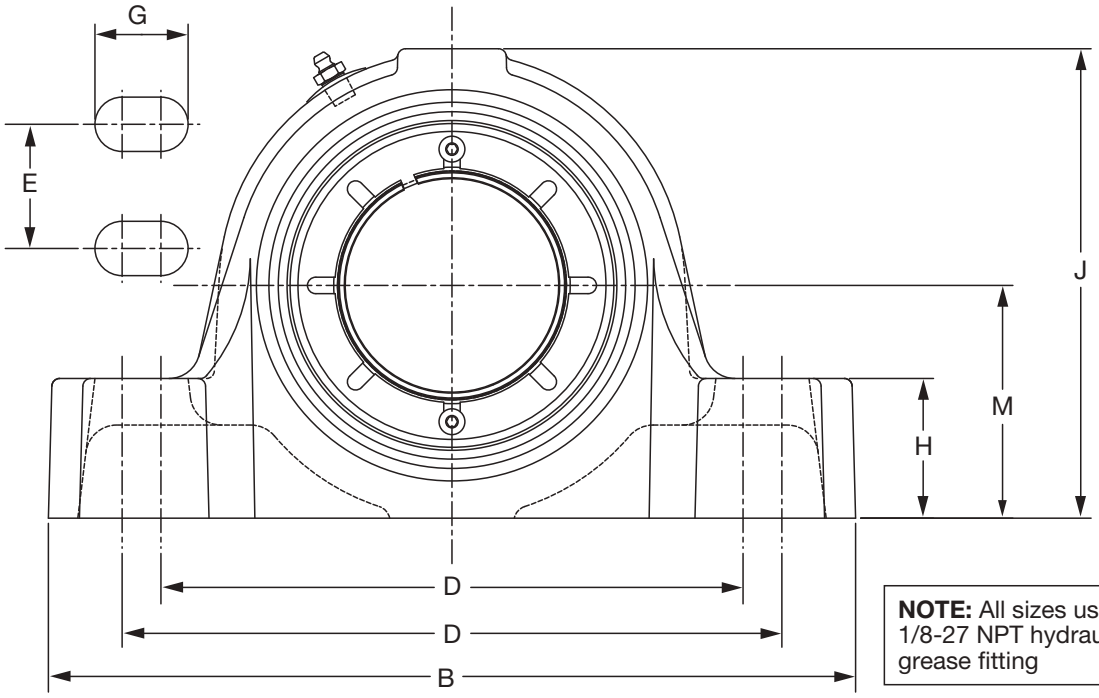

NOTE: All sizes use a 1/8-27 NPT hydraulic grease fitting

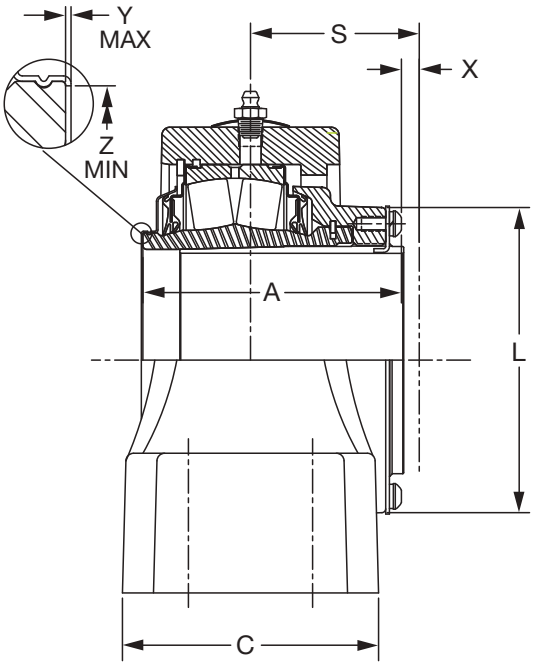

EXPANSION

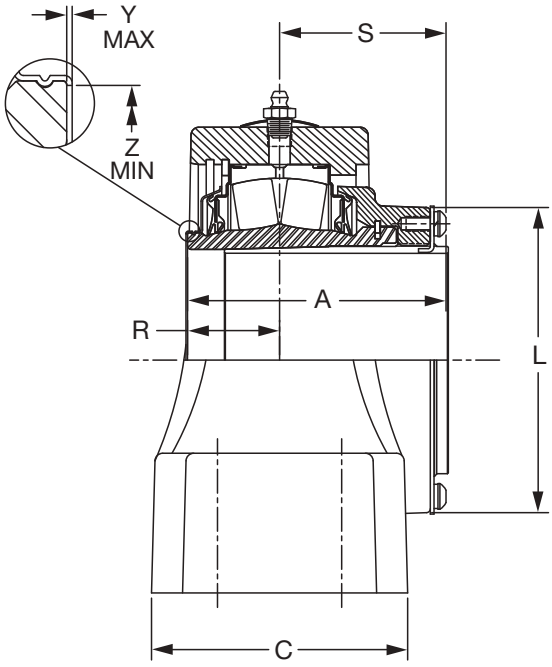

NON-EXPANSION

NOTE: See page B14-42 for 2-3/8 thru 3-1/2 inch



IMPERIAL - IP Pillow Block
3-11/16 THRU 5 INCH - 4-BOLT

Bearing	Shaft Size Inch	TRIDENT Seal				Labyrinth Seal			
		Non-Expansion		Expansion		Non-Expansion		Expansion	
		Part No.	Part Name	Part No.	Part Name	Part No.	Part Name	Part No.	Part Name
22220	3-11/16	**069531**	P4B-IP-311R	**069549**	P4B-IP-311RE	**069567**	P4B-IP-311L	**069585**	P4B-IP-311LE
	3-15/16	**069532**	P4B-IP-315R	**069550**	P4B-IP-315RE	**069568**	P4B-IP-315L	**069586**	P4B-IP-315LE
	4	**069533**	P4B-IP-400R	**069551**	P4B-IP-400RE	**069569**	P4B-IP-400L	**069587**	P4B-IP-400LE
22222	4-7/16	**069534**	P4B-IP-407R	**069552**	P4B-IP-407RE	**069570**	P4B-IP-407L	**069588**	P4B-IP-407LE
	4-1/2	**069535**	P4B-IP-408R	**069553**	P4B-IP-408RE	**069571**	P4B-IP-408L	**069589**	P4B-IP-408LE
22226	4-15/16	**069536**	P4B-IP-415R	**069554**	P4B-IP-415RE	**069572**	P4B-IP-415L	**069590**	P4B-IP-415LE
	5	**069537**	P4B-IP-500R	**069555**	P4B-IP-500RE	**069573**	P4B-IP-500L	**069591**	P4B-IP-500LE

Metric shaft sizes available upon request

Shaft Size	A	B	C	D		E	F Bolt Dia.	G	H	J	L	M	R	S	X Total Exp.	Y	Z
				Min	Max												
3-11/16 3-15/16 4	4.70	15.25	4.50	12.13	12.88	2.25	3/4	1.25	2.44	8.44	5.56	4.25	1.64	3.06	5/16	0.03	4.50
4-7/16 4-1/2	5.23	16.50	4.75	12.00	14.00	2.50	3/4	1.38	2.75	9.63	6.44	4.75	1.75	3.48	3/8	0.04	5.00
4-15/16 5	5.98	18.63	5.38	15.00	16.00	2.75	7/8	1.50	3.00	11.13	7.63	5.50	1.91	4.08	3/8	0.04	5.84

FEATURES/BENEFITS PAGE B14-2	SPECIFICATIONS PAGE B14-5	HOW TO ORDER/NOMENCLATUE PAGE B14-8	SELECTION PAGE B14-14

DIMENSIONS

IMPERIAL - IP Pillow Block with Type E Dimensions
2-1/4 THRU 7 INCH - 4-BOLT

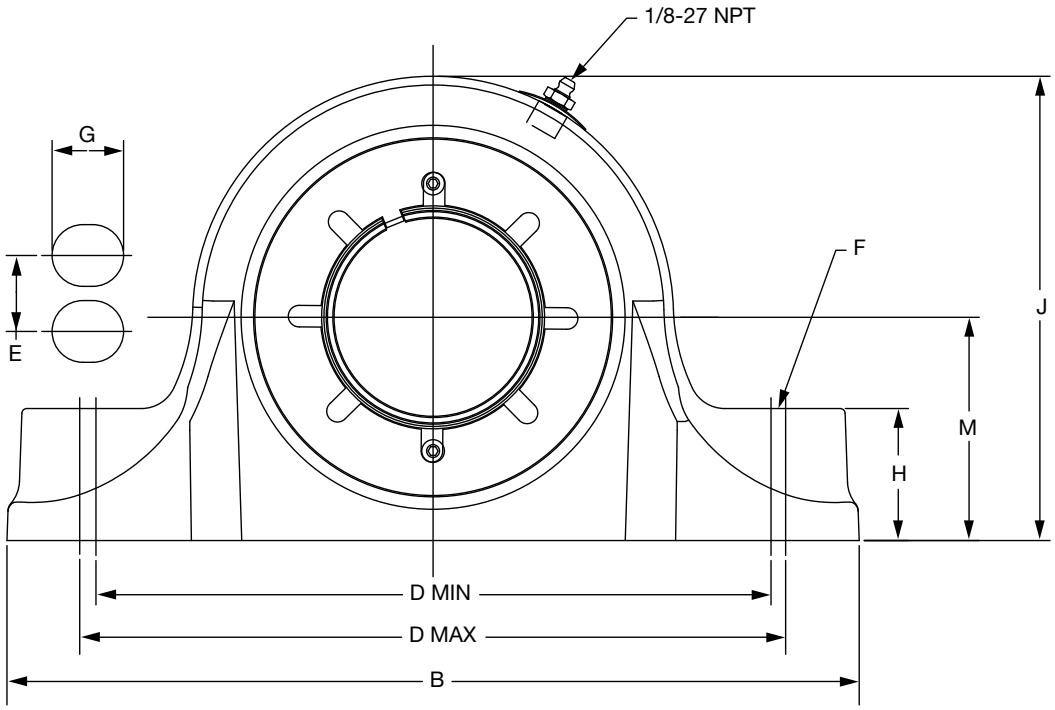

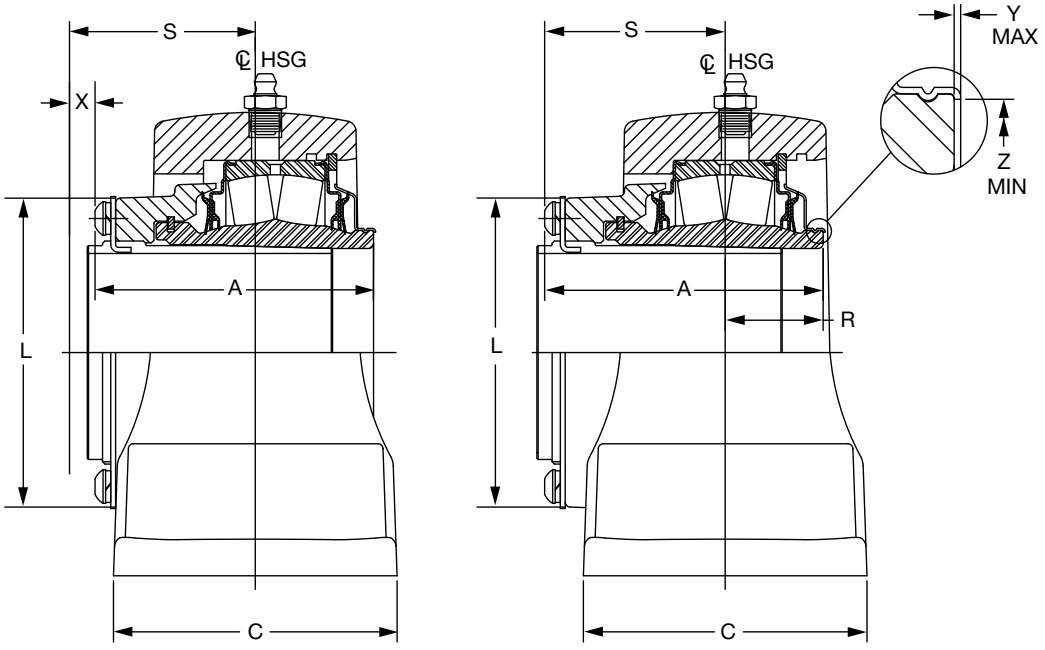

EXPANSION

NON-EXPANSION



IMPERIAL - IP Pillow Block with Type E Dimensions
2-1/4 THRU 7 INCH - 4-BOLT

Bearing Series	Shaft Size*	TRIDENT Seal				Labyrinth Seal			
		Non-Expansion		Expansion		Non-Expansion		Expansion	
		Part No.	Part Name	Part No.	Part Name	Part No.	Part Name	Part No.	Part Name
22213	2-1/4	**071204**	EP4B-IP-204R	**071221**	EP4B-IP-204RE	**071238**	EP4B-IP-204L	**071255**	EP4B-IP-204LE
	2-7/16	**071205**	EP4B-IP-207R	**071222**	EP4B-IP-207RE	**071239**	EP4B-IP-207L	**071256**	EP4B-IP-207LE
	2-1/2	**071206**	EP4B-IP-208R	**071223**	EP4B-IP-208RE	**071240**	EP4B-IP-208L	**071257**	EP4B-IP-208LE
22215	2-11/16	**071207**	EP4B-IP-211R	**071224**	EP4B-IP-211RE	**071241**	EP4B-IP-211L	**071258**	EP4B-IP-211LE
	2-3/4	**071208**	EP4B-IP-212R	**071225**	EP4B-IP-212RE	**071242**	EP4B-IP-212L	**071259**	EP4B-IP-212LE
	2-15/16	**071209**	EP4B-IP-215R	**071226**	EP4B-IP-215RE	**071243**	EP4B-IP-215L	**071260**	EP4B-IP-215LE
	3	**071210**	EP4B-IP-300R	**071227**	EP4B-IP-300RE	**071244**	EP4B-IP-300L	**071261**	EP4B-IP-300LE
22218	3-3/16	**071211**	EP4B-IP-303R	**071228**	EP4B-IP-303RE	**071245**	EP4B-IP-303L	**071262**	EP4B-IP-303LE
	3-1/4	**071212**	EP4B-IP-304R	**071229**	EP4B-IP-304RE	**071246**	EP4B-IP-304L	**071263**	EP4B-IP-304LE
	3-7/16	**071213**	EP4B-IP-307R	**071230**	EP4B-IP-307RE	**071247**	EP4B-IP-307L	**071264**	EP4B-IP-307LE
	3-1/2	**071214**	EP4B-IP-308R	**071231**	EP4B-IP-308RE	**071248**	EP4B-IP-308L	**071265**	EP4B-IP-308LE
22220	3-15/16	**071215**	EP4B-IP-315R	**071232**	EP4B-IP-315RE	**071249**	EP4B-IP-315L	**071266**	EP4B-IP-315LE
	4	**071216**	EP4B-IP-400R	**071233**	EP4B-IP-400RE	**071250**	EP4B-IP-400L	**071267**	EP4B-IP-400LE
22222	4-7/16	**071217**	EP4B-IP-407R	**071234**	EP4B-IP-407RE	**071251**	EP4B-IP-407L	**071268**	EP4B-IP-407LE
	4-1/2	**071218**	EP4B-IP-408R	**071235**	EP4B-IP-408RE	**071252**	EP4B-IP-408L	**071269**	EP4B-IP-408LE
22226	4-15/16	**071219**	EP4B-IP-415R	**071236**	EP4B-IP-415RE	**071253**	EP4B-IP-415L	**071270**	EP4B-IP-415LE
	5	**071220**	EP4B-IP-500R	**071237**	EP4B-IP-500RE	**071254**	EP4B-IP-500L	**071271**	EP4B-IP-500LE
22228	5-7/16	**071610**	EP4B-IP-507R	**071618**	EP4B-IP-507RE	**071626**	EP4B-IP-507L	**071634**	EP4B-IP-507LE
	5-1/2	**071611**	EP4B-IP-508R	**071619**	EP4B-IP-508RE	**071627**	EP4B-IP-508L	**071635**	EP4B-IP-508LE
22232	5-15/16	**071612**	EP4B-IP-515R	**071620**	EP4B-IP-515RE	**071628**	EP4B-IP-515L	**071636**	EP4B-IP-515LE
	6	**071613**	EP4B-IP-600R	**071621**	EP4B-IP-600RE	**071629**	EP4B-IP-600L	**071637**	EP4B-IP-600LE
22236	6-7/16	**071614**	EP4B-IP-607R	**071622**	EP4B-IP-607RE	**071630**	EP4B-IP-607L	**071638**	EP4B-IP-607LE
	6-1/2	**071615**	EP4B-IP-608R	**071623**	EP4B-IP-608RE	**071631**	EP4B-IP-608L	**071639**	EP4B-IP-608LE
	6-15/16	**071616**	EP4B-IP-615R	**071624**	EP4B-IP-615RE	**071632**	EP4B-IP-615L	**071640**	EP4B-IP-615LE
	7	**071617**	EP4B-IP-700R	**071625**	EP4B-IP-700RE	**071633**	EP4B-IP-700L	**071641**	EP4B-IP-700LE

*Consult Dodge For Sizes Not Listed

Shaft Size	A	B#	C#	D		E	F Bolt Dia.	G#	H#	J#	L	M	R	S	X Total Exp.	Y	Z
				Min	Max												
2-1/4 2-7/16 2-1/2	3.42	10.50	3.49	8.31	8.69	1.87	5/8	0.87	1.63	5.72	3.88	2.75	1.21	2.21	1/4	0.03	2.94
2-11/16 2-3/4 2-15/16 3	3.50	12.00	4.00	9.18	9.82	2.13	5/8	1.00	1.88	6.33	4.28	3.13	1.35	2.15	1/4	0.03	3.47
3-3/16 3-1/4 3-7/16 3-1/2	4.17	13.50	4.49	10.75	11.25	2.37	3/4	1.13	2.25	7.69	5.00	3.75	1.54	2.63	1/4	0.03	4.05
3-15/16 4	4.70	15.25	4.50	12.25	12.75	2.25	3/4	1.13	2.44	8.70	5.56	4.25	1.35	3.35	5/16	0.03	4.50
4-7/16 4-1/2	5.23	16.63	4.63	13.25	13.75	2.50	3/4	1.13	2.75	9.67	6.44	4.75	1.82	3.41	3/8	0.04	5.00
4-15/16 5	5.98	18.50	5.13	15.25	15.75	2.87	7/8	1.25	3.00	11.16	7.63	5.50	1.93	4.05	3/8	0.04	5.84
5-7/16 5-1/2	6.17	22	6.25	17.38	19.12	3.75	1	2.00	3.25	13.19	8.75	6.69	1.4	4.77	3/8	0.04	5.92
5-15/16 6	7.08	22	6.25	17.38	19.12	3.75	1	2.00	3.25	13.19	10.25	6.69	2.66	4.42	3/8	0.04	7.02
6-7/16 6-1/2 6-15/16 7	7.39	26	7.12	21.25	23.25	4.62	1	2.00	3.69	14.94	11.41	7.50	2.46	4.94	23/64	0.04	7.89

Notes: "A" And "R" Dimensions Do Not Include "Y" Dimension

Reference Dimension Only

FEATURES/BENEFITS PAGE B14-2	SPECIFICATIONS PAGE B14-5	HOW TO ORDER/NOMENCLATUE PAGE B14-8	SELECTION PAGE B14-14

DIMENSIONS

Steel IMPERIAL-HD Pillow Block 4-Bolt

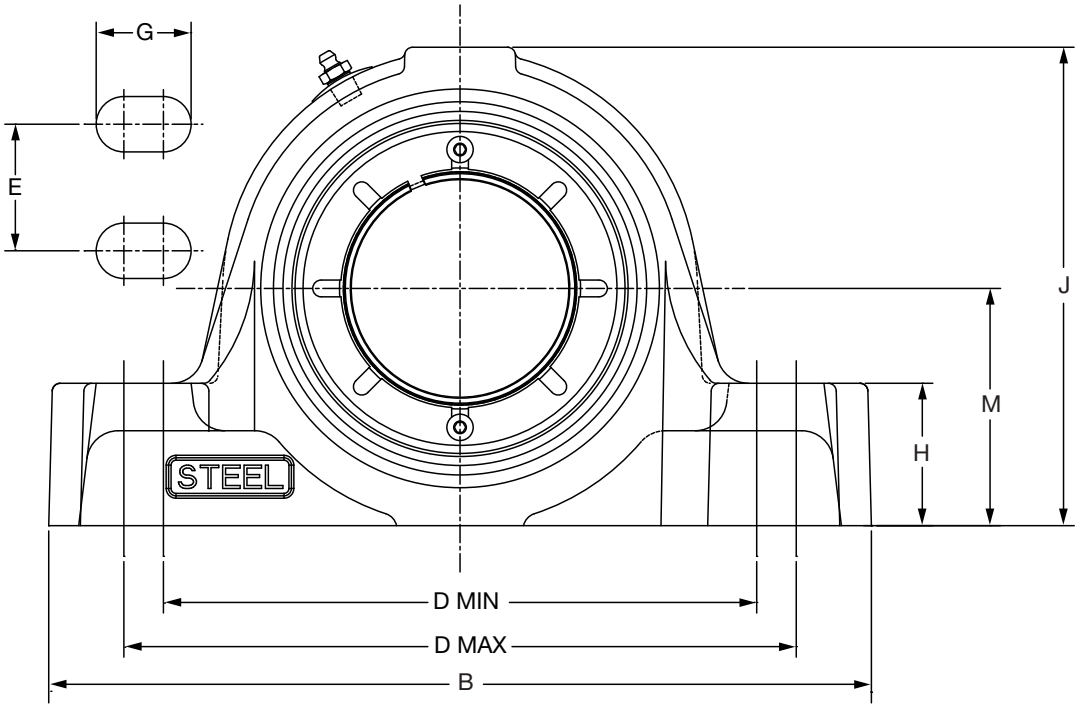

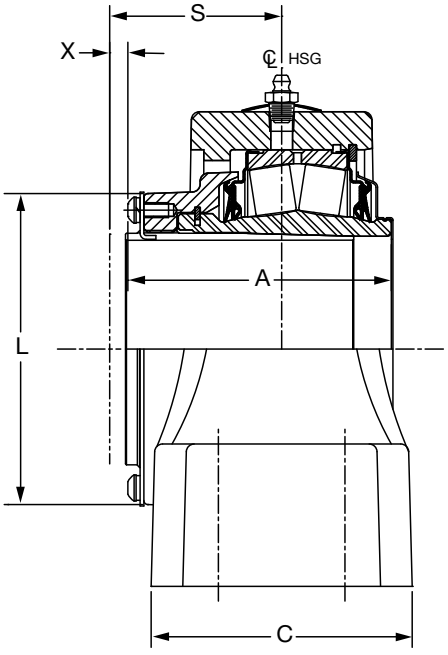

EXPANSION

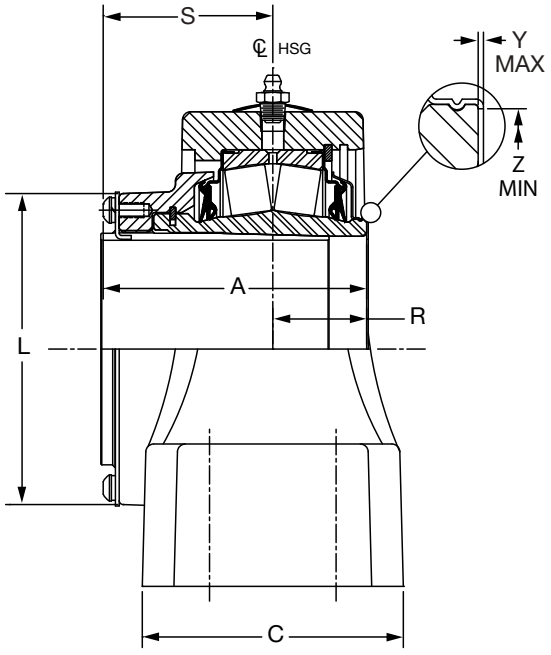

NON-EXPANSION

DIMENSIONS

Steel IMPERIAL-HD Pillow Block 4-Bolt



Shaft Size	Dodge Non-Expansion		Dodge Expansion	
	Dodge Part No.	Description	Dodge Part No.	Description
2-3/8	**071706**	SP4B-IP-206R	**071724**	SP4B-IP-206RE
2-7/16	**071707**	SP4B-IP-207R	**071725**	SP4B-IP-207RE
2-1/2	**071708**	SP4B-IP-208R	**071726**	SP4B-IP-208RE
2-11/16	**071709**	SP4B-IP-211R	**071727**	SP4B-IP-211RE
2-3/4	**071710**	SP4B-IP-212R	**071728**	SP4B-IP-212RE
2-15/16	**071711**	SP4B-IP-215R	**071729**	SP4B-IP-215RE
3	**071712**	SP4B-IP-300R	**071730**	SP4B-IP-300RE
3-3/16	**071713**	SP4B-IP-303R	**071731**	SP4B-IP-303RE
3-1/4	**071714**	SP4B-IP-304R	**071732**	SP4B-IP-304RE
3-7/16	**071715**	SP4B-IP-307R	**071733**	SP4B-IP-307RE
3-1/2	**071716**	SP4B-IP-308R	**071734**	SP4B-IP-308RE
3-11/16	**071717**	SP4B-IP-311R	**071735**	SP4B-IP-311RE
3-15/16	**071718**	SP4B-IP-315R	**071736**	SP4B-IP-315RE
4	**071719**	SP4B-IP-400R	**071737**	SP4B-IP-400RE
4-7/16	**071720**	SP4B-IP-407R	**071738**	SP4B-IP-407RE
4-1/2	**071721**	SP4B-IP-408R	**071739**	SP4B-IP-408RE
4-15/16	**071722**	SP4B-IP-415R	**071740**	SP4B-IP-415RE
5	**071723**	SP4B-IP-500R	**071741**	SP4B-IP-500RE

Shaft Size	A	B	C	D		E	F Bolt Dia	G	H	J	L	M	R	S	X Total Exp	Y	Z
				Min	Max												
2-3/8 2-7/16 2-1/2	3.42	9.25	3.00	6.88	7.63	1.75	1/2	1.06	1.63	5.61	3.88	2.75	1.17	2.25	1/4	0.03	2.94
2-11/16 2-3/4 2-15/16 3	3. 50	10.44	3.13	7.60	9.10	1.88	5/8	1. 43	1.88	6. 44	4. 28	3. 25	1.12	2.37	1/4	0.03	3.47
3-3/16 3-1/4 3-7/16 3-1/2	4.17	12.30	3.75	8.88	10.88	2.00	3/4	1.88	2.25	7.56	5.00	3.75	1.53	2.63	1/4	0.03	4.05
3-11/16 3-15/16 4	4.70	14.88	4.31	10.88	13.38	2.25	3/4	2.13	2.44	8.70	5.56	4.25	1.70	3.00	5/16	0.03	4.50
4-7/16 4-1/2	5.23	16.13	4.75	11.88	14.50	2.50	3/4	2.19	2.75	9.67	6.44	4.75	1.53	3.70	3/8	0.04	5.00
4-15/16 5	5. 98	17.50	5.03	15.13	15. 88	2.75	7/8	1. 38	3.00	11. 12	7. 63	5. 50	2.22	3.77	3/8	0.04	5.84

"A" & "R" Dimensions Do Not Include "Y" Dimension

FEATURES/BENEFITS PAGE B14-2	SPECIFICATIONS PAGE B14-5	HOW TO ORDER/NOMENCLATUE PAGE B14-8	SELECTION PAGE B14-14

DIMENSIONS

Steel IMPERIAL-HD Pillow Block 4-Bolt with Type E Dimensions

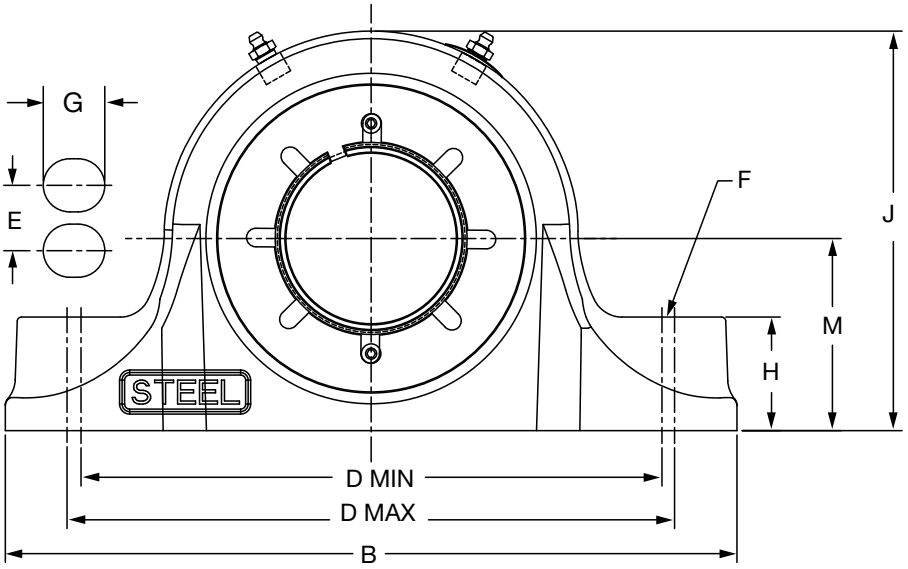

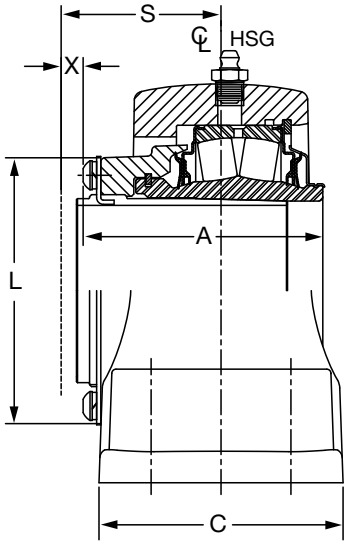

3-11/16" THRU 5"
EXPANSION

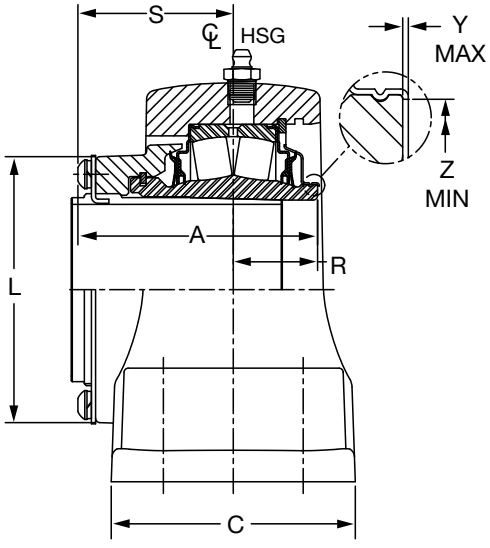

3-11/16" THRU 5"
NON-EXPANSION



Steel IMPERIAL-HD Pillow Block 4-Bolt with Type E Dimensions

Shaft Size	Dodge Non-Expansion		Dodge Expansion	
	Dodge Part No.	Description	Dodge Part No.	Description
2-1/4	**071906**	SEP4B-IP-204R	**071923**	SEP4B-IP-204RE
2-7/16	**071907**	SEP4B-IP-207R	**071924**	SEP4B-IP-207RE
2-1/2	**071908**	SEP4B-IP-208R	**071925**	SEP4B-IP-208RE
2-11/16	**071909**	SEP4B-IP-211R	**071926**	SEP4B-IP-211RE
2-3/4	**071910**	SEP4B-IP-212R	**071927**	SEP4B-IP-212RE
2-15/16	**071911**	SEP4B-IP-215R	**071928**	SEP4B-IP-215RE
3	**071912**	SEP4B-IP-300R	**071929**	SEP4B-IP-300RE
3-3/16	**071913**	SEP4B-IP-303R	**071930**	SEP4B-IP-303RE
3-1/4	**071914**	SEP4B-IP-304R	**071931**	SEP4B-IP-304RE
3-7/16	**071915**	SEP4B-IP-307R	**071932**	SEP4B-IP-307RE
3-1/2	**071916**	SEP4B-IP-308R	**071933**	SEP4B-IP-308RE
3-15/16	**071917**	SEP4B-IP-315R	**071934**	SEP4B-IP-315RE
4	**071918**	SEP4B-IP-400R	**071935**	SEP4B-IP-400RE
4-7/16	**071919**	SEP4B-IP-407R	**071936**	SEP4B-IP-407RE
4-1/2	**071920**	SEP4B-IP-408R	**071937**	SEP4B-IP-408RE
4-15/16	**071921**	SEP4B-IP-415R	**071938**	SEP4B-IP-415RE
5	**071922**	SEP4B-IP-500R	**071939**	SEP4B-IP-500RE

Shaft Size	A	B	C	D		E	F Bolt Dia.	G	H	J	L	M	R	S	X Total Exp	Y	Z
				Min	Max												
2-1/4 2-7/16 2-1/2	3.42	10.25	3.25	7.13	8.75	1.88	5/8	1.57	1.63	5.71	3.88	2.75	1.21	2.21	1/4	0.03	2.94
2-11/16 2-3/4 2-15/16 3	3.50	10.83	3.38	8.00	9.60	2.12	5/8	1.56	1.88	6.32	4.28	3.13	1.35	2.15	1/4	0.03	3.47
3-3/16 3-1/4 3-7/16 3-1/2	4.17	13.63	3.75	9.25	11.25	2.38	3/4	1.88	2.25	7.69	5.00	3.75	1.54	2.63	1/4	0.03	4.05
3-15/16 4	4.70	14.88	4.31	10.88	13.38	2.25	3/4	2.13	2.44	8.70	5.56	4.25	1.70	3.00	5/16	0.03	4.50
4-7/16 4-1/2	5.23	16.13	4.75	11.88	14.50	2.50	3/4	2.19	2.75	9.67	6.44	4.75	1.53	3.70	3/8	0.04	5.00
4-15/16 5	5.98	17.50	5.04	15.13	15.88	2.88	7/8	1.38	3.00	11.16	7.63	5.50	1.93	4.05	3/8	0.04	5.84

"A" & "R" Dimensions Do Not Include 'Y' Dimension

FEATURES/BENEFITS PAGE B14-2	SPECIFICATIONS PAGE B14-5	HOW TO ORDER/NOMENCLATUE PAGE B14-8	SELECTION PAGE B14-14

DIMENSIONS

IMPERIAL ISAF
1-7/16 THRU 3-7/16 INCH - 2-BOLT

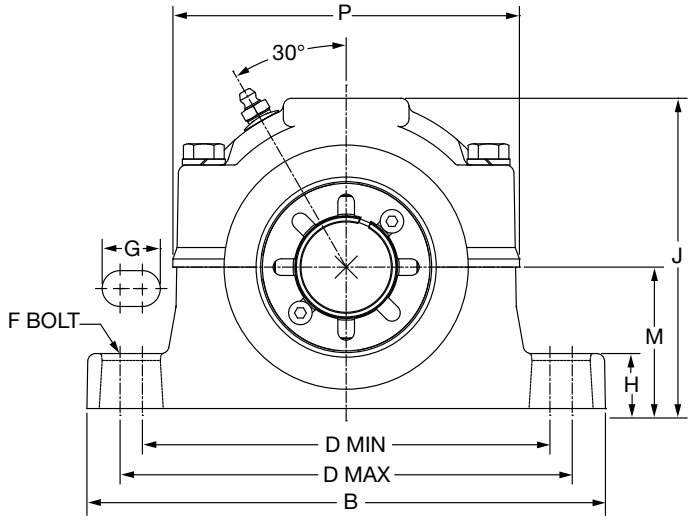

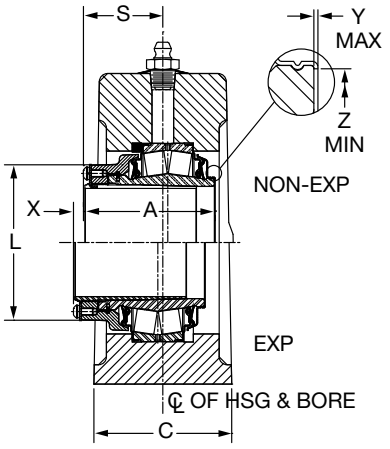

CONTACT SEAL

Bearing	Shaft Size Inch	TRIDENT Seal				Labyrinth Seal			
		Non-Expansion		Expansion		Non-Expansion		Expansion	
		Part No.	Part Name	Part No.	Part Name	Part No.	Part Name	Part No.	Part Name
22208	1-7/16	**070054**	P2B509-ISAF-107R	**070064**	P2B509-ISAF-107RE	**070074**	P2B509-ISAF-107L	**070084**	P2B509-ISAF-107LE
22209	1-11/16	**070055**	P2B510-ISAF-111R	**070065**	P2B510-ISAF-111RE	**070075**	P2B510-ISAF-111L	**070085**	P2B510-ISAF-111LE
22210	1-15/16	**070056**	P2B511-ISAF-115R	**070066**	P2B511-ISAF-115RE	**070076**	P2B511-ISAF-115L	**070086**	P2B511-ISAF-115LE
22211	2-3/16	**070057**	P2B513-ISAF-203R	**070067**	P2B513-ISAF-203RE	**070077**	P2B513-ISAF-203L	**070087**	P2B513-ISAF-203LE
22213	2-7/16	**070951**	P2B515-ISAF-207R	**070955**	P2B515-ISAF-207RE	**070959**	P2B515-ISAF-207L	**070963**	P2B515-ISAF-207LE
22215	2-11/16	**070952**	P2B516-ISAF-211R	**070956**	P2B516-ISAF-211RE	**070960**	P2B516-ISAF-211L	**070964**	P2B516-ISAF-211LE
22215	2-15/16	**070953**	P2B517-ISAF-215R	**070957**	P2B517-ISAF-215RE	**070961**	P2B517-ISAF-215L	**070965**	P2B517-ISAF-215LE
22218	3-7/16	**070954**	P2B520-ISAF-307R	**070958**	P2B520-ISAF-307RE	**070962**	P2B520-ISAF-307L	**070966**	P2B520-ISAF-307LE

Metric shaft sizes available upon request

NOTE: See page B14-54 for 2-7/16 thru 7 inch



IMPERIAL ISAF
1-7/16 THRU 3-7/16 INCH - 2-BOLT

Shaft Size	SAF Series	A	B	C	D		F Bolts	G	H
					Min	Max			
1-7/16	**509**	2.63	8.25	2.19	6.25	7.00	1/2	0.94	0.88
1-11/16	**510**	2.80	8.25	2.38	6.50	7.00	1/2	0.88	1.03
1-15/16	**511**	2.86	9.63	2.75	7.38	8.25	5/8	1.20	1.03
2-3/16	**513**	3.03	11.00	3.25	8.60	9.50	5/8	1.16	1.03
2-7/16	**515**	3.42	11.13	3.13	8.63	9.63	5/8	1.13	1.25
2-11/16	**516**	3.50	12.59	3.50	9.88	11.00	3/4	1.31	1.00
2-15/16	**517**	3.50	12.59	3.50	9.88	11.00	3/4	1.31	1.25
3-7/16	**520**	4.16	15.36	4.34	11.81	13.13	7/8	**1.63**	1.66

Shaft Size	SAF Series	J	L	M	P	S	X Expansion	Y	Z
1-7/16	**509**	4.94	2.72	2.25	5.52	1.53	7/32	0.02	1.80
1-11/16	**510**	5.45	3.00	2.50	5.81	1.73	7/32	0.02	2.08
1-15/16	**511**	5.97	3.28	2.75	6.38	1.73	17/64	0.02	2.30
2-3/16	**513**	6.34	3.50	3.00	6.97	1.88	7/32	0.03	2.59
2-7/16	**515**	6.86	3.86	3.25	7.42	2.06	5/16	0.03	2.94
2-11/16	**516**	7.50	4.28	3.50	8.31	2.16	15/64	0.03	3.47
2-15/16	**517**	7.75	4.28	3.75	8.31	2.16	15/64	0.03	3.47
3-7/16	**520**	9.25	5.00	4.50	10.13	2.48	3/8	0.03	4.05

FEATURES/BENEFITS PAGE B14-2 | SPECIFICATIONS PAGE B14-5 | HOW TO ORDER/NOMENCLATUE PAGE B14-8 | SELECTION PAGE B14-14

DIMENSIONS

IMPERIAL ISAF
2-7/16 THRU 7 INCH - 4-BOLT

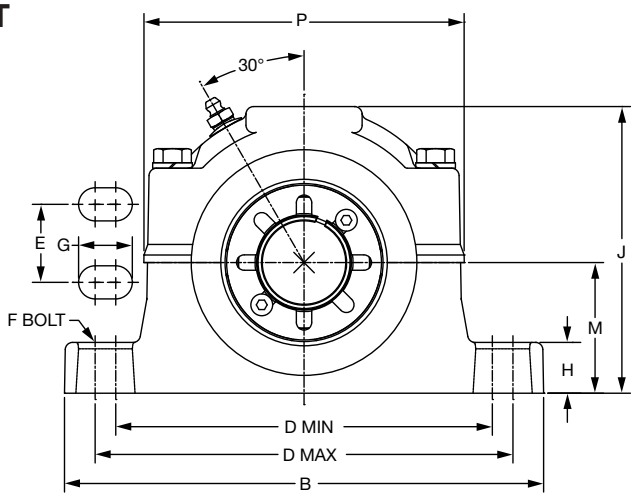

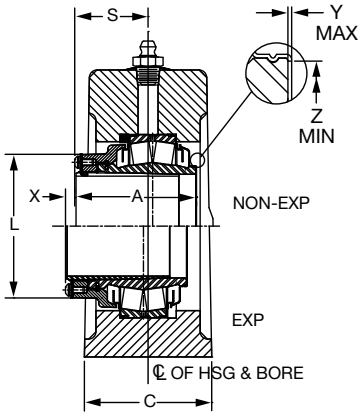

LABYRINTH SEAL

Bearing	Shaft Size Inch	TRIDENT Seal				Labyrinth Seal			
		Non-Expansion		Expansion		Non-Expansion		Expansion	
		Part No.	Part Name	Part No.	Part Name	Part No.	Part Name	Part No.	Part Name
22213	2-7/16	**070058**	P4B515-ISAF-207R	**070068**	P4B515-ISAF-207RE	**070078**	P4B515-ISAF-207L	**070088**	P4B515-ISAF-207LE
22215	2-11/16	**070094**	P4B516-ISAF-211R	**070095**	P4B516-ISAF-211RE	**070096**	P4B516-ISAF-211L	**070097**	P4B516-ISAF-211LE
22215	2-15/16	**070059**	P4B517-ISAF-215R	**070069**	P4B517-ISAF-215RE	**070079**	P4B517-ISAF-215L	**070089**	P4B517-ISAF-215LE
22218	3-7/16	**070060**	P4B520-ISAF-307R	**070070**	P4B520-ISAF-307RE	**070080**	P4B520-ISAF-307L	**070090**	P4B520-ISAF-307LE
22220	3-15/16	**070061**	P4B522-ISAF-315R	**070071**	P4B522-ISAF-315RE	**070081**	P4B522-ISAF-315L	**070091**	P4B522-ISAF-315LE
22222	4-7/16	**070062**	P4B526-ISAF-407R	**070072**	P4B526-ISAF-407RE	**070082**	P4B526-ISAF-407L	**070092**	P4B526-ISAF-407LE
22226	4-15/16	**070063**	P4B528-ISAF-415R	**070073**	P4B528-ISAF-415RE	**070083**	P4B528-ISAF-415L	**070093**	P4B528-ISAF-415LE
22228	5-7/16	**037850**	P4B532-ISAF-507R	**037854**	P4B532-ISAF-507RE	**037901**	P4B532-ISAF-507L	**037902**	P4B532-ISAF-507LE
	5-1/2	**037903**	P4B532-ISAF-508R	**037904**	P4B532-ISAF-508RE	**037905**	P4B532-ISAF-508L	**037906**	P4B532-ISAF-508LE
22232	5-15/16	**037851**	P4B534-ISAF-515R	**037855**	P4B534-ISAF-515RE	**037907**	P4B534-ISAF-515L	**037908**	P4B534-ISAF-515LE
	6	**037909**	P4B534-ISAF-600R	**037910**	P4B534-ISAF-600RE	**037911**	P4B534-ISAF-600L	**037912**	P4B534-ISAF-600LE
22236	6-7/16	**037852**	P4B536-ISAF-607R	**037856**	P4B536-ISAF-607RE	**037913**	P4B536-ISAF-607L	**037914**	P4B536-ISAF-607LE
	6-1/2	**037915**	P4B536-ISAF-608R	**037916**	P4B536-ISAF-608RE	**037917**	P4B536-ISAF-608L	**037918**	P4B536-ISAF-608LE
22236	6-15/16	**037853**	P4B538-ISAF-615R	**037857**	P4B538-ISAF-615RE	**037919**	P4B538-ISAF-615L	**037920**	P4B538-ISAF-615LE
	7	**037921**	P4B538-ISAF-700R	**037922**	P4B538-ISAF-700RE	**037923**	P4B538-ISAF-700L	**037924**	P4B538-ISAF-700LE

NOTE: See page B14-52 for 1-1/8 thru 2-3/16 inch

DIMENSIONS



IMPERIAL ISAF
2-7/16 THRU 7 INCH - 4-BOLT

Shaft Size	SAF Series	A	B	C	D		E	F Bolts	G	H
					Min	Max				
2-7/16	**515**	3.42	11.13	3.13	8.63	9.63	1.88	1/2	1.13	1.25
2-11/16	**516**	3.50	12.59	3.50	9.88	11.00	2.13	5/8	1.31	1.00
2-15/16	**517**	3.50	12.59	3.50	9.88	11.00	2.13	5/8	1.31	1.25
3-7/16	**520**	4.16	15.36	4.34	11.81	13.13	2.38	3/4	1.63	1.60
3-15/16	**522**	4.70	16.50	4.75	12.59	14.50	2.75	3/4	1.83	1.73
4-7/16	**526**	5.23	18.38	5.13	14.50	16.00	3.25	7/8	1.75	2.06
4-15/16	**528**	5.98	19.70	5.88	15.63	17.38	3.38	1	2.00	2.06
5-7/16 5-1/2	**532**	6.17	21.66	6.25	17.38	19.25	3.75	1	2.06	2.34
5-15/16 6	**534**	7.08	24.75	6.75	19.38	21.63	4.25	1	2.25	2.88
6-7/16 6-1/2	**536**	7.39	26.75	7.13	20.88	23.63	4.63	1	2.50	3.00
6-15/16 7	**538**	7.39	28.00	7.50	21.63	24.38	4.50	1-1/4	2.75	3.13

Shaft Size	SAF Series	J	L	M	P	S	X Expansion	Y	Z
2-7/16	**515**	6.86	3.88	3.25	7.42	2.06	5/16	0.03	2.94
2-11/16	**516**	7.50	4.28	3.50	8.31	2.16	15/64	0.03	3.47
2-15/16	**517**	7.75	4.28	3.75	8.31	2.16	15/64	0.03	3.47
3-7/16	**520**	9.25	5.00	4.50	10.13	2.48	3/8	0.03	4.05
3-15/16	**522**	10.18	5.56	4.94	10.72	2.86	3/8	0.03	4.50
4-7/16	**526**	11.66	6.44	6.00	12.47	3.09	3/8	0.04	5.00
4-15/16	**528**	12.41	7.63	6.00	13.38	3.69	3/8	0.04	5.84
5-7/16 5-1/2	**532**	12.50	8.75	6.69	13.38	3.64	3/8	0.04	5.92
5-15/16 6	**534**	13.69	10.25	7.06	15.09	4.11	3/8	0.04	7.02
6-7/16 6-1/2	**536**	15.13	11.41	7.50	17.38	4.34	3/8	0.04	7.89
6-15/16 7	**538**	15.50	11.41	7.88	1.38	4.34	3/8	0.04	7.89

FEATURES/BENEFITS PAGE B14-2	SPECIFICATIONS PAGE B14-5	HOW TO ORDER/NOMENCLATUE PAGE B14-8	SELECTION PAGE B14-14

DIMENSIONS

IMPERIAL ISAF

35 THRU 90MM - 2-BOLT

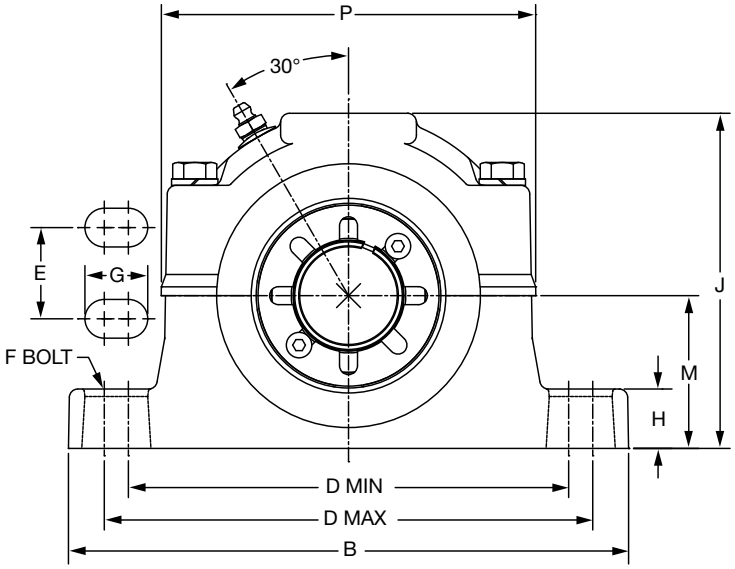

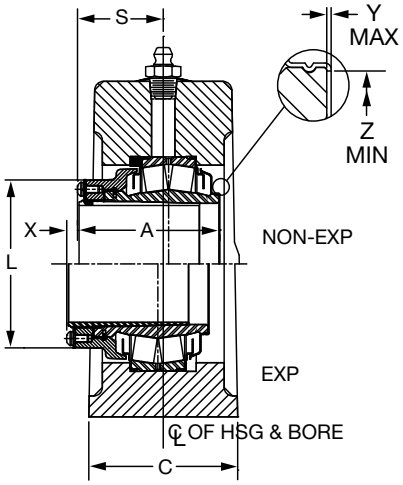

LABYRINTH SEAL

Bearing	Shaft Size in mm	Trident Seal				Labyrinth Seal			
		Non-Expansion		Expansion		Non-Expansion		Expansion	
		Part No.	Part Name	Part No.	Part Name	Part No.	Part Name	Part No.	Part Name
22208	35	**068774**	P2B509-ISAF-035MR	**068775**	P2B509-ISAF-035MRE		P2B509-ISAF-035ML		P2B509-ISAF-035MLE
22209	40	**077646**	P2B509-ISAF-040MR		P2B509-ISAF-040MRE		P2B509-ISAF-040ML		P2B509-ISAF-040MLE
22210	45	**077647**	P2B510-ISAF-045MR		P2B510-ISAF-045MRE		P2B510-ISAF-045ML		P2B510-ISAF-045MLE
22210	50	**073562**	P2B511-ISAF-050MR	**073561**	P2B511-ISAF-050MRE		P2B511-ISAF-050ML		P2B511-ISAF-050MLE
22213	60	**077648**	P2B513-ISAF-060MR		P2B513-ISAF-060MRE	**067921**	P2B515-ISAF-060ML	**067922**	P2B515-ISAF-060MLE
22213	60	**068576**	P2B515-ISAF-060MR		P2B515-ISAF-060MRE		P2B515-ISAF-060ML		P2B515-ISAF-060MLE
22215	65	**077649**	P2B515-ISAF-065MR		P2B515-ISAF-065MRE		P2B515-ISAF-065ML		P2B515-ISAF-065MLE
22215	70	**077650**	P2B516-ISAF-070MR		P2B516-ISAF-070MR		P2B516-ISAF-070ML		P2B516-ISAF-070MLE
22215	65	**065641**	P2B517-ISAF-065MR		P2B517-ISAF-065MRE		P2B517-ISAF-065ML		P2B517-ISAF-065MLE
22215	75	**065657**	P2B517-ISAF-075MR	**068905**	P2B517-ISAF-075MRE		P2B517-ISAF-075ML		P2B517-ISAF-075MLE
22220	90	**077651**	P2B520-ISAF-090MR		P2B520-ISAF-090MRE		P2B520-ISAF-090ML		P2B520-ISAF-090MLE

DIMENSIONS



IMPERIAL ISAF

35 THRU 90MM - 2-BOLT

Shaft Size	SAF Series	A	B	C	D		F Bolts	G	H	J	L	M	P	S	X Expansion	Y	Z
					Min	Max											
35 40	509	66.80	209.55	55.63	158.75	177.80	M12	23.88	22.35	125.48	74.17	57.15	140.21	5.56	5.56	0.51	45.72
45	510	71.12	209.55	60.45	165.10	177.80	M12	22.35	26.16	138.43	76.20	63.50	147.57	43.94	5.56	0.51	52.83
50	511	72.64	244.60	69.85	187.45	209.55	M16	30.48	26.16	151.64	83.31	69.85	162.05	43.94	6.75	0.51	58.42
60	513	76.96	279.40	82.55	218.44	241.30	M16	29.46	26.16	161.04	88.90	76.20	177.04	47.75	5.56	0.76	65.79
60 65	515	86.87	282.70	79.50	219.20	244.60	M16	28.70	31.75	174.24	98.04	82.55	188.47	52.32	7.94	0.76	74.68
70	516	88.90	319.79	88.90	250.95	279.40	M20	33.27	25.40	190.50	108.71	88.90	211.07	54.86	5.95	0.76	88.14
65 75	517	88.90	319.79	88.90	250.95	279.40	M20	33.27	31.75	196.85	108.71	95.25	211.07	54.86	5.95	0.76	88.14
90	520	105.66	390.14	110.24	299.97	333.50	M22	41.40	42.16	234.95	127.00	114.30	257.30	62.99	9.53	0.76	102.87

DIMENSIONS

IMPERIAL ISAF

65 THRU 170MM - 4-BOLT

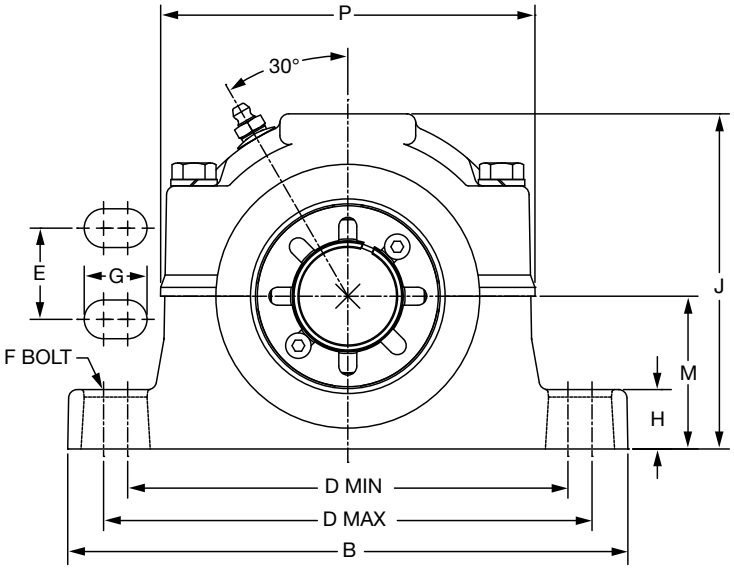

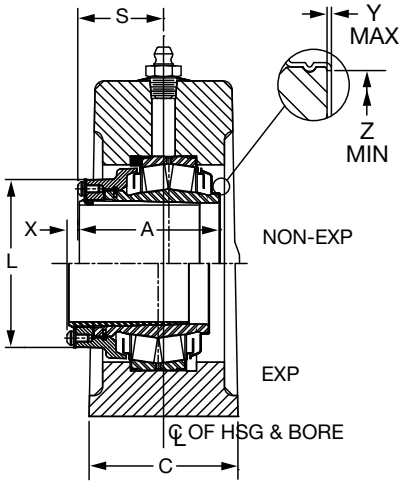

LABYRINTH SEAL

Bearing	Shaft Size in mm	Trident Seal				Labyrinth Seal			
		Non-Expansion		Expansion		Non-Expansion		Expansion	
		Part No.	Part Name	Part No.	Part Name	Part No.	Part Name	Part No.	Part Name
22215	65	**077660**	P4B515-ISAF-065MR		P4B515-ISAF-065MRE		P4B515-ISAF-065ML		P4B515-ISAF-065MLE
22215	70	**077661**	P4B516-ISAF-070MR		P4B516-ISAF-070MRE		P4B516-ISAF-070ML		P4B516-ISAF-070MLE
22215	75	**062700**	P4B517-ISAF-075MR		P4B517-ISAF-075MRE		P4B517-ISAF-075ML		P4B517-ISAF-075MLE
22218	85	**077458**	P4B520-ISAF-085MR		P4B520-ISAF-085MRE		P4B520-ISAF-085ML		P4B520-ISAF-085MLE
22220	90	**077662**	P4B520-ISAF-090MR		P4B520-ISAF-090MRE		P4B520-ISAF-090ML		P4B520-ISAF-090MLE
22220	90	**073070**	P4B522-ISAF-090MR	**073071**	P4B522-ISAF-090MRE		P4B522-ISAF-090ML		P4B522-ISAF-090MLE
22220	100	**074867**	P4B522-ISAF-100MR	**074868**	P4B522-ISAF-100MRE		P4B522-ISAF-100ML		P4B522-ISAF-100MLE
22222	110	**075444**	P4B526-ISAF-110MR	**077561**	P4B526-ISAF-110MRE		P4B526-ISAF-110ML		P4B526-ISAF-110MLE
22226	115	**077652**	P4B526-ISAF-115MR		P4B526-ISAF-115MRE		P4B526-ISAF-115ML		P4B526-ISAF-115MLE
22226	125	**075431**	P4B528-ISAF-125MR		P4B528-ISAF-125MRE	**077473**	P4B528-ISAF-125ML		P4B528-ISAF-125MLE
22228	130	**075306**	P4B532-ISAF-130MR		P4B532-ISAF-130MRE		P4B532-ISAF-130ML		P4B532-ISAF-130MLE
22228	140	**073938**	P4B532-ISAF-140MR		P4B532-ISAF-140MRE		P4B532-ISAF-140ML		P4B532-ISAF-140MLE
22232	150	**075432**	P4B534-ISAF-150MR	**077897**	P4B534-ISAF-150MRE		P4B534-ISAF-150ML		P4B534-ISAF-150MLE
22236	160	**074613**	P4B536-ISAF-160MR	**074614**	P4B536-ISAF-160MRE		P4B536-ISAF-160ML		P4B536-ISAF-160MLE
22236	170	**062461**	P4B536-ISAF-170MR		P4B536-ISAF-170MRE		P4B536-ISAF-170ML		P4B536-ISAF-170MLE
22236	170	**062270**	P4B538-ISAF-170MR		P4B538-ISAF-170MRE		P4B538-ISAF-170ML		P4B538-ISAF-170MLE



DIMENSIONS

IMPERIAL ISAF

65 THRU 170MM - 4-BOLT

Shaft Size	SAF Series	A	B	C	D		E	F	G	H	J	L	M	P	S	X Expansion	Y	Z
					Min	Max												
65	515	86.87	282.70	79.50	219.20	244.60	47.75	M12	28.70	31.75	174.24	98.55	82.55	188.47	52.32	7.94	0.76	74.68
70	516	88.90	319.79	88.90	250.95	279.40	54.10	M16	33.27	25.40	190.50	108.71	88.90	211.07	54.86	5.95	0.76	88.14
75	517	88.90	319.79	88.90	250.95	279.40	54.10	M16	33.27	31.75	196.85	108.71	95.25	211.07	54.86	5.95	0.76	88.14
85 90	520	105.66	390.14	110.24	299.97	333.50	60.45	M20	41.40	40.64	234.95	127.00	114.30	257.30	62.99	9.53	0.76	102.87
90 100	522	119.38	419.10	120.65	319.79	368.30	69.85	M20	46.48	43.94	258.57	141.22	125.48	272.29	72.64	9.53	0.76	114.30
110	526	132.84	466.85	130.30	368.30	406.40	82.55	M22	44.45	52.32	296.16	163.58	152.40	316.74	78.49	9.53	1.02	127.00
115		151.89										193.80			93.73			148.34
125	528	151.89	500.38	149.35	397.00	441.45	85.85	M24	50.80	52.32	315.21	193.80	152.40	339.85	93.73	9.53	1.02	148.34
130 140	532	156.72	550.16	158.75	441.45	488.95	95.25	M24	52.32	59.44	317.50	222.25	169.93	339.85	92.46	9.53	1.02	150.37
150	534	179.83	628.65	171.45	492.25	549.40	107.95	M24	57.15	73.15	347.73	260.35	179.32	383.29	104.39	9.53	1.02	178.31
160 170	536	187.71	679.45	188.72	530.35	600.20	102.36	M24	63.50	76.20	384.30	289.81	190.50	441.45	110.24	9.53	1.02	200.41
170	538	187.71	711.20	190.50	549.40	619.25	114.30	M30	69.85	79.50	393.70	289.81	200.15	441.45	110.24	9.53	1.02	200.41

FEATURES/BENEFITS PAGE B14-2	SPECIFICATIONS PAGE B14-5	HOW TO ORDER/NOMENCLATUE PAGE B14-8	SELECTION PAGE B14-14

DIMENSIONS

ISAF PILLOW BLOCK HYDRAULIC

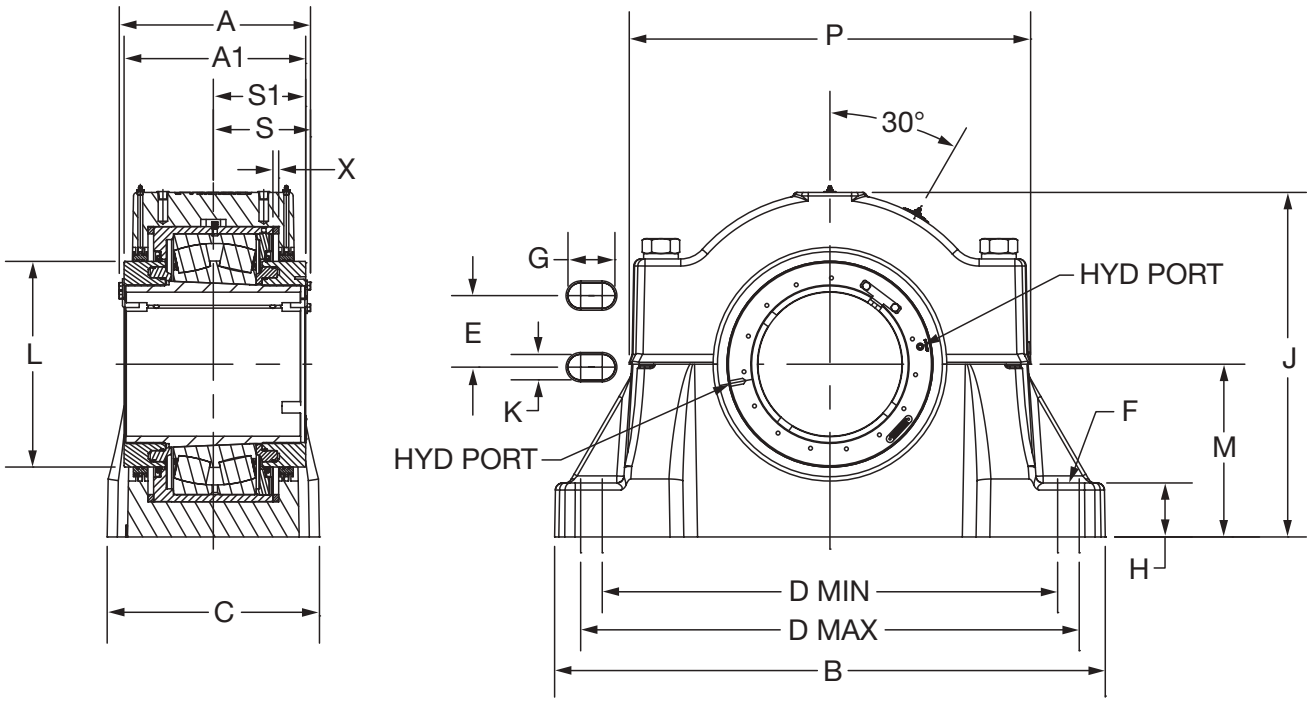

Part Numbers - Hydraulic ISAF

Housing Designation	Bearing Series	Shaft Size	Part Number	Description	Insert Number
532	22232K	5-7/16"	**072955**	P4B532-ISAF-507R HYD	**072954**
532	22232K	5-1/2"	**072564**	P4B532-ISAF-508R HYD	**072572**
534	22234K	5-15/16"	**072959**	P4B534-ISAF-515R HYD	**072958**
534	22234K	6"	**072565**	P4B534-ISAF-600R HYD	**072573**
536	22236K	6-7/16"	**072963**	P4B536-ISAF-607R HYD	**072962**
536	22236K	6-1/2"	**072566**	P4B536-ISAF-608R HYD	**072574**
538	22238K	6-15/16"	**072967**	P4B538-ISAF-615R HYD	**072966**
538	22238K	7"	**072567**	P4B538-ISAF-700R HYD	**072575**
544	22244K	7-15/16"	**072490**	P4B544-ISAF-715R HYD	**072492**
544	22244K	8"	**072000**	P4B544-ISAF-800R HYD	**072014**
048	23048K	8-1/2"	**072820**	P4B048-ISAF-808R HYD	**072822**
048	23048K	9"	**072001**	P4B048-ISAF-900R HYD	**072015**
3152	23152K	9-7/16"	**072786**	P4B3152-ISAF-907R HYD	**072791**
3152	23152K	9-1/2"	**072789**	P4B3152-ISAF-908R HYD	**072792**
056	23056K	10"	**072002**	P4B056-ISAF-1000R HYD	**072016**
056	23056K	10-7/16"	**072772**	P4B056-ISAF-1007R HYD	**072771**
056	23056K	10-1/2"	**074115**	P4B056-ISAF-1008R HYD	**074117**

Housing Designation	Bearing Series	Shaft Size	Part Number	Description	Insert Number
3156	23156K	10-7/16"	**072742**	P4B3156-ISAF-1007R HYD	**072746**
3156	23156K	10-1/2"	**072744**	P4B3156-ISAF-1008R HYD	**072747**
060	23060K	11"	**072003**	P4B056-ISAF-1100R HYD	**072017**
3160	23160K	10-15/16"	**072831**	P4B3160-ISAF-1015R HYD	**072835**
3160	23160K	11"	**072833**	P4B3160-ISAF-1100R HYD	**072836**
3164	23164K	11-15/16"	**072857**	P4B3164-ISAF-1115R HYD	
3164	23164K	12"	**072859**	P4B3164-ISAF-1200R HYD	
068	23068K	12-1/2"	**072004**	P4B068-ISAF-1208R HYD	**072018**
3168	23168K	12-7/16"	**072910**	P4B3168-ISAF-1207R HYD	
3168	23168K	12-1/2"	**072911**	P4B3168-ISAF-1208R HYD	
3172	23172K	13-7/16"	**072706**	P4B3172-ISAF-1307R HYD	**072710**
3172	23172K	13-1/2"	**072708**	P4B3172-ISAF-1308R HYD	**072711**
076	23076K	14"	**072005**	P4B076-ISAF-1400R HYD	**072019**
3176	23176K	13-15/16"	**072688**	P4B3176-ISAF-1400R HYD	**072692**
3176	23176K	14"	**072690**	P4B3176-ISAF-1315R HYD	**072693**
080	23080K	15"	**072006**	P4B080-ISAF-1500R HYD	**072020**

FEATURES/BENEFITS PAGE B14-2 | SPECIFICATIONS PAGE B14-5 | HOW TO ORDER/NOMENCLATUE PAGE B14-8 | SELECTION PAGE B14-14



ISAF PILLOW BLOCK HYDRAULIC

Shaft Size	SAF Series	Bearing Series	A	A1	B	C	D		E	F Bolts	G	H	J	K	L	M	P	S	S1	X Exp
							Min	Max												
5-7/16" 5-1/2"	532	22232K	9.59	9.05	21.66	6.25	17.38	19.25	3.75	1	2.06	2.34	13.82	1.12	9.68	6.69	16.38	4.68	4.41	0.38
5-15/16" 6"	534	22234K	9.81	9.26	24.75	6.75	19.38	21.63	4.25	1	2.25	2.87	14.56	1.12	10.19	7.06	17.38	4.81	4.54	0.38
6-7/16" 6-1/2"	536	22236K	10.15	9.60	26.75	7.13	20.88	23.63	4.63	1	2.50	3.00	15.25	1.12	10.45	7.50	18.38	4.82	4.55	0.38
6-15/16" 7"	538	22238K	10.20	9.66	28.00	7.50	21.63	24.38	4.50	1-1/4	2.75	3.13	16.37	1.38	10.96	7.88	19.38	4.94	4.67	0.38
7-15/16" 8"	544	22244K	10.58	9.91	32.75	8.88	24.75	27.88	5.25	1-1/2	3.18	3.75	19.38	1.62	12.23	9.50	22.75	5.12	4.79	0.38
8-1/2" 9"	048	23048K	10.28	9.62	28.75	8.00	22.50	25.00	5.00	1-1/4	2.63	3.38	17.34	1.38	12.24	8.25	20.88	5.14	4.80	0.38
9-7/16" 9-1/2"	3152	23152K	13.17	12.51	35.00	13.12	29.00	30.50	8.75	1-5/8	2.50	3.75	21.55	1.76	13.26	10.25	24.32	6.59	6.26	0.78
10" 10-7/16" 10-1/2"	056	23056K	10.99	10.33	34.25	9.00	26.25	29.50	5.50	1-1/2	3.25	4.00	20.12	1.62	14.28	9.88	23.88	5.58	5.24	0.38
10-7/16" 10-1/2"	3156	23156K	13.28	12.61	38.25	14.75	31.63	34.63	9.00	1-5/8	3.25	3.75	23.93	1.76	14.28	12.00	27.87	6.75	6.41	0.78
11"	060	23060K	11.49	10.82	38.25	14.75	31.63	34.63	9.00	1-5/8	3.25	3.75	23.93	1.76	15.30	12.00	27.87	5.71	5.38	0.38
10-15/16" 11"	3160	23160K	13.80	13.13	38.25	14.75	31.63	34.63	9.00	1-5/8	3.25	3.37	24.50	1.76	15.30	12.00	26.88	7.03	6.70	0.78
11-15/16" 12"	3164	23164K	14.46	13.79	41.75	15.75	35.00	36.50	10.50	1-7/8	2.75	4.50	26.58	2.00	16.33	12.81	29.50	7.22	6.89	0.78
12-1/2"	068	23068K	12.08	11.23	39.00	15.25	32.00	34.00	10.00	1-7/8	3.00	4.56	24.50	2.00	17.32	12.00	28.81	6.01	5.59	0.38
12-7/16" 12-1/2"	3168	23168K	15.23	14.39	43.58	17.75	36.75	38.25	10.75	2	2.87	5.00	28.06	2.12	17.31	14.00	31.50	7.58	7.16	0.78
13-7/16" 13-1/2"	3172	23172K	15.16	14.49	46.00	17.13	39.25	40.75	11.00	2	2.87	5.25	29.25	2.12	18.35	14.50	33.56	7.71	7.38	0.78
14"	076	23076K	13.01	12.09	41.75	15.75	35.00	36.50	10.50	2	2.87	4.50	26.58	2.12	18.48	12.81	29.50	6.40	5.94	0.38
13-15/16" 14"	3176	23176K	15.83	14.91	46.00	17.13	39.25	40.75	11.00	2	2.87	5.25	29.50	2.12	18.48	14.50	33.56	8.04	7.58	0.78
15"	080	23080K	13.54	12.62	46.00	17.13	39.25	40.75	11.00	2	2.87	5.75	29.00	2.12	19.49	14.50	33.56	6.68	6.22	0.38

FEATURES/BENEFITS PAGE B14-2	SPECIFICATIONS PAGE B14-5	HOW TO ORDER/NOMENCLATUE PAGE B14-8	SELECTION PAGE B14-14

DIMENSIONS

IMPERIAL - ISN Metric Pillow Block
30 THROUGH 140mm, 2-BOLT

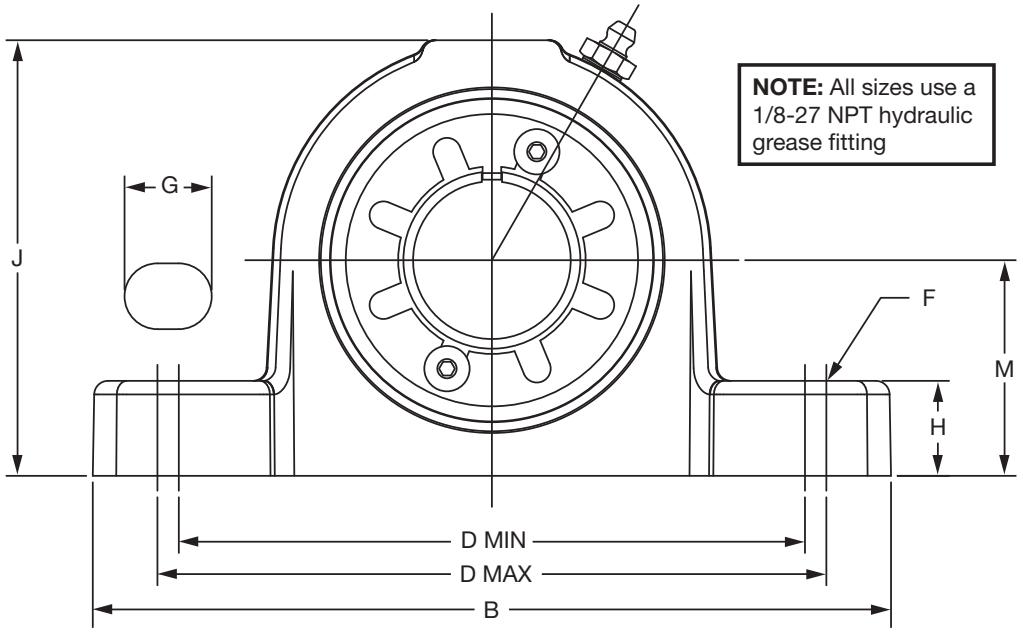

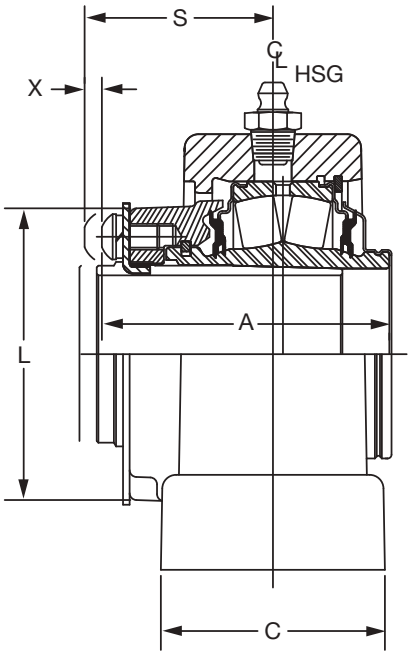

EXPANSION

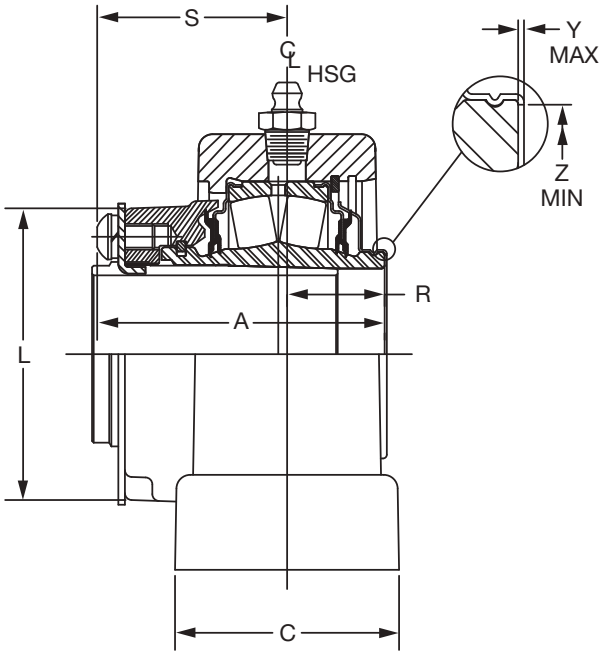

NON-EXPANSION

DODGE



IMPERIAL - ISN Metric Pillow Block
30 THROUGH 140mm, 2-BOLT

Bearing	Shaft Size mm	TRIDENT SEAL				LABYRINTH SEAL			
		NON-EXPANSION		EXPANSION		NON-EXPANSION		EXPANSION	
		Part Number	Description	Part Number	Description	Part Number	Description	Part Number	Description
22208	30mm	**071000**	P2B507-ISN-030MFR	**071017**	P2B507-ISN-030MLR	**071034**	P2B507-ISN-030MFS	**071051**	P2B507-ISN-030MLS
	35mm	**071001**	P2B508-ISN-035MFR	**071018**	P2B508-ISN-035MLR	**071035**	P2B508-ISN-035MFS	**071052**	P2B508-ISN-035MLS
22209	40mm	**071002**	P2B509-ISN-040MFR	**071019**	P2B509-ISN-040MLR	**071036**	P2B509-ISN-040MFS	**071053**	P2B509-ISN-040MLS
22210	45mm	**071003**	P2B510-ISN-045MFR	**071020**	P2B510-ISN-045MLR	**071037**	P2B510-ISN-045MFS	**071054**	P2B510-ISN-045MLS
	50mm	**071004**	P2B511-ISN-050MFR	**071021**	P2B511-ISN-050MLR	**071038**	P2B511-ISN-050MFS	**071055**	P2B511-ISN-050MLS
22211	55mm	**071005**	P2B512-ISN-055MFR	**071022**	P2B512-ISN-055MLR	**071039**	P2B512-ISN-055MFS	**071056**	P2B512-ISN-055MLS
22213	60mm	**071006**	P2B513-ISN-060MFR	**071023**	P2B513-ISN-060MLR	**071040**	P2B513-ISN-060MFS	**071057**	P2B513-ISN-060MLS
22215	65mm	**071007**	P2B515-ISN-065MFR	**071024**	P2B515-ISN-065MLR	**071041**	P2B515-ISN-065MFS	**071058**	P2B515-ISN-065MLS
22215	70mm	**071008**	P2B516-ISN-070MFR	**071025**	P2B516-ISN-070MLR	**071042**	P2B516-ISN-070MFS	**071059**	P2B516-ISN-070MLS
22215	75mm	**071009**	P2B517-ISN-075MFR	**071026**	P2B517-ISN-075MLR	**071043**	P2B517-ISN-075MFS	**071060**	P2B517-ISN-075MLS
22218	80mm	**071010**	P2B518-ISN-080MFR	**071027**	P2B518-ISN-080MLR	**071044**	P2B518-ISN-080MFS	**071061**	P2B518-ISN-080MLS
22218	85 mm	**071011**	P2B519-ISN-085MFR	**071028**	P2B519-ISN-085MLR	**071045**	P2B519-ISN-085MFS	**071062**	P2B519-ISN-085MLS
22220	90mm	**071012**	P2B520-ISN-090MFR	**071029**	P2B520-ISN-090MLR	**071046**	P2B520-ISN-090MFS	**071063**	P2B520-ISN-090MLS
	100mm	**071013**	P2B522-ISN-100MFR	**071030**	P2B522-ISN-100MLR	**071047**	P2B522-ISN-100MFS	**071064**	P2B522-ISN-100MLS
22222	110mm	**071014**	P2B524-ISN-110MFR	**071031**	P2B524-ISN-110MLR	**071048**	P2B524-ISN-110MFS	**071065**	P2B524-ISN-110MLS
22226	115mm	**071015**	P2B526-ISN-115MFR	**071032**	P2B526-ISN-115MLR	**071049**	P2B526-ISN-115MFS	**071066**	P2B526-ISN-115MLS
	125mm	**071016**	P2B528-ISN-125MFR	**071033**	P2B528-ISN-125MLR	**071050**	P2B528-ISN-125MFS	**071067**	P2B528-ISN-125MLS
22228	135mm	**071102**	P2B530-ISN-135MFR	**071103**	P2B530-ISN-135MLR	**071104**	P2B530-ISN-135MFS	**071105**	P2B530-ISN-135MLS
22232	140mm	**071106**	P2B532-ISN-140MFR	**071107**	P2B532-ISN-140MLR	**071108**	P2B532-ISN-140MFS	**071109**	P2B532-ISN-140MFS

Shaft Size mm	A	B	C	D		F Bolt Dia.	G	H	J	L	M	R	S	T	Y	Z
				min.	max.											
30	66.7	184.9	52.0	145.0	155.0	M12	20.0	22.0	100.9	67.6	50.0	22.6	44.1	4.0	0.51	45.7
35	66.7	205.9	60.2	150.0	174.6	M12	27.3	25.0	110.8	67.6	60.0	22.6	44.1	4.0		
40	71.4	206.3	60.2	155.0	174.6	M12	24.8	25.0	114.0	74.7	60.0	20.6	50.8	6.5	0.51	52.8
45	72.6	204.9	60.2	160.0	175.0	M12	22.5	25.0	113.8	81.0	60.0	21.1	51.4	6.5	0.51	58.4
50	72.6	253.9	70.2	190.0	215.9	M16	31.0	28.0	124.5	81.0	70.0	21.1	51.4	6.5		
55	77.0	253.9	69.9	190.0	216.0	M16	31.0	30.0	130.3	87.1	70.0	23.1	54.2	7.0	0.76	66.0
60	86.9	274.9	80.2	205.0	235.0	M16	33.0	30.0	152.4	96.5	80.0	27.1	59.7	7.0	0.76	74.9
65	88.9	280.1	80.1	215.0	236.0	M16	28.5	30.0	156.0	106.7	80.0	26.9	61.7	7.0	0.76	88.1
70	88.9	315.9	90.2	244.5	268.3	M20	34.1	32.0	176.0	106.7	95.0	26.9	61.7	7.0	0.76	88.1
75	88.9	315.9	90.2	244.5	268.3	M20	34.1	32.0	176.0	106.7	95.0	26.9	61.7	7.0		
80	106.0	345.3	100.3	270.0	293.7	M20	34.0	35.0	196.7	124.7	100.0	34.5	71.4	7.0	0.76	102.9
85	106.0	345.0	100.2	264.2	296.1	M20	37.9	35.0	205.2	124.7	112.0	34.5	71.4	7.0		
90	120.0	379.8	110.2	292.8	327.0	M24	43.1	40.0	218.3	138.7	112.0	37.2	82.3	8.0	0.76	114.3
100	120.0	410.0	120.0	314.4	356.0	M24	46.8	45.0	239.0	138.7	125.0	37.2	82.3	8.0		
110	133.0	410.0	120.0	314.5	356.0	M24	46.8	45.0	260.7	161.3	140.0	44.4	88.4	10.0	1.02	127.0
115	152.0	444.8	130.0	359.6	387.0	M24	41.7	50.0	292.8	191.8	150.0	48.6	103.2	10.0	1.02	148.3
125	152.0	500.0	150.2	400.0	427.0	M30	48.5	50.0	290.4	191.8	150.0	48.6	103.2	10.0		
135	156.8	539.8	159.8	443.0	457.0	M30	42.0	60.0	312.5	222.2	160.0	51.8	105.0	16.3	1.02	150.4
140	179.8	560.0	160.0	463.0	477.0	M30	42.0	60.0	345.3	260.4	170.0	62.4	117.4	16.8	1.02	178.3

Dimensions in mm

M = Size in millimeters otherwise 110 = 1 and 10/16"
F = Non-Expansion
L = Expansion (Non-Locating)
R = Trident Rubbing Seal
S = Labyrinth Seal

FEATURES/BENEFITS PAGE B14-2	SPECIFICATIONS PAGE B14-5	HOW TO ORDER/NOMENCLATUE PAGE B14-8	SELECTION PAGE B14-14

DIMENSIONS

ISNX Hydraulic

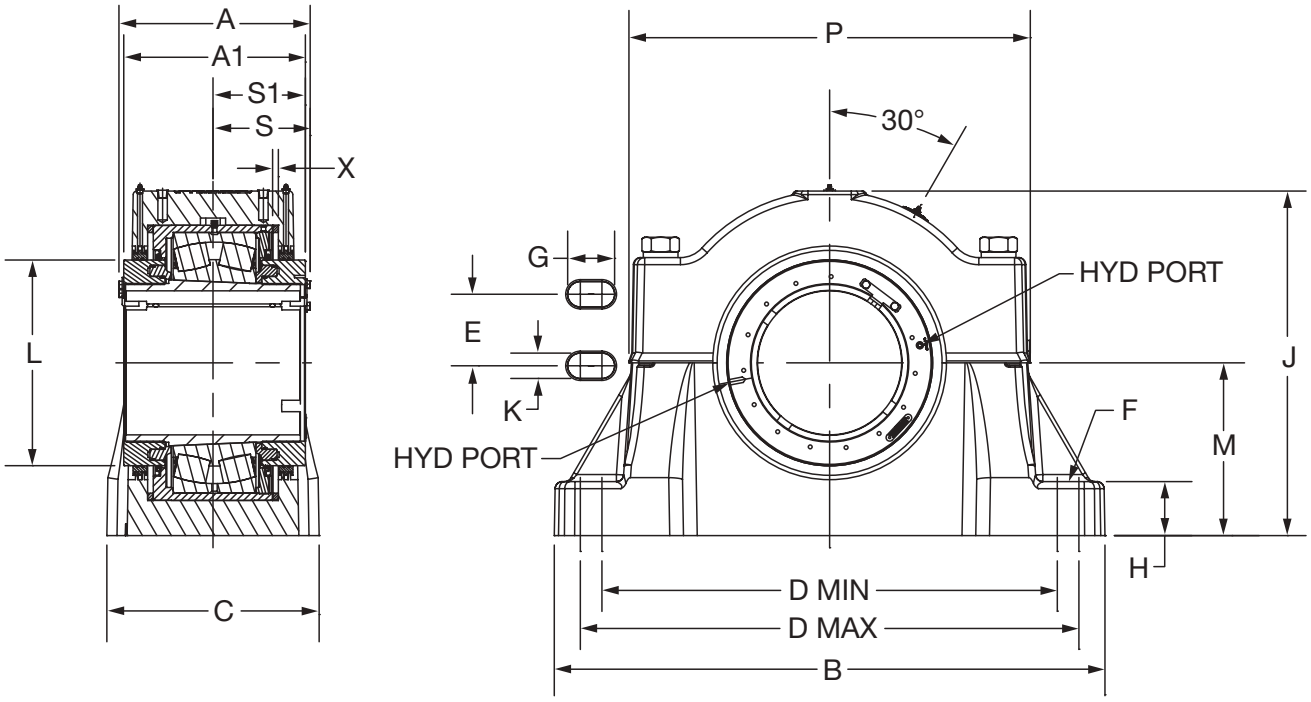

DIMENSIONS



ISNX Hydraulic

Housing Designation	Bearing Series	Shaft Size	Part Number	Description	Insert Number
3134	23134K	150mm	**072919**	P4B134-ISNX-150MR HYD	**072895**
3136	23136K	160mm	**072920**	P4B136-ISNX-160MR HYD	**072896**
3138	23138K	170mm	**072921**	P4B138-ISNX-170MR HYD	**072897**
3140	23140K	180mm	**072922**	P4B140-ISNX-180MR HYD	**072898**
3144	23144K	200mm	**072923**	P4B144-ISNX-200MR HYD	**072899**
3148	23148K	220mm	**072924**	P4B148-ISNX-220MR HYD	**072900**
3152	23152K	240mm	**072912**	P4B152-ISNX-240MR HYD	**072901**
3156	23156K	260mm	**072913**	P4B156-ISNX-260MR HYD	**072902**
3160	23160K	280mm	**072914**	P4B160-ISNX-280MR HYD	**072903**
3164	23164K	300mm	**072915**	P4B164-ISNX-300MR HYD	**072904**
3168	23168K	320mm	**072916**	P4B168-ISNX-320MR HYD	**072905**
3172	23172K	340mm	**072917**	P4B172-ISNX-340MR HYD	**072906**
3176	23176K	360mm	**072918**	P4B176-ISNX-360MR HYD	**072907**

Shaft Size mm	Series	A	A1	A2	B	C	D		E	F	G	H	J	K	L	L2	M	P	S	S1	X Exp	Z
							min.	max.		Bolt Dia. mm												
150	3134	254.5	240.5	155.2	510.0	180.1	423.9	436.1	100.1	24	34.0	70.1	360.4	27.9	252.5	268.7	169.9	416.1	124.0	116.8	19.8	0.0
160	3136	266.4	252.5	161.0	530.1	190.0	444.0	456.2	110.0	24	34.0	74.9	380.0	27.9	265.4	283.0	179.8	437.9	131.6	124.5	19.8	0.0
170	3138	268.5	254.5	168.1	560.1	210.1	474.0	486.2	119.9	24	34.0	80.0	399.5	27.9	278.4	295.9	190.0	458.2	133.9	127.0	19.8	0.0
180	3140	284.5	270.5	170.2	610.1	230.1	502.9	517.1	130.0	30	41.9	85.1	426.0	35.1	285.0	302.5	210.1	470.4	137.9	130.8	19.8	0.0
200	3144	294.9	277.9	175.8	640.1	239.8	532.9	547.1	140.2	30	41.9	89.9	450.9	35.1	310.6	328.4	220.0	500.4	143.8	135.1	19.8	0.0
220	3148	316.5	299.5	188.7	700.0	260.1	592.8	607.1	149.9	30	41.9	95.0	486.2	35.1	310.9	328.7	240.0	530.4	154.9	146.6	19.8	0.0
240	3152	334.5	317.8	197.1	770.1	279.9	642.1	658.1	160.0	36	50.0	100.1	546.9	41.9	336.8	354.3	259.8	617.7	167.4	159.0	19.8	0.0
260	3156	337.3	320.3	201.7	789.9	279.9	661.9	677.9	160.0	36	50.0	104.9	582.9	41.9	362.7	380.5	279.9	619.3	171.5	162.8	19.8	2.8
280	3160	350.5	333.5	208.5	830.1	310.1	702.1	718.1	190.0	36	50.0	110.0	617.5	41.9	388.6	405.9	300.0	682.8	178.6	170.2	19.8	3.0
300	3164	367.3	350.3	213.1	880.1	329.9	741.9	757.9	199.9	36	50.0	115.1	662.9	41.9	414.8	432.1	320.0	720.9	183.4	175.0	19.8	0.0
320	3168	386.8	365.5	222.3	950.0	359.9	802.1	818.1	220.0	36	50.0	119.9	697.0	41.9	439.7	457.2	339.9	755.9	192.5	181.9	19.8	0.0
340	3172	385.1	368.0	225.3	1000.0	359.9	832.1	848.1	220.0	36	50.0	119.9	724.7	41.9	466.1	483.6	350.0	809.8	195.8	187.5	19.8	2.3
360	3176	402.1	378.7	233.7	1039.9	359.9	862.1	878.1	220.0	36	50.0	119.9	740.9	41,9	469.4	486.7	359.9	822.5	204.2	192.5	19.8	0.0

DIMENSIONS

IMPERIAL - IP Flange - Round
1-1/8 THRU 2 INCH

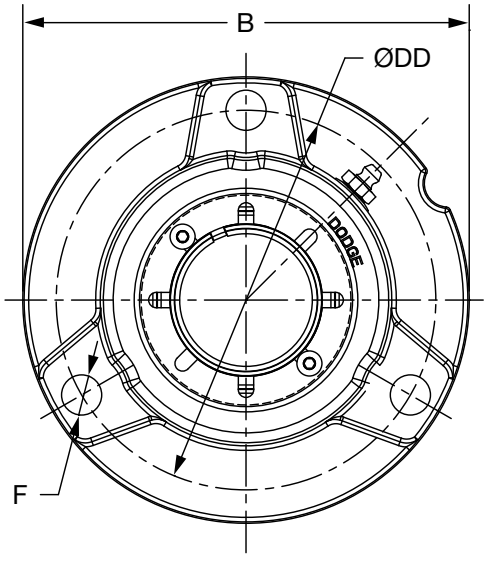

1-1/8" THRU 1-1/2"
CONSTRUCTION

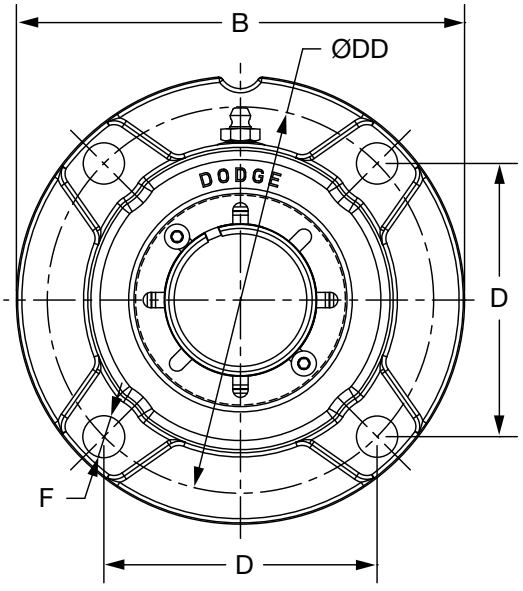

1-5/8" - 2"
CONSTRUCTION

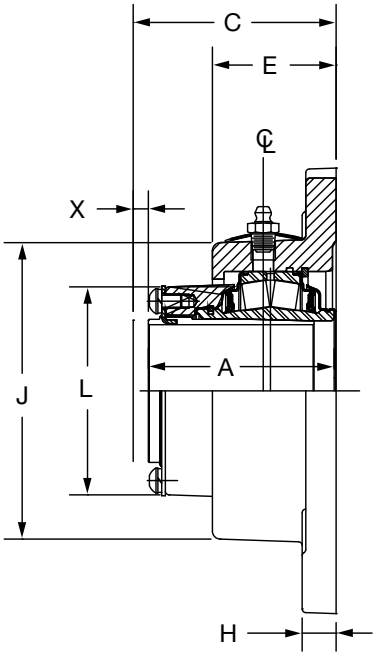

EXPANSION

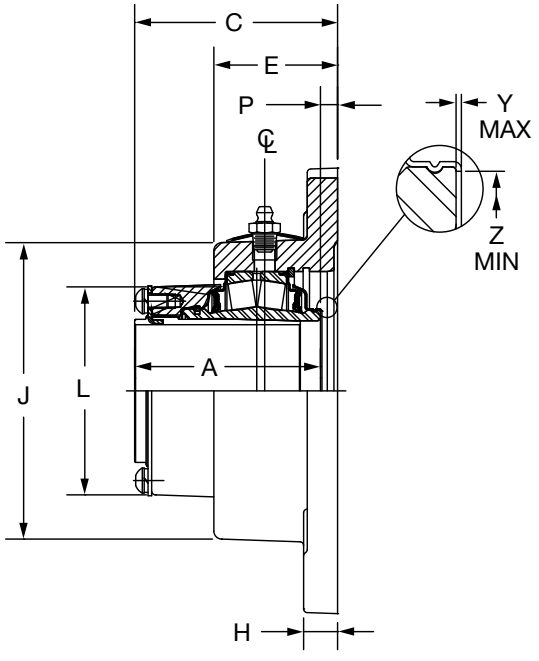

NON-EXPANSION

NOTE: See page B14-64 for 2-3/16 thru 3 inch

DIMENSIONS



IMPERIAL - IP Flange - Round
1-1/8 THRU 2 INCH

Bearing	Shaft Size Inch	TRIDENT Seal				Labyrinth Seal			
		Non-Expansion		Expansion		Non-Expansion		Expansion	
		Part No.	Part Name	Part No.	Part Name	Part No.	Part Name	Part No.	Part Name
22208	1-1/8		F3R-IP-102R	**069630**	F3R-IP-102RE	**069651**	F3R-IP-102L	**069672**	F3R-IP-102LE
	1-3/16	**069593**	F3R-IP-103R	**069631**	F3R-IP-103RE	**069652**	F3R-IP-103L	**069673**	F3R-IP-103LE
	1 -1/4	**069594**	F3R-IP-104R	**069632**	F3R-IP-104RE	**069653**	F3R-IP-104L	**069674**	F3R-IP-104LE
	1 -3/8	**069595**	F3R-IP-106R	**069633**	F3R-IP-106RE	**069654**	F3R-IP-106L	**069675**	F3R-IP-106LE
	1 -7/16	**069596**	F3R-IP-107R	**069634**	F3R-IP-107RE	**069655**	F3R-IP-107L	**069676**	F3R-IP-107LE
	1-1/2	**069597**	F3R-IP-108R	**069635**	F3R-IP-108RE	**069656**	F3R-IP-108L	**069677**	F3R-IP-108LE
22209	1-5/8	**069598**	F4R-IP-110R	**069636**	F4R-IP-110RE	**069657**	F4R-IP-110L	**069678**	F4R-IP-110LE
	1 -11/16	**069599**	F4R-IP-111R	**069637**	F4R-IP-111RE	**069658**	F4R-IP-111L	**069679**	F4R-IP-111LE
	1-3/4	**069600**	F4R-IP-112R	**069638**	F4R-IP-112RE	**069659**	F4R-IP-112L	**069680**	F4R-IP-112LE
22210	1 -7/8	**069601**	F4R-IP-114R	**069639**	F4R-IP-114RE	**069660**	F4R-IP-114L	**069681**	F4R-IP-114LE
	1-15/16	**069602**	F4R-IP-115R	**069640**	F4R-IP-115RE	**069661**	F4R-IP-115L	**069682**	F4R-IP-115LE
	2	**069603**	F4R-IP-200R	**069641**	F4R-IP-200RE	**069662**	F4R-IP-200L	**069683**	F4R-IP-200LE

Metric shaft sizes available upon request

Shaft Size	A	B	C	D	DD	E	F Bolt Dia.	H	J	L	P	X Total Exp	Y	Z
1-1/8 1-3/16 1 -1/4 1 -3/8 1 -7/16 1-1/2	2.63	5.88	2.86	3.53	5.00	1.80	*1/2	0.50	3.75	2.72	0.23	3/16	0.02	1.80
1-5/8 1 -11/16 1-3/4	2.81	6.38	3.11	3.89	5.50	1.89	*1/2	0.50	4.25	3.00	0.27	1/4	0.02	2.08
1 -7/8 1-15/16 2	2.86	6.69	3.16	4.06	5.75	1.92	**1/2	0.56	4.50	3.28	0.27	1/4	0.02	2.30

* 3 Equally spaced bolt holes

** 4 Equally spaced bolt holes

DIMENSIONS

IMPERIAL - IP Flange - Round
2-3/16 THRU 3 INCH

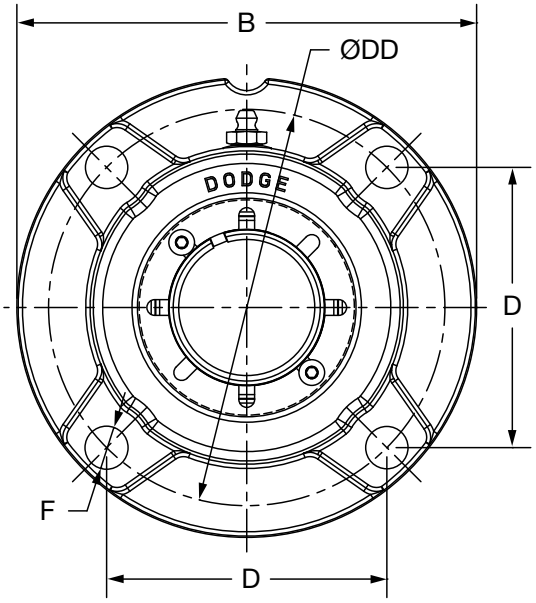

2-3/16" - 3"
CONSTRUCTION

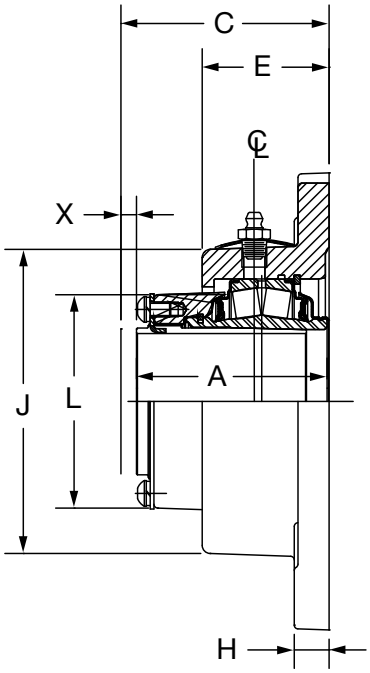

EXPANSION

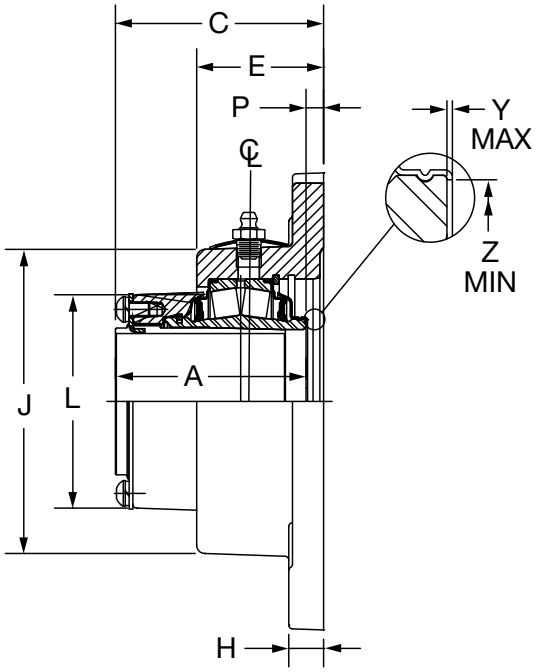

NON-EXPANSION

NOTE: See page B14-62 for 1-1/8 thru 2 inch



IMPERIAL - IP Flange - Round
2-3/16 THRU 3 INCH

Bearing	Shaft Size Inch	TRIDENT Seal				Labyrinth Seal			
		Non-Expansion		Expansion		Non-Expansion		Expansion	
		Part No.	Part Name	Part No.	Part Name	Part No.	Part Name	Part No.	Part Name
22211	2-3/16	**069604**	F4R-IP-203R	**069642**	F4R-IP-203RE	**069663**	F4R-IP-203L	**069684**	F4R-IP-203LE
	2-1/4	**069605**	F4R-IP-204R	**069643**	F4R-IP-204RE	**069664**	F4R-IP-204L	**069685**	F4R-IP-204LE
22213	2-3/8	**069606**	F4R-IP-206R	**069644**	F4R-IP-206RE	**069665**	F4R-IP-206L	**069686**	F4R-IP-206LE
	2-7/16	**069607**	F4R-IP-207R	**069645**	F4R-IP-207RE	**069666**	F4R-IP-207L	**069687**	F4R-IP-207LE
	2-1/2	**069608**	F4R-IP-208R	**069646**	F4R-IP-208RE	**069667**	F4R-IP-208L	**069688**	F4R-IP-208LE
22215	2-11/16	**069609**	F4R-IP-211R	**069647**	F4R-IP-211RE	**069668**	F4R-IP-211L	**069689**	F4R-IP-211LE
	2-3/4	**069610**	F4R-IP-212R	**069648**	F4R-IP-212RE	**069669**	F4R-IP-212L	**069690**	F4R-IP-212LE
	2-15/16	**069611**	F4R-IP-215R	**069649**	F4R-IP-215RE	**069670**	F4R-IP-215L	**069691**	F4R-IP-215LE
	3	**069612**	F4R-IP-300R	**069650**	F4R-IP-300RE	**069671**	F4R-IP-300L	**069692**	F4R-IP-300LE

Metric shaft sizes available upon request

Shaft Size	A	B	C	D	DD	E	F Bolt Dia.	H	J	L	P	X Total Exp	Y	Z
2-3/16 2-1/4	3.03	7.38	3.34	4.50	6.38	2.05	5/8	0.56	4.80	3.50	0.31	1/4	0.03	2.60
2-3/8 2-7/16 2-1/2	3.42	7.75	3.73	4.77	6.75	2.38	5/8	0.64	5.38	3.88	0.31	1/4	0.03	2.95
2-11/16 2-3/4 2-15/16 3	3.50	9.25	3.81	5.56	7.88	2.39	3/4	0.75	6.25	4.28	0.31	1/4	0.03	3.47

FEATURES/BENEFITS PAGE B14-2	SPECIFICATIONS PAGE B14-5	HOW TO ORDER/NOMENCLATUE PAGE B14-8	SELECTION PAGE B14-14

DIMENSIONS

IMPERIAL - IP Flange - Square
1-1/8 THRU 2-1/4 INCH

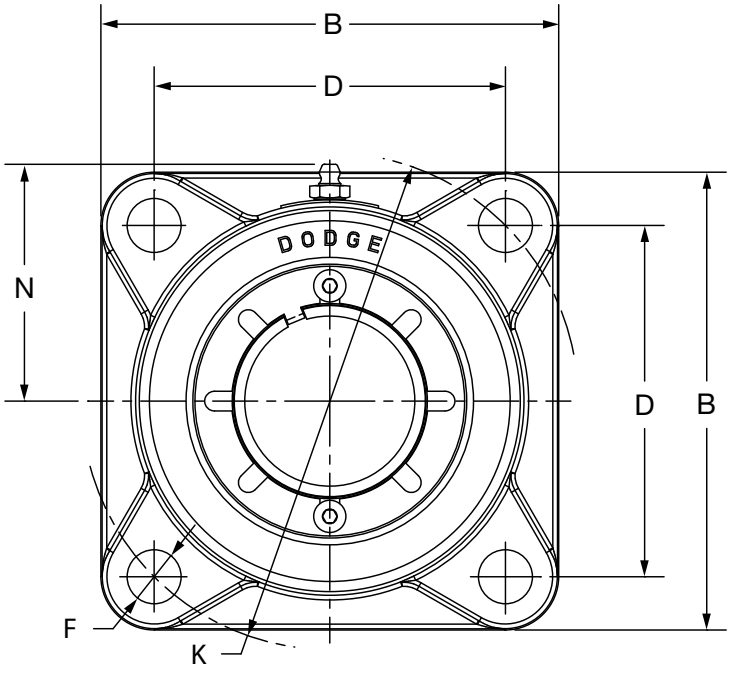

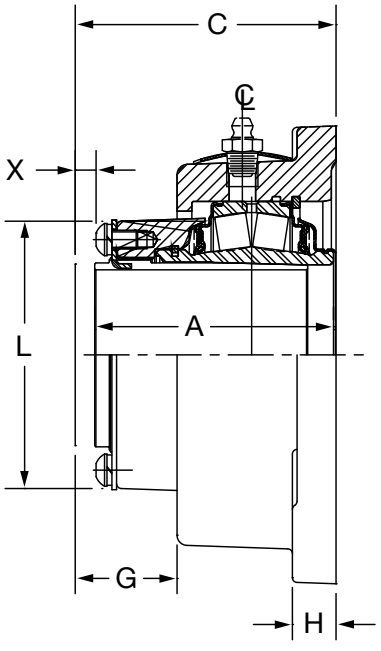

EXPANSION

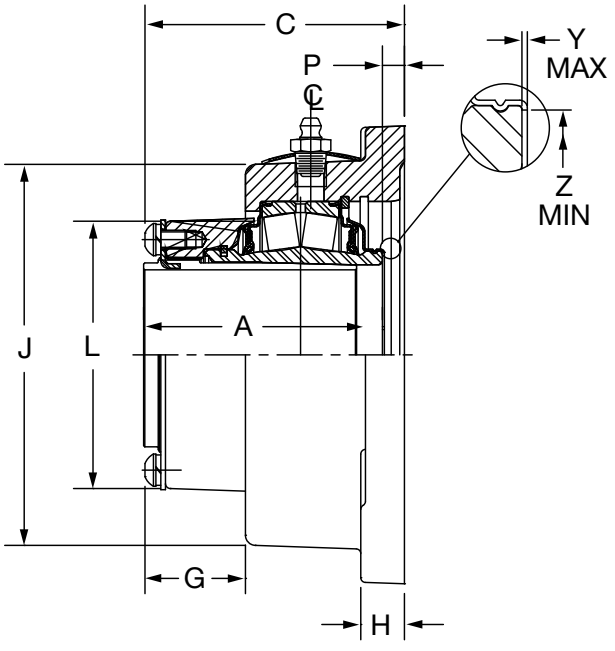

NON-EXPANSION

NOTE: See page B14-68 for 2-3/8 thru 4 inch

FEATURES/BENEFITS PAGE B14-2	SPECIFICATIONS PAGE B14-5	HOW TO ORDER/NOMENCLATUE PAGE B14-8	SELECTION PAGE B14-14

DIMENSIONS



IMPERIAL - IP Flange - Square
1-1/8 THRU 2-1/4 INCH

Bearing	Shaft Size Inch	TRIDENT Seal				Labyrinth Seal			
		Non-Expansion		Expansion		Non-Expansion		Expansion	
		Part No.	Part Name	Part No.	Part Name	Part No.	Part Name	Part No.	Part Name
22208	1-1/8	**069693**	F4S-IP-102R	**069721**	F4S-IP-102RE	**069749**	F4S-IP-102L	**069777**	F4S-IP-102LE
	1-3/16	**069694**	F4S-IP-103R	**069722**	F4S-IP-103RE	**069750**	F4S-IP-103L	**069778**	F4S-IP-103LE
	1-1/4	**069695**	F4S-IP-104R	**069723**	F4S-IP-104RE	**069751**	F4S-IP-104L	**069779**	F4S-IP-104LE
	1-3/8	**069696**	F4S-IP-106R	**069724**	F4S-IP-106RE	**069752**	F4S-IP-106L	**069780**	F4S-IP-106LE
	1-7/16	**069697**	F4S-IP-107R	**069725**	F4S-IP-107RE	**069753**	F4S-IP-107L	**069781**	F4S-IP-107LE
	1-1/2	**069698**	F4S-IP-108R	**069726**	F4S-IP-108RE	**069754**	F4S-IP-108L	**069782**	F4S-IP-108LE
22209	1-5/8	**069699**	F4S-IP-110R	**069727**	F4S-IP-110RE	**069755**	F4S-IP-110L	**069783**	F4S-IP-110LE
	1-11/16	**069700**	F4S-IP-111R	**069728**	F4S-IP-111RE	**069756**	F4S-IP-111L	**069784**	F4S-IP-111LE
	1-3/4	**069701**	F4S-IP-112R	**069729**	F4S-IP-112RE	**069757**	F4S-IP-112L	**069785**	F4S-IP-112LE
22210	1-7/8	**069702**	F4S-IP-114R	**069730**	F4S-IP-114RE	**069758**	F4S-IP-114L	**069786**	F4S-IP-114LE
	1-15/16	**069703**	F4S-IP-115R	**069731**	F4S-IP-115RE	**069759**	F4S-IP-115L	**069787**	F4S-IP-115LE
	2	**069704**	F4S-IP-200R	**069732**	F4S-IP-200RE	**069760**	F4S-IP-200L	**069788**	F4S-IP-200LE
22211	2-3/16	**069705**	F4S-IP-203R	**069733**	F4S-IP-203RE	**069761**	F4S-IP-203L	**069789**	F4S-IP-203LE
	2-1/4	**069706**	F4S-IP-204R	**069734**	F4S-IP-204RE	**069762**	F4S-IP-204L	**069790**	F4S-IP-204LE

Metric shaft sizes available upon request

Shaft Size	A	B	C	D	F Bolt Dia.	G	H	J	K	L	N	P	X Total Exp.	Y	Z
1-1/8 1-3/16 1-1/4 1-3/8 1-7/16 1-1/2	2.63	4.75	2.86	3.53	1/2	1.08	0.50	3.81	5.00	2.72	2.48	0.23	3/16	0.02	1.80
1-5/8 1-11/16 1-3/4	2.81	5.13	3.11	3.89	1/2	1.20	0.50	4.41	5.50	3.00	2.78	0.30	1/4	0.02	2.08
1-7/8 1-15/16 2	2.86	5.30	3.16	4.06	1/2	1.23	0.56	4.97	5.75	3.28	2.91	0.30	1/4	0.02	2.30
2-3/16 2-1/4	3.03	5.88	3.34	4.52	5/8	1.31	0.56	5.02	6.38	3.80	3.09	0.31	1/4	0.02	2.60

FEATURES/BENEFITS PAGE B14-2	SPECIFICATIONS PAGE B14-5	HOW TO ORDER/NOMENCLATUE PAGE B14-8	SELECTION PAGE B14-14

DIMENSIONS

IMPERIAL - IP Flange - Square
2-3/8 THRU 4 INCH

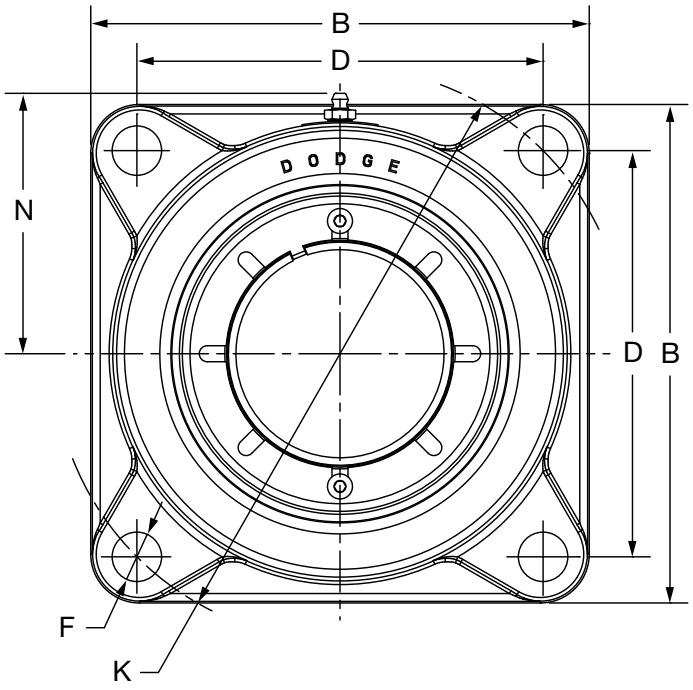

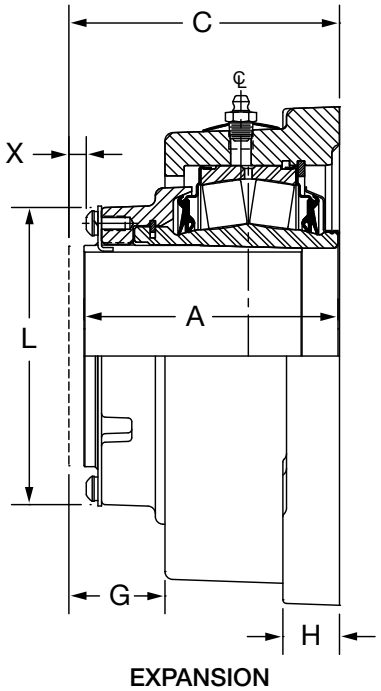

EXPANSION

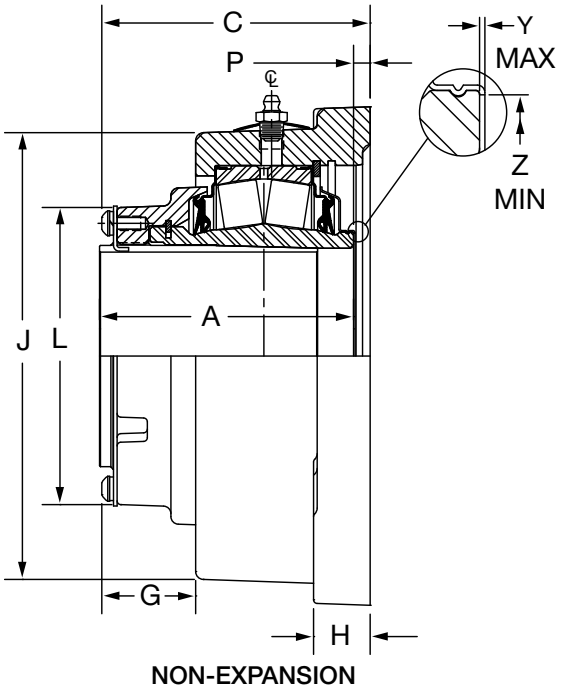

NON-EXPANSION

NOTE: See page B14-66 for 1-1/8 thru 2-1/4 inch

FEATURES/BENEFITS PAGE B14-2	SPECIFICATIONS PAGE B14-5	HOW TO ORDER/NOMENCLATUE PAGE B14-8	SELECTION PAGE B14-14

DIMENSIONS



IMPERIAL - IP Flange - Square
2-3/8 THRU 4 INCH

Bearing	Shaft Size Inch	TRIDENT Seal				Labyrinth Seal			
		Non-Expansion		Expansion		Non-Expansion		Expansion	
		Part No.	Part Name	Part No.	Part Name	Part No.	Part Name	Part No.	Part Name
22213	2-3/8	**069707**	F4S-IP-206R	**069735**	F4S-IP-206RE	**069763**	F4S-IP-206L	**069791**	F4S-IP-206LE
	2-7/16	**069708**	F4S-IP-207R	**069736**	F4S-IP-207RE	**069764**	F4S-IP-207L	**069792**	F4S-IP-207LE
	2-1/2	**069709**	F4S-IP-208R	**069737**	F4S-IP-208RE	**069765**	F4S-IP-208L	**069793**	F4S-IP-208LE
22215	2-11/16	**069710**	F4S-IP-211R	**069738**	F4S-IP-211RE	**069766**	F4S-IP-211L	**069794**	F4S-IP-211LE
	2-3/4	**069711**	F4S-IP-212R	**069739**	F4S-IP-212RE	**069767**	F4S-IP-212L	**069795**	F4S-IP-212LE
	2-15/16	**069712**	F4S-IP-215R	**069740**	F4S-IP-215RE	**069768**	F4S-IP-215L	**069796**	F4S-IP-215LE
	3	**069713**	F4S-IP-300R	**069741**	F4S-IP-300RE	**069769**	F4S-IP-300L	**069797**	F4S-IP-300LE
22218	3-3/16	**069714**	F4S-IP-303R	**069742**	F4S-IP-303RE	**069770**	F4S-IP-303L	**069798**	F4S-IP-303LE
	3-1/4	**069715**	F4S-IP-304R	**069743**	F4S-IP-304RE	**069771**	F4S-IP-304L	**069799**	F4S-IP-304LE
	3-7/16	**069716**	F4S-IP-307R	**069744**	F4S-IP-307RE	**069772**	F4S-IP-307L	**069800**	F4S-IP-307LE
	3-1/2	**069717**	F4S-IP-308R	**069745**	F4S-IP-308RE	**069773**	F4S-IP-308L	**069801**	F4S-IP-308LE
22220	3-11/16	**069718**	F4S-IP-311R	**069746**	F4S-IP-311RE	**069774**	F4S-IP-311L	**069802**	F4S-IP-311LE
	3-15/16	**069719**	F4S-IP-315R	**069747**	F4S-IP-315RE	**069775**	F4S-IP-315L	**069803**	F4S-IP-315LE
	4	**069720**	F4S-IP-400R	**069748**	F4S-IP-400RE	**069776**	F4S-IP-400L	**069804**	F4S-IP-400LE

Metric shaft sizes available upon request

Shaft Size	A	B	C	D	F Bolt Dia.	G	H	J	K	L	N	P	X Total Exp.	Y	Z
2-3/8 2-7/16 2-1/2	3.42	6.13	3.73	4.78	5/8	1.36	0.64	5.63	6.75	3.88	3.41	0.31	1/4	0.03	2.95
2-11/16 2-3/4 2-15/16 3	3.50	7.18	3.81	5.56	3/4	1.42	0.75	6.50	7.88	4.28	3.84	0.31	1/4	0.03	3.47
3-3/16 3-1/4 3-7/16 3-1/2	4.17	8.25	4.48	6.72	3/4	1.59	0.94	7.48	9.50	5.00	4.33	0.31	1/4	0.03	4.05
3-11/16 3-15/16 4	4.70	9.25	5.08	7.61	7/8	1.78	1.06	8.22	10.75	5.56	4.70	0.38	5/16	0.03	4.50

FEATURES/BENEFITS PAGE B14-2	SPECIFICATIONS PAGE B14-5	HOW TO ORDER/NOMENCLATUE PAGE B14-8	SELECTION PAGE B14-14

DIMENSIONS

IMPERIAL - IP Flange - Square with Type E Dimensions
1-3/8 THRU 2-3/16 INCH

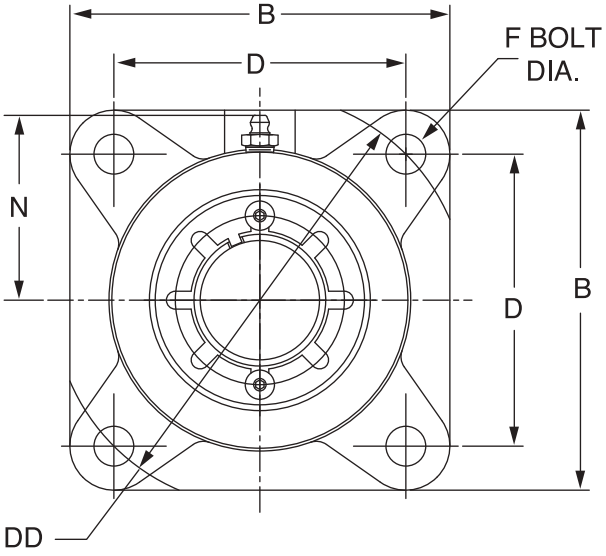

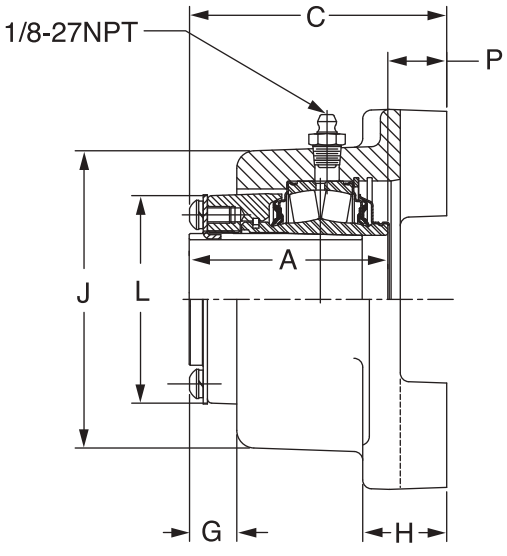

NON-EXPANSION

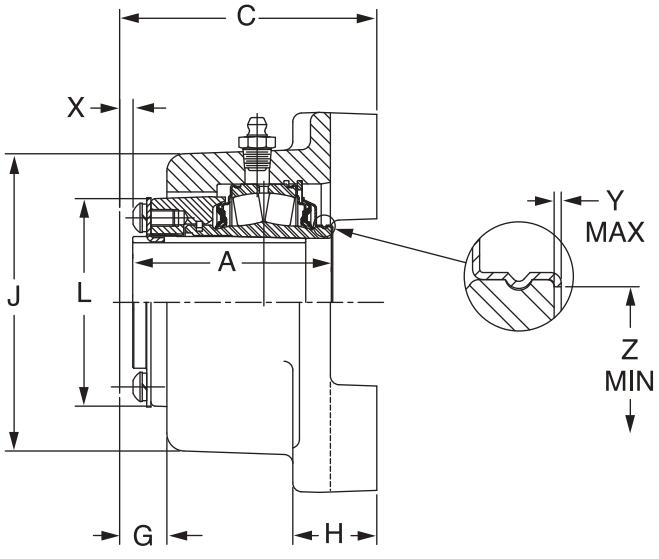

EXPANSION

NOTE: See page B14-72 for 2-1/4 thru 4-1/2 inch



IMPERIAL - IP Flange - Square with Type E Dimensions
1-3/8 THRU 2-3/16 INCH

Bearing Series	Shaft Size*	TRIDENT Seal				Labyrinth Seal			
		Non-Expansion		Expansion		Non-Expansion		Expansion	
		Part No.	Part Name	Part No.	Part Name	Part No.	Part Name	Part No.	Part Name
22208	1-3/8	**071288**	EF4B-IP-106R	**071313**	EF4B-IP-106RE	**071338**	EF4B-IP-106L	**071364**	EF4B-IP-106LE
	1-7/16	**071289**	EF4B-IP-107R	**071314**	EF4B-IP-107RE	**071339**	EF4B-IP-107L	**071365**	EF4B-IP-107LE
22209	1-1/2	**071290**	EF4B-IP-108R	**071315**	EF4B-IP-108RE	**071340**	EF4B-IP-108L	**071366**	EF4B-IP-108LE
	1-5/8	**071291**	EF4B-IP-110R	**071316**	EF4B-IP-110RE	**071341**	EF4B-IP-110L	**071367**	EF4B-IP-110LE
	1-11/16	**071292**	EF4B-IP-111R	**071317**	EF4B-IP-111RE	**071342**	EF4B-IP-111L	**071368**	EF4B-IP-111LE
22210	1-3/4	**071293**	EF4B-IP-112R	**071318**	EF4B-IP-112RE	**071343**	EF4B-IP-112L	**071369**	EF4B-IP-112LE
	1-7/8	**071294**	EF4B-IP-114R	**071319**	EF4B-IP-114RE	**071344**	EF4B-IP-114L	**071370**	EF4B-IP-114LE
	1-15/16	**071295**	EF4B-IP-115R	**071320**	EF4B-IP-115RE	**071345**	EF4B-IP-115L	**071371**	EF4B-IP-115LE
	2	**071296**	EF4B-IP-200R	**071321**	EF4B-IP-200RE	**071346**	EF4B-IP-200L	**071372**	EF4B-IP-200LE
22211	2-3/16	**071297**	EF4B-IP-203R	**071322**	EF4B-IP-203RE	**071347**	EF4B-IP-203L	**071373**	EF4B-IP-203LE

*Consult Dodge For Sizes Not Listed

Shaft Size	A	B#	C#	D	DD	Bolt Dia.	G	H#	J#	L	N	P	X Total Exp.	Y	Z
1-3/8 1-7/16	2.63	4.63	3.15	3.50	4.95	1/2	0.66	1.06	3.88	2.72	2.34	0.53	5/32	0.02	1.80
1-1/2 1-5/8 1-11/16	2.81	5.38	3.64	4.13	5.83	1/2	0.67	1.19	4.18	3.00	2.50	0.83	3/16	0.02	2.08
1-3/4 1-7/8 1-15/16 2	2.86	5.63	3.64	4.38	6.19	1/2	0.65	1.18	4.36	3.28	2.60	0.79	7/32	0.02	2.30
2-3/16	3.03	6.25	3.96	4.88	6.90	5/8	0.68	1.38	4.88	3.50	2.88	0.94	1/4	0.02	2.60

Note(S): "P" Dimension Is For Non-Expansion Only
"A" And "P" Dimensions Do Not Include "Y" Dimension
Reference Dimension Only

DIMENSIONS

IMPERIAL - IP Flange - Square with Type E Dimensions
2-1/4 THRU 4-1/2 INCH

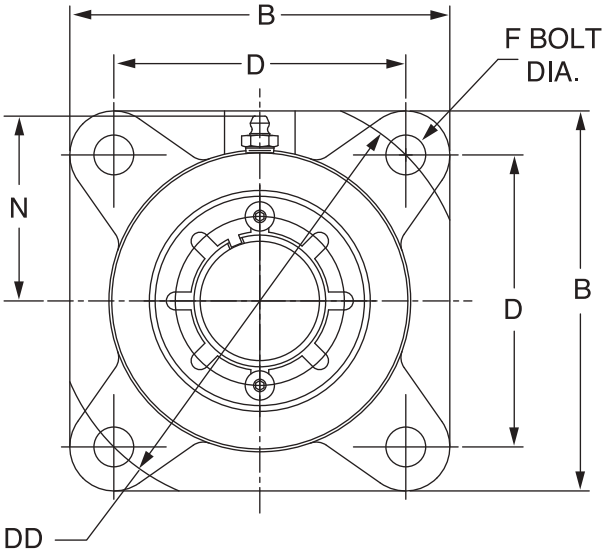

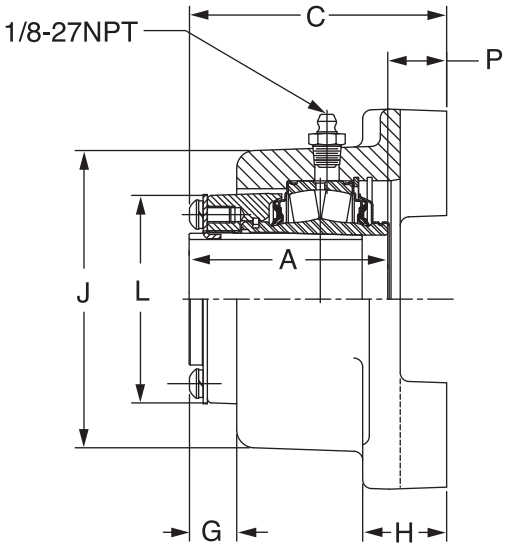

NON-EXPANSION

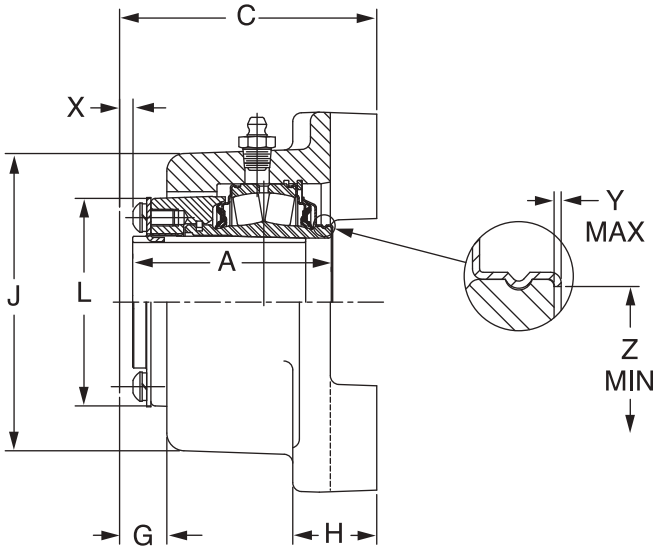

EXPANSION

NOTE: See page B14-70 for 1-3/8 thru 2-3/16 inch



IMPERIAL - IP Flange - Square with Type E Dimensions
2-1/4 THRU 4-1/2 INCH

Bearing Series	Shaft Size*	TRIDENT Seal				Labyrinth Seal			
		Non-Expansion		Expansion		Non-Expansion		Expansion	
		Part No.	Part Name	Part No.	Part Name	Part No.	Part Name	Part No.	Part Name
22213	2-1/4	**071298**	EF4B-IP-204R	**071323**	EF4B-IP-204RE	**071348**	EF4B-IP-204L	**071374**	EF4B-IP-204LE
	2-7/16	**071299**	EF4B-IP-207R	**071324**	EF4B-IP-207RE	**071349**	EF4B-IP-207L	**071375**	EF4B-IP-207LE
	2-1/2	**071300**	EF4B-IP-208R	**071325**	EF4B-IP-208RE	**071350**	EF4B-IP-208L	**071376**	EF4B-IP-208LE
22215	2-11/16	**071301**	EF4B-IP-211R	**071326**	EF4B-IP-211RE	**071351**	EF4B-IP-211L	**071377**	EF4B-IP-211LE
	2-3/4	**071302**	EF4B-IP-212R	**071327**	EF4B-IP-212RE	**071352**	EF4B-IP-212L	**071378**	EF4B-IP-212LE
	2-15/16	**071303**	EF4B-IP-215R	**071328**	EF4B-IP-215RE	**071353**	EF4B-IP-215L	**071379**	EF4B-IP-215LE
	3	**071304**	EF4B-IP-300R	**071329**	EF4B-IP-300RE	**071354**	EF4B-IP-300L	**071380**	EF4B-IP-300LE
22218	3-3/16	**071305**	EF4B-IP-303R	**071330**	EF4B-IP-303RE	**071355**	EF4B-IP-303L	**071381**	EF4B-IP-303LE
	3-1/4	**071306**	EF4B-IP-304R	**071331**	EF4B-IP-304RE	**071356**	EF4B-IP-304L	**071382**	EF4B-IP-304LE
	3-7/16	**071307**	EF4B-IP-307R	**071332**	EF4B-IP-307RE	**071357**	EF4B-IP-307L	**071383**	EF4B-IP-307LE
	3-1/2	**071308**	EF4B-IP-308R	**071333**	EF4B-IP-308RE	**071358**	EF4B-IP-308L	**071384**	EF4B-IP-308LE
22220	3-15/16	**071309**	EF4B-IP-315R	**071334**	EF4B-IP-315RE	**071359**	EF4B-IP-315L	**071385**	EF4B-IP-315LE
	4	**071310**	EF4B-IP-400R	**071335**	EF4B-IP-400RE	**071360**	EF4B-IP-400L	**071386**	EF4B-IP-400LE
22222	4-7/16	**071311**	EF4B-IP-407R	**071336**	EF4B-IP-407RE	**071361**	EF4B-IP-407L	**071387**	EF4B-IP-407LE
	4-1/2	**071312**	EF4B-IP-408R	**071337**	EF4B-IP-408RE	**071362**	EF4B-IP-408L	**071388**	EF4B-IP-408LE

*Consult Dodge For Sizes Not Listed

Shaft Size*	A	B#	C#	D	DD	F Bolt Dia	G	H#	J#	L	N	P	X Total Exp.	Y	Z
2-1/4 2-7/16 2-1/2	3.42	6.88	4.41	5.37	7.60	5/8	1.04	1.50	5.81	3.88	3.32	0.99	1/4	0.03	2.95
2-11/16 2-3/4 2-15/16 3	3.50	7.75	4.59	6.00	8.49	3/4	0.79	1.61	6.30	4.28	3.58	1.1	1/4	0.03	3.47
3-3/16 3-1/4 3-7/16 3-1/2	4.17	9.25	5.4	7.00	9.90	3/4	1.12	1.88	7.44	5	4.15	1.24	1/4	0.03	4.05
3-15/16 4	4.70	10.25	6.73	7.75	10.96	7/8	1.22	2.12	8.27	5.56	4.58	2.02	5/16	0.03	4.50
4-7/16 4-1/2	5.23	10.88	7.12	8.75	12.37	7/8	1.42	2.43	9.13	6.44	5.01	1.89	3/8	0.04	5.00

Note(S): "P" Dimension Is For Non-Expansion Only
"A" And "P" Dimensions Do Not Include "Y" Dimension
Reference Dimension Only

FEATURES/BENEFITS PAGE B14-2	SPECIFICATIONS PAGE B14-5	HOW TO ORDER/NOMENCLATUE PAGE B14-8	SELECTION PAGE B14-14

DIMENSIONS

Steel IMPERIAL-HD Flange - 4 Bolt
1-1/8 THRU 2-1/4 INCH

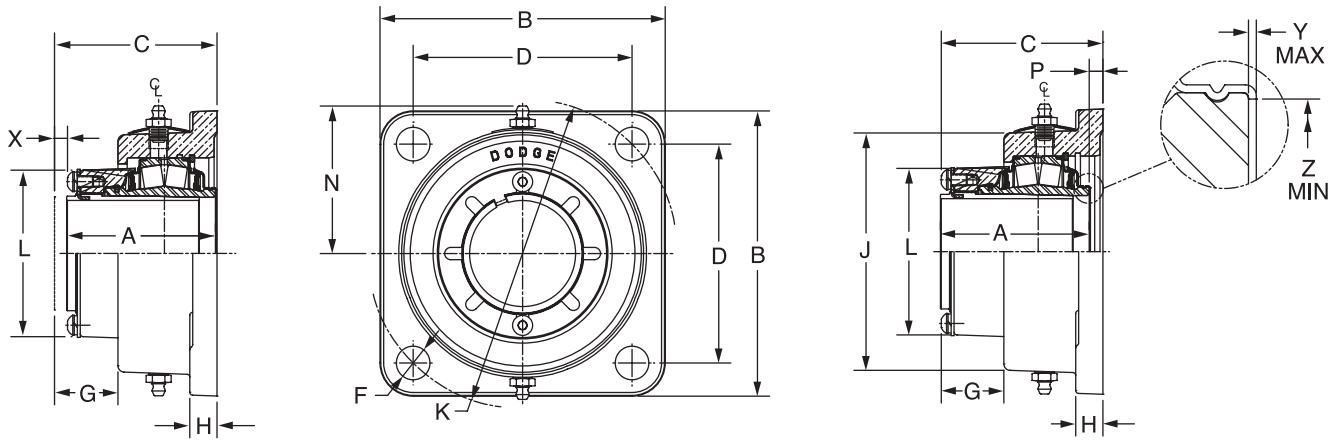

EXPANSION NON-EXPANSION

Shaft Size	Dodge Non-Expansion		Dodge Expansion	
	Dodge Part No.	Description	Dodge Part No.	Description
1-1/8	**072170**	SF4S-IP-102R	**072198**	SF4S-IP-102RE
1-3/16	**072171**	SF4S-IP-103R	**072199**	SF4S-IP-103RE
1-1/4	**072172**	SF4S-IP-104R	**072200**	SF4S-IP-104RE
1-3/8	**072173**	SF4S-IP-106R	**072201**	SF4S-IP-106RE
1-7/16	**072174**	SF4S-IP-107R	**072202**	SF4S-IP-107RE
1-1/2	**072175**	SF4S-IP-108R	**072203**	SF4S-IP-108RE
1-5/8	**072176**	SF4S-IP-110R	**072204**	SF4S-IP-110RE
1-11/16	**072177**	SF4S-IP-111R	**072205**	SF4S-IP-111RE
1-3/4	**072178**	SF4S-IP-112R	**072206**	SF4S-IP-112RE
1-7/8	**072179**	SF4S-IP-114R	**072207**	SF4S-IP-114RE
1-15/16	**072180**	SF4S-IP-115R	**072208**	SF4S-IP-115RE
2	**072181**	SF4S-IP-200R	**072209**	SF4S-IP-200RE
2-3/16	**072182**	SF4S-IP-203R	**072210**	SF4S-IP-203RE
2-1/4	**072183**	SF4S-IP-204R	**072211**	SF4S-IP-204RE

Shaft Size	A	B	C	D	F Bolt Dia.	G	H	J	K	L	N	P	X Total Exp	Y	Z
1-1/8 1-3/16 1-1/4 1-3/8 1-7/16 1-1/2	2.63	4.62	2.87	3.54	1/2	0.84	0.88	3.70	5.00	2.72	2.25	0.24	3/16	0.02	1.80
1-5/8 1-11/16 1-3/4	2.81	5.37	3.01	3.89	1/2	0.91	0.88	4.41	5.50	3.00	2.62	0.20	7/32	0.02	2.08
1-7/8 1-15/16 2	2.86	5.18	3.15	4.07	1/2	0.91	0.91	4.66	5.75	3.28	2.75	0.29	7/32	0.02	2.30
2-3/16 2-1/4	3.03	5.87	3.26	4.51	5/8	0.93	0.75	5.03	6.38	3.50	2.93	0.23	1/4	0.02	2.60

"P" Dimension Is For Non-Expansion Only

"A" & "P" Dimensions Do Not Include "Y" Dimension

FEATURES/BENEFITS PAGE B14-2	SPECIFICATIONS PAGE B14-5	HOW TO ORDER/NOMENCLATUE PAGE B14-8	SELECTION PAGE B14-14

DIMENSIONS



Steel IMPERIAL-HD Flange - 4 Bolt
2-3/8 THRU 4 INCH

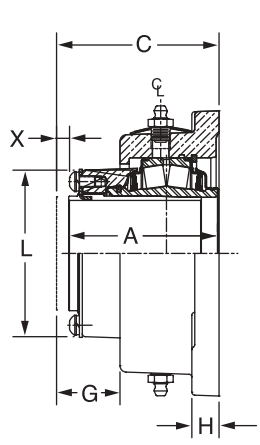

EXPANSION

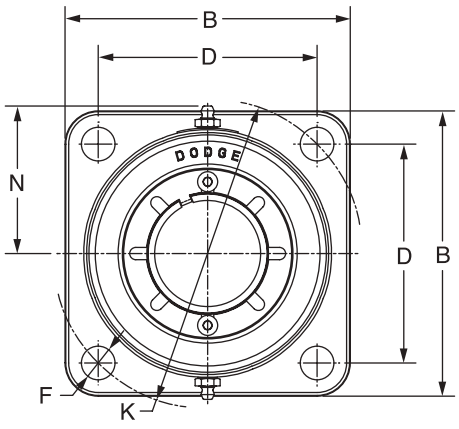

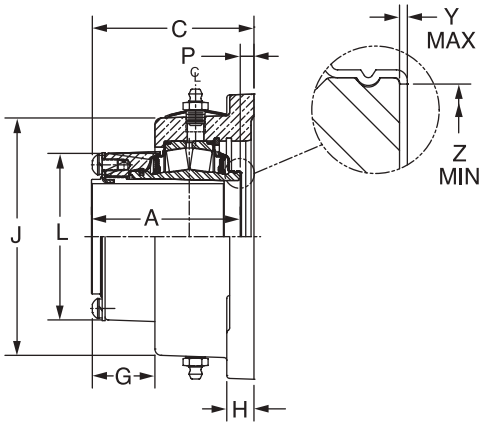

NON-EXPANSION

Shaft Size	Dodge Non-Expansion		Dodge Expansion	
	Dodge Part No.	Description	Dodge Part No.	Description
2-3/8	**072184**	SF4S-IP-206R	**072212**	SF4S-IP-206RE
2-7/16	**072185**	SF4S-IP-207R	**072213**	SF4S-IP-207RE
2-1/2	**072186**	SF4S-IP-208R	**072214**	SF4S-IP-208RE
2-11/16	**072187**	SF4S-IP-211R	**072215**	SF4S-IP-211RE
2-3/4	**072188**	SF4S-IP-212R	**072216**	SF4S-IP-212RE
2-15/16	**072189**	SF4S-IP-215R	**072217**	SF4S-IP-215RE
3	**072190**	SF4S-IP-300R	**072218**	SF4S-IP-300RE
3-3/16	**072191**	SF4S-IP-303R	**072219**	SF4S-IP-303RE
3-1/4	**072192**	SF4S-IP-304R	**072220**	SF4S-IP-304RE
3-7/16	**072193**	SF4S-IP-307R	**072221**	SF4S-IP-307RE
3-1/2	**072194**	SF4S-IP-308R	**072222**	SF4S-IP-308RE
3-11/16	**072195**	SF4S-IP-311R	**072223**	SF4S-IP-311RE
3-15/16	**072196**	SF4S-IP-315R	**072224**	SF4S-IP-315RE
4	**072197**	SF4S-IP-400R	**072225**	SF4S-IP-400RE

Shaft Size	A	B	C	D	F Bolt Dia.	G	H	J	K	L	N	P	X Total Exp	Y	Z
2-3/8 2-7/16 2-1/2	3.42	6.18	3.57	4.77	5/8	0.95	1.00	5.63	6.75	3.80	3.24	0.15	1/4	0.03	2.94
2-11/16 2-3/4 2-15/16 3	3.50	7.18	3.77	5.57	3/4	0.94	1.06	6.51	7.88	4.20	3.67	0.27	1/4	0.03	3.47
3-3/16 3-1/4 3-7/16 3-1/2	4.17	8.37	4.27	6.72	3/4	0.94	1.28	7.49	9.50	5.00	4.16	0.10	1/4	0.03	4.50
3-11/16 3-15/16 4	4.70	9.49	5.07	7.60	1	1.06	1.50	8.22	10.75	5.46	4.55	0.37	5/16	0.03	4.50

'P' Dimension Is For Non-Expansion Only
A' And 'P' Dimensions Do Not Include 'Y' Dimension

FEATURES/BENEFITS PAGE B14-2	SPECIFICATIONS PAGE B14-5	HOW TO ORDER/NOMENCLATUE PAGE B14-8	SELECTION PAGE B14-14

DIMENSIONS

Steel IMPERIAL-HD Flange 4 Bolt With Type E Dimensions

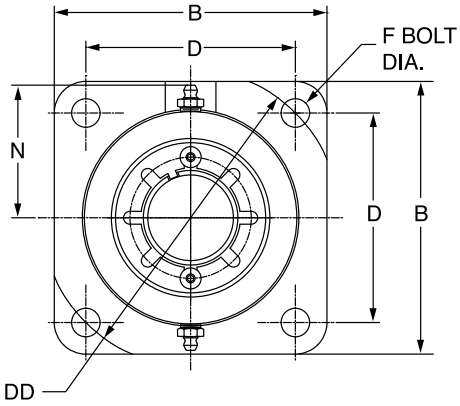

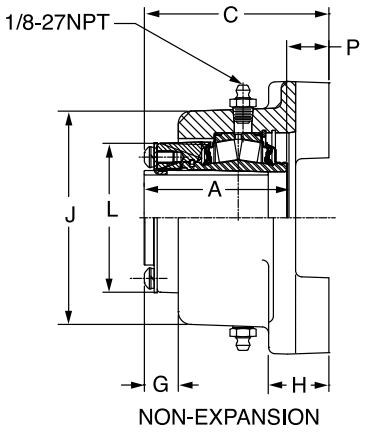

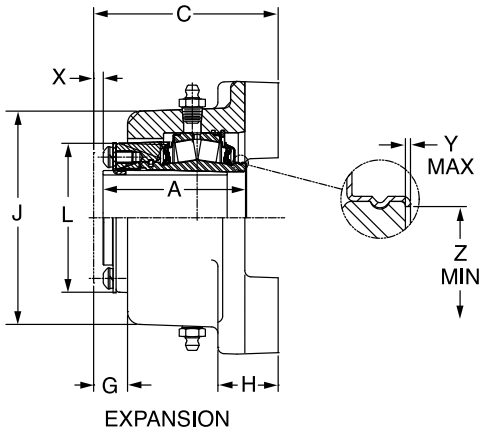

Shaft Size	Dodge Non-Expansion		Dodge Expansion	
	Dodge Part No.	Description	Dodge Part No.	Description
1-3/8	**072226**	SEF4B-IP-106R	**072251**	SEF4B-IP-106RE
1-716	**072227**	SEF4B-IP-107R	**072252**	SEF4B-IP-107RE
1-1/2	**072228**	SEF4B-IP-108R	**072253**	SEF4B-IP-108RE
1-5/8	**072229**	SEF4B-IP-110R	**072254**	SEF4B-IP-110RE
1-11/16	**072230**	SEF4B-IP-111R	**072255**	SEF4B-IP-111RE
1-3/4	**072231**	SEF4B-IP-112R	**072256**	SEF4B-IP-112RE
1-7/8	**072232**	SEF4B-IP-114R	**072257**	SEF4B-IP-114RE
1-15/16	**072233**	SEF4B-IP-115R	**072258**	SEF4B-IP-115RE
2	**072234**	SEF4B-IP-200R	**072259**	SEF4B-IP-200RE
2-3/16	**072235**	SEF4B-IP-203R	**072260**	SEF4B-IP-203RE
2-7/16	**072237**	SEF4B-IP-207R	**072262**	SEF4B-IP-207RE
2-1/2	**072238**	SEF4B-IP-208R	**072263**	SEF4B-IP-208RE
2-11/16	**072239**	SEF4B-IP-211R	**072264**	SEF4B-IP-211RE
2-3/4	**072240**	SEF4B-IP-212R	**072265**	SEF4B-IP-212RE
2-15/16	**072241**	SEF4B-IP-215R	**072266**	SEF4B-IP-215RE
3	**072242**	SEF4B-IP-300R	**072267**	SEF4B-IP-300RE
3-3/16	**072243**	SEF4B-IP-303R	**072268**	SEF4B-IP-303RE
3-1/4	**072244**	SEF4B-IP-304R	**072269**	SEF4B-IP-304RE
3-7/16	**072245**	SEF4B-IP-307R	**072270**	SEF4B-IP-307RE
3-1/2	**072246**	SEF4B-IP-308R	**072271**	SEF4B-IP-308RE
3-15/16	**072247**	SEF4B-IP-315R	**072272**	SEF4B-IP-315RE
4	**072248**	SEF4B-IP-400R	**072273**	SEF4B-IP-400RE
4-7/16	**072249**	SEF4B-IP-407R	**072274**	SEF4B-IP-407RE
4-1/2	**072250**	SEF4B-IP-408R	**072275**	SEF4B-IP-408RE

DIMENSIONS



Steel IMPERIAL-HD Flange 4 Bolt With Type E Dimensions

Shaft Size	A	B	C	D	DD	F Bolt Dia.	G	H	J	L	N	P	X Total Exp	Y	Z
1-3/8 1-716	2.63	4.620	2.87	3.50	4.95	1/2	0.84	0.88	3.7	2.72	2.25	0.24	3/16	0.02	1.80
1-1/2 1-5/8 1-11/16	2.81	5.37	3.01	4.13	5.84	1/2	0.91	0.88	4.41	3.00	2.62	0.20	7/32	0.02	2.08
1-3/4 1-7/8 1-15/16 2	2.86	5.49	3.15	4.38	6.19	1/2	0.91	0.88	4.75	3.28	2.75	0.29	7/32	0.02	2.30
2-3/16	3.03	6.18	3.26	4.87	6.89	5/8	0.93	1.00	5.03	3.50	2.93	0.23	1/4	0.02	2.60
2-7/16 2-1/2	3.42	6.62	3.57	5.37	7.60	5/8	0.95	1.00	5.63	3.80	3.23	0.15	1/4	0.03	2.95
2-11/16 2-3/4 2-15/16 3	3.50	7.43	3.77	6.00	8.49	3/4	0.94	1.06	6.66	4.20	3.75	0.27	1/4	0.03	3.47
3-3/16 3-1/4 3-7/16 3-1/2	4.17	8.62	4.27	7.01	9.91	3/4	0.96	1.31	7.49	5.00	4.17	0.10	1/4	0.03	4.05
3-15/16 4	4.70	9.96	5.04	7.75	10.96	7/8	1.06	1.50	8.22	5.44	4.68	0.34	5/16	0.03	4.50
4-7/16 4-1/2	5.23	10.87	5.59	8.75	12.38	7/8	1.38	1.50	8.76	6.35	4.80	0.36	3/8	0.04	5.00

"P" Dimension Is For Non-Expansion Only
"A" & "P" Dimensions Do Not Include "Y" Dimension

DIMENSIONS

IMPERIAL - IP Piloted Flange
1-1/8 THRU 2-1/2 INCH

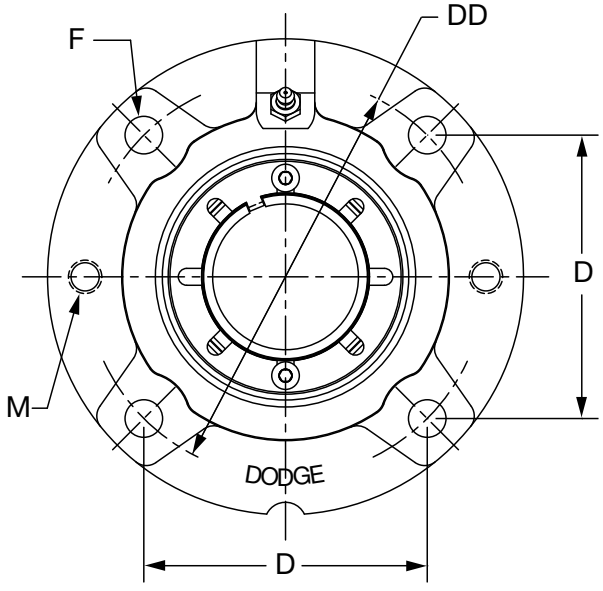

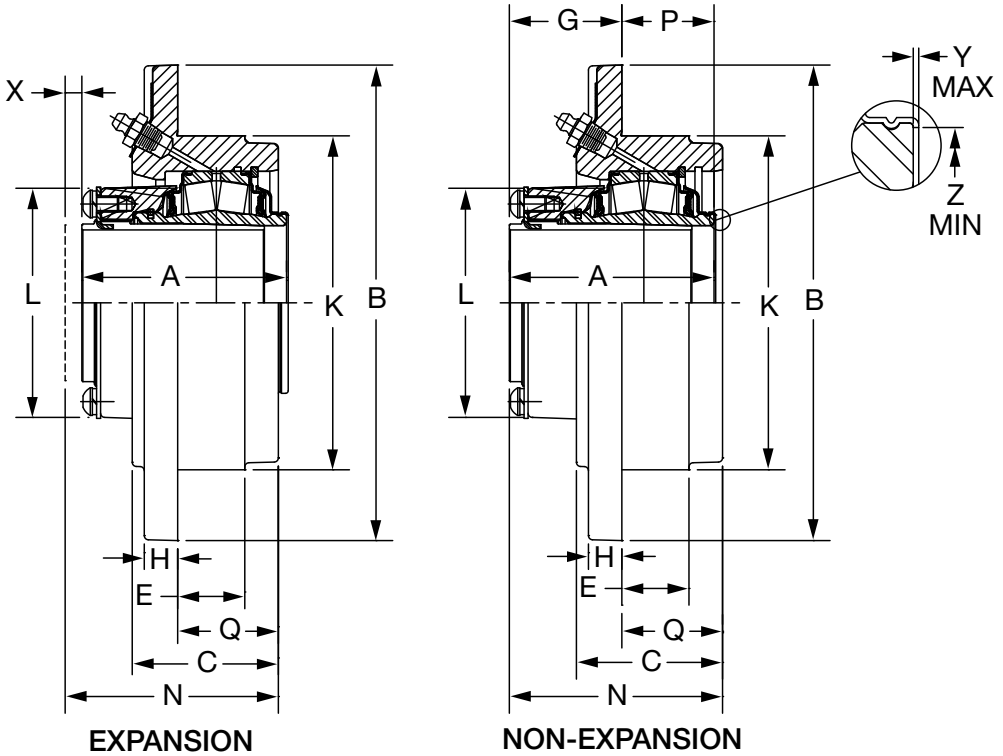

NOTE: See page B14-80 for 2-11/16 thru 5 inch

FEATURES/BENEFITS PAGE B14-2	SPECIFICATIONS PAGE B14-5	HOW TO ORDER/NOMENCLATUE PAGE B14-8	SELECTION PAGE B14-14

DIMENSIONS



IMPERIAL - IP Piloted Flange
1-1/8 THRU 2-1/2 INCH

Bearing	Shaft Size Inch	TRIDENT Seal				Labyrinth Seal			
		Non-Expansion		Expansion		Non-Expansion		Expansion	
		Part No.	Part Name	Part No.	Part Name	Part No.	Part Name	Part No.	Part Name
22208	1-1/8	**069805**	FC-IP-102R	**069837**	FC-IP-102RE	**069869**	FC-IP-102L	**069901**	FC-IP-102LE
	1-3/16	**069806**	FC-IP-103R	**069838**	FC-IP-103RE	**069870**	FC-IP-103L	**069902**	FC-IP-103LE
	1-1/4	**069807**	FC-IP-104R	**069839**	FC-IP-104RE	**069871**	FC-IP-104L	**069903**	FC-IP-104LE
	1-3/8	**069808**	FC-IP-106R	**069840**	FC-IP-106RE	**069872**	FC-IP-106L	**069904**	FC-IP-106LE
	1-7/16	**069809**	FC-IP-107R	**069841**	FC-IP-107RE	**069873**	FC-IP-107L	**069905**	FC-IP-107LE
	1-1/2	**069810**	FC-IP-108R	**069842**	FC-IP-108RE	**069874**	FC-IP-108L	**069906**	FC-IP-108LE
22209	1-5/8	**069811**	FC-IP-110R	**069843**	FC-IP-110RE	**069875**	FC-IP-110L	**069907**	FC-IP-110LE
	1-11/16	**069812**	FC-IP-111R	**069844**	FC-IP-111RE	**069876**	FC-IP-111L	**069908**	FC-IP-111LE
	1-3/4	**069813**	FC-IP-112R	**069845**	FC-IP-112RE	**069877**	FC-IP-112L	**069909**	FC-IP-112LE
22210	1-7/8	**069814**	FC-IP-114R	**069846**	FC-IP-114RE	**069878**	FC-IP-114L	**069910**	FC-IP-114LE
	1-15/16	**069815**	FC-IP-115R	**069847**	FC-IP-115RE	**069879**	FC-IP-115L	**069911**	FC-IP-115LE
	2	**069816**	FC-IP-200R	**069848**	FC-IP-200RE	**069880**	FC-IP-200L	**069912**	FC-IP-200LE
22211	2-3/16	**069817**	FC-IP-203R	**069849**	FC-IP-203RE	**069881**	FC-IP-203L	**069913**	FC-IP-203LE
	2-1/4	**069818**	FC-IP-204R	**069850**	FC-IP-204RE	**069882**	FC-IP-204L	**069914**	FC-IP-204LE
22213	2-3/8	**069819**	FC-IP-206R	**069851**	FC-IP-206RE	**069883**	FC-IP-206L	**069915**	FC-IP-206LE
	2-7/16	**069820**	FC-IP-207R	**069852**	FC-IP-207RE	**069884**	FC-IP-207L	**069916**	FC-IP-207LE
	2-1/2	**069821**	FC-IP-208R	**069853**	FC-IP-208RE	**069885**	FC-IP-208L	**069917**	FC-IP-208LE

Metric shaft sizes available upon request

Shaft Size	A	B	C	D	DD	E	F Bolt Dia.	G	H	K*	L	M	N	P	Q	X Total Exp	Y	Z
1-1/8 1-3/16 1-1/4 1-3/8 1-7/16 1-1/2	2.63	5.25	1.84	3.09	4.38	0.75	3/8	1.39	0.50	3. 625	2.72	3/8-16	2.61	1.23	1.22	3/16	0.02	1.80
1-5/8 1-11/16 1-3/4	2.81	6.13	1.91	3.63	5.13	0.88	7/16	1.61	0.50	4.250	3.00	7/16-14	2.86	1.20	1.27	1/4	0.02	2.08
1-7/8 1-15/16 2	2.86	6.38	2.00	3.80	5.38	0.88	7/16	1.59	0.56	4.500	3.28	7/16-14	2.86	1.27	1.27	1/4	0.02	2.30
2-3/16 2-1/4	3.03	7.13	2.19	4.25	6.00	1.00	1/2	1.67	0.56	5.000	3.50	1/2-13	3.08	1.38	1.42	1/4	0.03	2.60
2-3/8 2-7/16 2-1/2	3.42	7.63	2.50	4.59	6.50	1.00	1/2	1.88	0.63	5.500	3.88	1/2-13	3.44	1.55	1.56	1/4	0.03	2.95

* = +0.000, -0.002"

FEATURES/BENEFITS PAGE B14-2	SPECIFICATIONS PAGE B14-5	HOW TO ORDER/NOMENCLATUE PAGE B14-8	SELECTION PAGE B14-14

DIMENSIONS

IMPERIAL - IP Piloted Flange
2-11/16 THRU 5 INCH

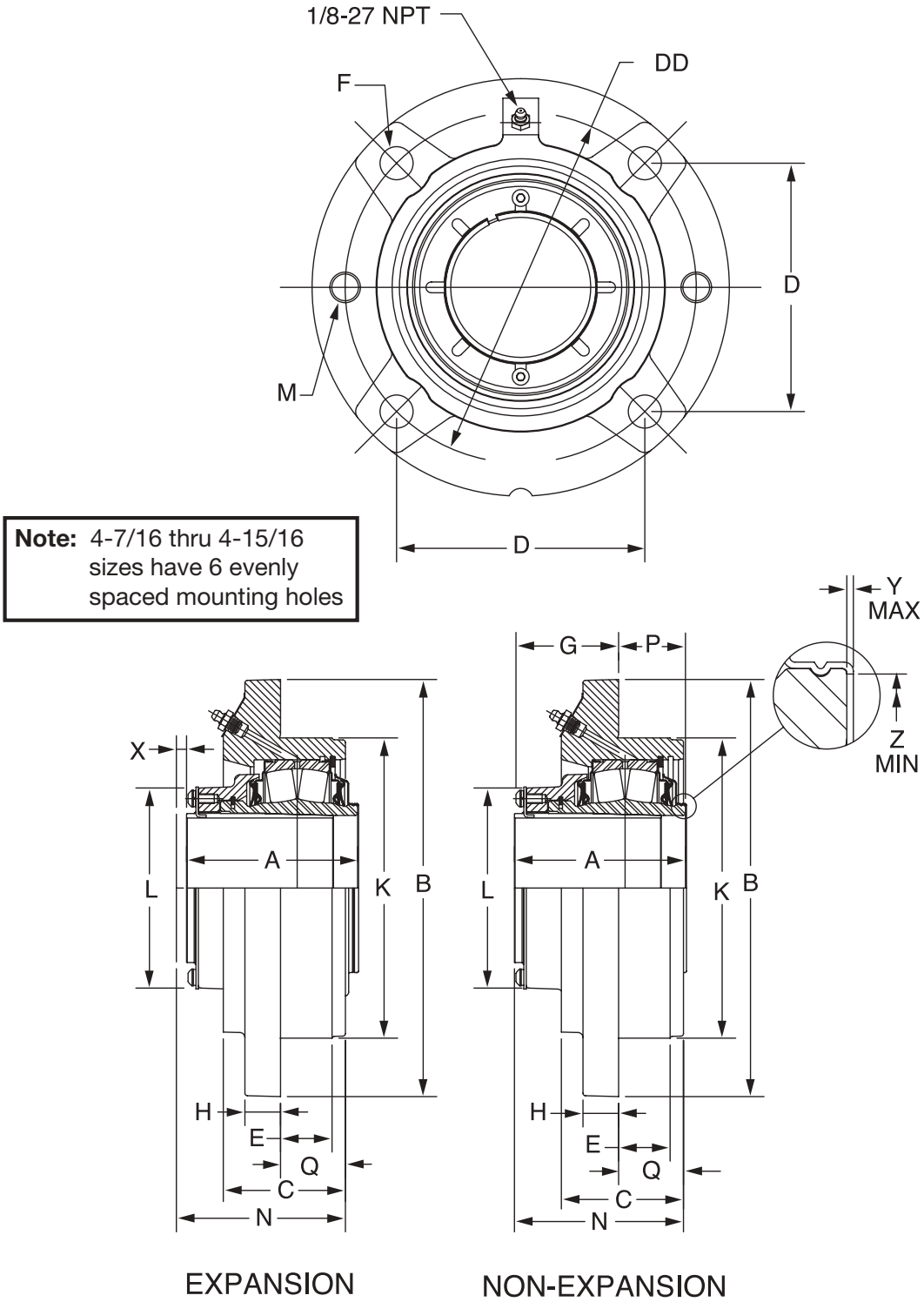

NOTE: See page B14-78 for 1-1/8 thru 2-1/2 inch



IMPERIAL - IP Piloted Flange
2-11/16 THRU 5 INCH

Bearing	Shaft Size Inch	TRIDENT Seal				Labyrinth Seal			
		Non-Expansion		Expansion		Non-Expansion		Expansion	
		Part No.	Part Name	Part No.	Part Name	Part No.	Part Name	Part No.	Part Name
22215	2-11/16	**069822**	FC-IP-211R	**069854**	FC-IP-211RE	**069886**	FC-IP-211L	**069918**	FC-IP-211LE
	2-3/4	**069823**	FC-IP-212R	**069855**	FC-IP-212RE	**069887**	FC-IP-212L	**069919**	FC-IP-212LE
	2-15/16	**069824**	FC-IP-215R	**069856**	FC-IP-215RE	**069888**	FC-IP-215L	**069920**	FC-IP-215LE
	3	**069825**	FC-IP-300R	**069857**	FC-IP-300RE	**069889**	FC-IP-300L	**069921**	FC-IP-300LE
22218	3-3/16	**069826**	FC-IP-303R	**069858**	FC-IP-303RE	**069890**	FC-IP-303L	**069922**	FC-IP-303LE
	3-1/4	**069827**	FC-IP-304R	**069859**	FC-IP-304RE	**069891**	FC-IP-304L	**069923**	FC-IP-304LE
	3-7/16	**069828**	FC-IP-307R	**069860**	FC-IP-307RE	**069892**	FC-IP-307L	**069924**	FC-IP-307LE
	3-1/2	**069829**	FC-IP-308R	**069861**	FC-IP-308RE	**069893**	FC-IP-308L	**069925**	FC-IP-308LE
22220	3-11/16	**069830**	FC-IP-311R	**069862**	FC-IP-311RE	**069894**	FC-IP-311L	**069926**	FC-IP-311LE
	3-15/16	**069831**	FC-IP-315R	**069863**	FC-IP-315RE	**069895**	FC-IP-315L	**069927**	FC-IP-315LE
	4	**069832**	FC-IP-400R	**069864**	FC-IP-400RE	**069896**	FC-IP-400L	**069928**	FC-IP-400LE
22222	4-7/16	**069833**	FC-IP-407R	**069865**	FC-IP-407RE	**069897**	FC-IP-407L	**069929**	FC-IP-407LE
	4-1/2	**069834**	FC-IP-408R	**069866**	FC-IP-408RE	**069898**	FC-IP-408L	**069930**	FC-IP-408LE
22226	4-15/16	**069835**	FC-IP-415R	**069867**	FC-IP-415RE	**069899**	FC-IP-415L	**069931**	FC-IP-415LE
	5	**069836**	FC-IP-500R	**069868**	FC-IP-500RE	**069900**	FC-IP-500L	**069932**	FC-IP-500LE

Metric shafe sizes available upon request

Shaft Size	A	B	C	D	DD	E	F Bolt Dia.	G	H	K*	L	M	N	P	Q	X Total Exp	Y	Z
2-11/16 2-3/4 2-15/16 3	3.50	8.75	2.63	5.30	7.50	1.25	5/8	1.94	0.75	6.375	4.28	5/8-11	3.56	1.56	1.63	1/4	0.03	3.47
3-3/16 3-1/4 3-7/16 3-1/2	4.17	10.25	3.00	6.09	8.63	1.27	3/4	2.53	0.94	7.375	5.00	3/4-10	4.06	1.64	1.52	1/4	0.03	4.05
3-11/16 3-15/16 4	4.70	10.88	3.50	6.63	9.38	1.47	3/4	2.89	1.13	8.125	5.56	3/4-10	4.39	1.81	1.91	5/16	0.03	4.50
4-7/16 4-1/2	5.23	13.50	4.00	5.88	11.75	1.45	3/4**	3.56	1.00	10.250	6.44	3/4-10	5.55	1.67	1.98	3/8	0.04	5.00
4-15/16 5	5.98	14.75	4.38	6.38	12.75	1.70	7/8**	3.86	1.25	11.000	7.63	3/4-10	6.28	2.13	2.42	3/8	0.04	5.84

* +0.000", -0.002"

** 6 equally spaced mounting holes

FEATURES/BENEFITS PAGE B14-2	SPECIFICATIONS PAGE B14-5	HOW TO ORDER/NOMENCLATUE PAGE B14-8	SELECTION PAGE B14-14

DIMENSIONS

IMPERIAL - IP Piloted Flange with Type E Dimensions
1-3/8 THRU 2-1/2 INCH

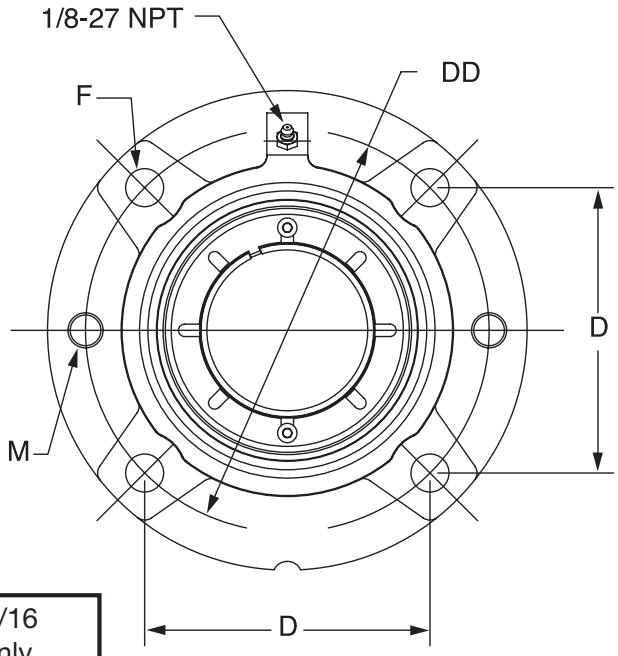

Note: 4-7/16 thru 4-15/16 sizes have 6 evenly spaced mounting holes

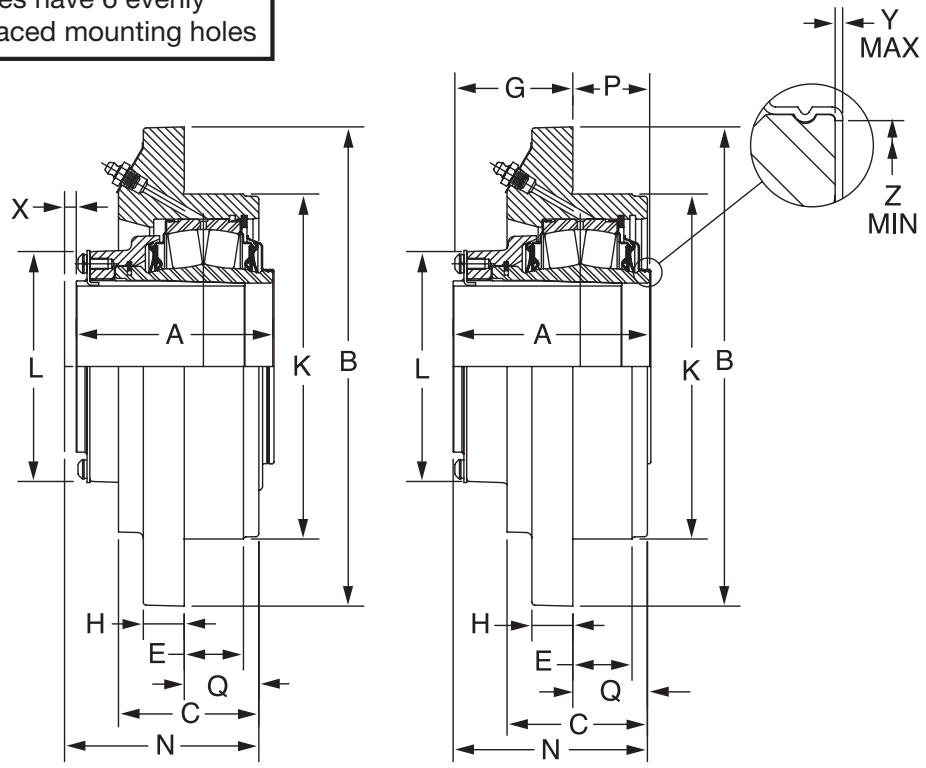

EXPANSION NON-EXPANSION



IMPERIAL - IP Piloted Flange with Type E Dimensions
1-3/8 THRU 2-1/2 INCH

Bearing Series	Shaft Size*	TRIDENT Seal				Labyrinth Seal			
		Non-Expansion		Expansion		Non-Expansion		Expansion	
		Part No.	Part Name	Part No.	Part Name	Part No.	Part Name	Part No.	Part Name
22208	1-3/8	**069808**	FC-IP-106R	**069840**	FC-IP-106RE	**069872**	FC-IP-106L	**069904**	FC-IP-106LE
	1-7/16	**069809**	FC-IP-107R	**069841**	FC-IP-107RE	**069873**	FC-IP-107L	**069905**	FC-IP-107LE
22209	1-1/2	**071576**	EFC-IP-108R	**071579**	EFC-IP-108RE	**071582**	EFC-IP-108L	**071585**	EFC-IP-108LE
	1-5/8	**069811**	FC-IP-110R	**069843**	FC-IP-110RE	**069875**	FC-IP-110L	**069907**	EC-IP-110LE
	1-11/16	**069812**	FC-IP-111R	**069844**	FC-IP-111RE	**069876**	FC-IP-111L	**069908**	EC-IP-111LE
22210	1-3/4	**071577**	EFC-IP-112R	**071580**	EFC-IP-112RE	**071583**	EFC-IP-112L	**071586**	EFC-IP-112LE
	1-7/8	**069814**	FC-IP-114R	**069846**	FC-IP-114RE	**069878**	FC-IP-114L	**069910**	FC-IP-114LE
	1-15/16	**069815**	FC-IP-115R	**069847**	FC-IP-115RE	**069879**	FC-IP-115L	**069911**	FC-IP-115LE
	2	**069816**	FC-IP-200R	**069848**	FC-IP-200RE	**069880**	FC-IP-200L	**069912**	FC-IP-200LE
22211	2-3/16	**069817**	FC-IP-203R	**069849**	FC-IP-203RE	**069881**	FC-IP-203L	**069913**	FC-IP-203LE
22213	2-1/4	**071578**	EFC-IP-204R	**071581**	EFC-IP-204RE	**071584**	EFC-IP-204L	**071587**	EFC-IP-204LE
	2-7/16	**069820**	FC-IP-207R	**069852**	FC-IP-207RE	**069884**	FC-IP-207L	**069916**	FC-IP-207LE
	2-1/2	**069821**	FC-IP-208R	**069853**	FC-IP-208RE	**069885**	FC-IP-208L	**069917**	FC-IP-208LE

*Consult Dodge For Sizes Not Listed

Shaft Size	A	B #	C #	D	DD	E #	F Bolt Dia.	G	H #	K ##	L	M	N	P	Q #	X Total Exp.	Y	Z
1-3/8 1-7/16	2.63	5.25	1.84	3.09	4.38	0.75	3/8	1.39	0.50	3.625	2.72	3/8-16	2.61	1.23	1.22	3/16	0.02	1.80
1-1/2 1-5/8 1-11/16	2.81	6.13	1.91	3.63	5.13	0.88	7/16	1.61	0.50	4.250	3.00	7/16-14	2.86	1.20	1.26	1/4	0.02	2.08
1-3/4 1-7/8 1-15/16 2	2.86	6.38	2.00	3.80	5.38	0.88	7/16	1.59	0.56	4.500	3.28	7/16-14	2.86	1.26	1.26	1/4	0.02	2.30
2-3/16	3.03	7.13	2.19	4.25	6.00	1.00	1/2	1.66	0.56	5.000	3.50	1/2-13	3.08	1.38	1.42	1/4	0.03	2.59
2-1/4 2-7/16 2-1/2	3.42	7.63	2.50	4.59	6.50	1.00	1/2	1.88	0.63	5.500	3.88	1/2-13	3.44	1.55	1.56	1/4	0.03	2.94

- +0.000 -0.002

- Reference Dimension Only

Note(S): "P" And "G" Dimensions Are For Non-Expansion Only

"A" And "P" Dimensions Do Not Include "Y" Dimension

FEATURES/BENEFITS PAGE B14-2	SPECIFICATIONS PAGE B14-5	HOW TO ORDER/NOMENCLATUE PAGE B14-8	SELECTION PAGE B14-14

DIMENSIONS

IMPERIAL - IP Piloted Flange with Type E Dimension
2-11/16 THRU 5 INCH

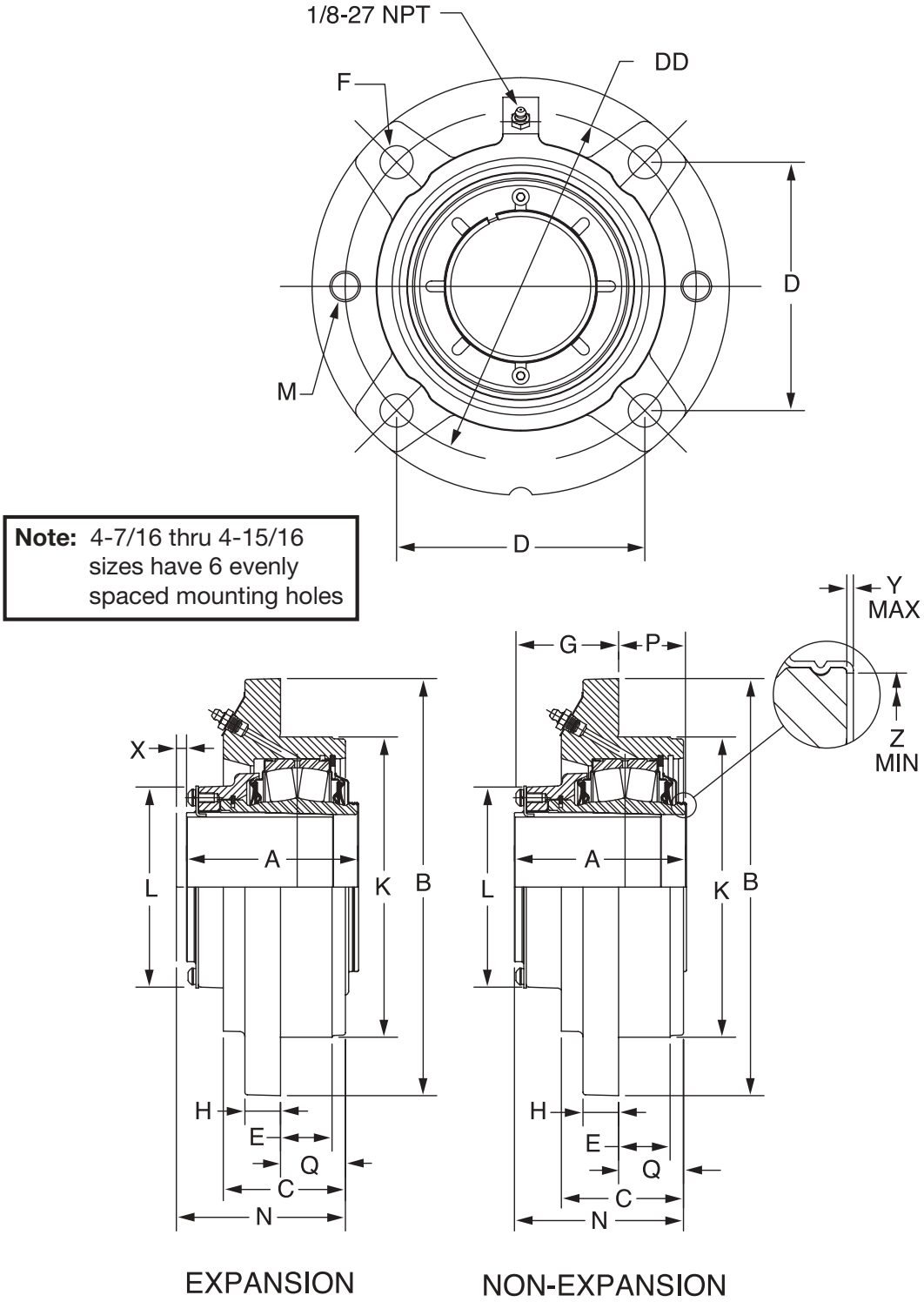



IMPERIAL - IP Piloted Flange with Type E Dimension
2-11/16 THRU 5 INCH

Bearing Series	Shaft Size*	TRIDENT Seal				Labyrinth Seal			
		Non-Expansion		Expansion		Non-Expansion		Expansion	
		Part No.	Part Name	Part No.	Part Name	Part No.	Part Name	Part No.	Part Name
22215	2-11/16	**069822**	FC-IP-211R	**069854**	FC-IP-211RE	**069886**	FC-IP-211L	**069918**	FC-IP-211LE
	2-3/4	**069823**	FC-IP-212R	**069855**	FC-IP-212RE	**069887**	FC-IP-212L	**069919**	FC-IP-212LE
	2-15/16	**069824**	FC-IP-215R	**069856**	FC-IP-215RE	**069888**	FC-IP-215L	**069920**	FC-IP-215LE
	3	**069825**	FC-IP-300R	**069857**	FC-IP-300RE	**069889**	FC-IP-300L	**069921**	FC-IP-300LE
22218	3-3/16	**069826**	FC-IP-303R	**069858**	FC-IP-303RE	**069890**	FC-IP-303L	**069922**	FC-IP-303LE
	3-1/4	**069827**	FC-IP-304R	**069859**	FC-IP-304RE	**069891**	FC-IP-304L	**069923**	FC-IP-304LE
	3-7/16	**069828**	FC-IP-307R	**069860**	FC-IP-307RE	**069892**	FC-IP-307L	**069924**	FC-IP-307LE
	3-1/2	**069829**	FC-IP-308R	**069861**	FC-IP-308RE	**069893**	FC-IP-308L	**069925**	FC-IP-308LE
22220	3-15/16	**069831**	FC-IP-315R	**069863**	FC-IP-315RE	**069895**	FC-IP-315L	**069927**	FC-IP-315LE
	4	**069832**	FC-IP-400R	**069864**	FC-IP-400RE	**069896**	FC-IP-400L	**069928**	FC-IP-400LE
22222	4-7/16	**071272**	EFC-IP-407R	**071276**	EFC-IP-407RE	**071280**	EFC-IP-407L	**071284**	EFC-IP-407LE
	4-1/2	**071273**	EFC-IP-408R	**071277**	EFC-IP-408RE	**071281**	EFC-IP-408L	**071285**	EFC-IP-408LE
22226	4-15/16	**071274**	EFC-IP-415R	**071278**	EFC-IP-415RE	**071282**	EFC-IP-415L	**071286**	EFC-IP-415LE
	5	**071275**	EFC-IP-500R	**071279**	EFC-IP-500RE	**071283**	EFC-IP-500L	**071287**	EFC-IP-500LE

*Consult Dodge For Sizes Not Listed

Shaft Size	A	B #	C #	D	DD	E #	F Bolt Dia.	G	H #	K ##	L	M	N	P	Q #	X Total Exp.	Y	Z
2-11/16 2-3/4 2-15/16 3	3.50	8.75	2.63	5.30	7.50	1.25	5/8	1.94	0.75	6.375	4.28	5/8-11	3.56	1.56	1.63	1/4	0.03	3.47
3-3/16 3-1/4 3-7/16 3-1/2	4.17	10.25	3.00	6.09	8.63	1.26	3/4	2.53	0.94	7.375	5.00	3/4-10	4.06	1.64	1.52	1/4	0.03	4.05
3-15/16 4	4.70	10.88	3.50	6.63	9.38	1.47	3/4	2.89	1.13	8.125	5.56	3/4-10	4.78	1.81	1.91	5/16	0.03	4.50
4-7/16 4-1/2	5.23	13.50	4.58	5.88	11.75	1.45	3/4 **	3.03	0.94	10.250	6.44	3/4-10	5.66	2.20	2.63	3/8	0.04	5.00
4-15/16 5	5.98	14.75	4.88	6.38	12.75	1.70	7/8 **	3.40	1.25	11.000	7.63	3/4-10	6.41	2.59	3.01	3/8	0.04	5.84

- +0.000 -0.002

- Reference Dimension Only

Note(S): "P" And "G" Dimensions Are For Non-Expansion Only

"A" And "P" Dimensions Do Not Include "Y" Dimension

** 4-7/16 Thru 5" Have (6) Equally Spaced Mounting Holes

FEATURES/BENEFITS PAGE B14-2	SPECIFICATIONS PAGE B14-5	HOW TO ORDER/NOMENCLATUE PAGE B14-8	SELECTION PAGE B14-14

DIMENSIONS

Steel IMPERIAL-HD Piloted Flange

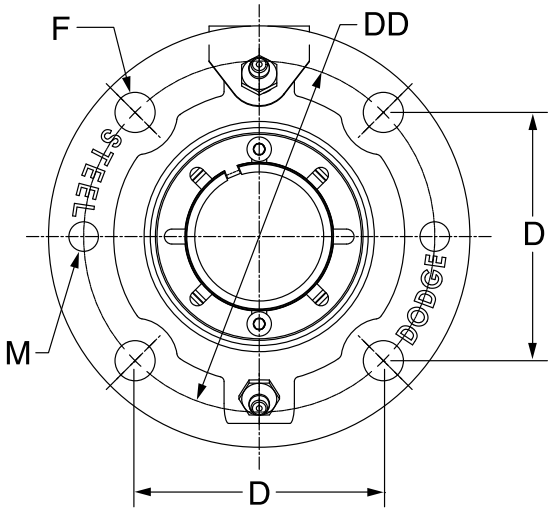

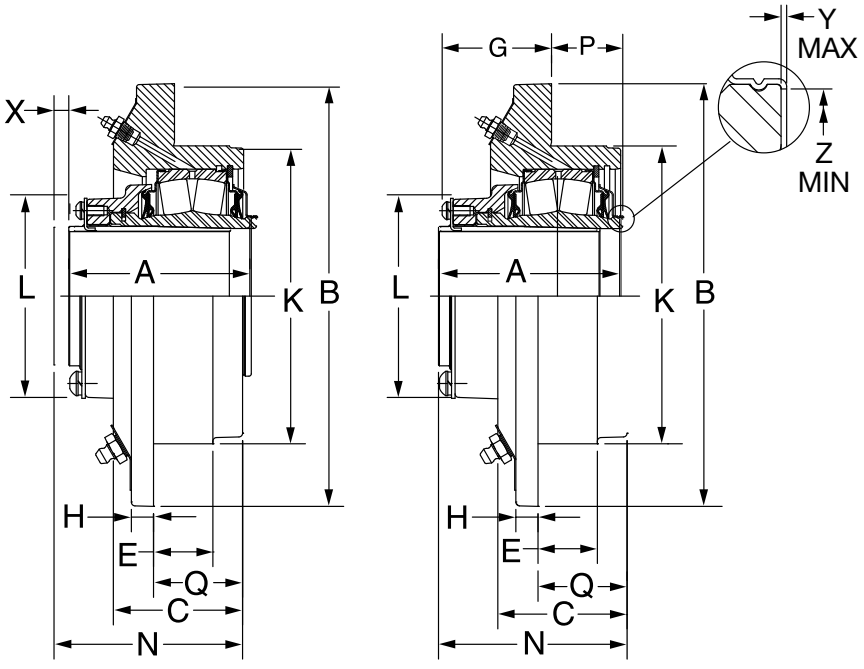

EXPANSION NON-EXPANSION

DIMENSIONS



Steel IMPERIAL-HD Piloted Flange

Shaft Size	Dodge Non-Expansion		Dodge Expansion	
	Dodge Part No.	Description	Dodge Part No.	Description
1-1/8	**072276**	SFC-IP-102R	**072307**	SFC-IP-102RE
1-3/16	**072277**	SFC-IP-103R	**072308**	SFC-IP-103RE
1-1/4	**072278**	SFC-IP-104R	**072309**	SFC-IP-104RE
1-3/8	**072279**	SFC-IP-106R	**072310**	SFC-IP-106RE
1-7/16	**072280**	SFC-IP-107R	**072311**	SFC-IP-107RE
1-1/2	**072281**	SFC-IP-108R	**072312**	SFC-IP-108RE
1-5/8	**072282**	SFC-IP-110R	**072313**	SFC-IP-110RE
1-11/16	**072283**	SFC-IP-111R	**072314**	SFC-IP-111RE
1-3/4	**072284**	SFC-IP-112R	**072315**	SFC-IP-112RE
1-7/8	**072285**	SFC-IP-114R	**072316**	SFC-IP-114RE
1-15/16	**072286**	SFC-IP-115R	**072317**	SFC-IP-115RE
2	**072287**	SFC-IP-200R	**072318**	SFC-IP-200RE
2-3/16	**072288**	SFC-IP-203R	**072319**	SFC-IP-203RE
2-1/4	**072289**	SFC-IP-204R	**072320**	SFC-IP-204RE
2-7/16	**072290**	SFC-IP-207R	**072321**	SFC-IP-207RE
2-1/2	**072291**	SFC-IP-208R	**072322**	SFC-IP-208RE
2-11/16	**072292**	SFC-IP-211R	**072323**	SFC-IP-211RE
2-3/4	**072293**	SFC-IP-212R	**072324**	SFC-IP-212RE
2-15/16	**072294**	SFC-IP-215R	**072325**	SFC-IP-215RE
3	**072295**	SFC-IP-300R	**072326**	SFC-IP-300RE
3-3/16	**072296**	SFC-IP-303R	**072327**	SFC-IP-303RE
3-1/4	**072297**	SFC-IP-304R	**072328**	SFC-IP-304RE
3-7/16	**072298**	SFC-IP-307R	**072329**	SFC-IP-307RE
3-1/2	**072299**	SFC-IP-308R	**072330**	SFC-IP-308RE
3-11/16	**072300**	SFC-IP-311R	**072331**	SFC-IP-311RE
3-15/16	**072301**	SFC-IP-315R	**072332**	SFC-IP-315RE
4	**072302**	SFC-IP-400R	**072333**	SFC-IP-400RE
4-7/16	**072303**	SFC-IP-407R	**072334**	SFC-IP-407RE
4-1/2	**072304**	SFC-IP-408R	**072335**	SFC-IP-408RE
4-15/16	**072305**	SFC-IP-415R	**072336**	SFC-IP-415RE
5	**072306**	SFC-IP-500R	**072337**	SFC-IP-500RE

DIMENSIONS

Steel IMPERIAL-HD Piloted Flange

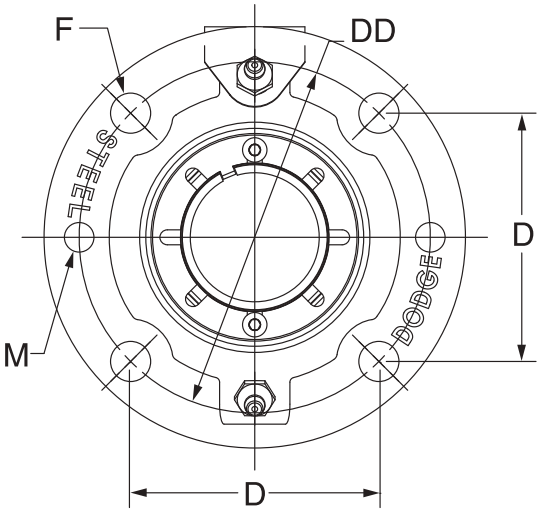

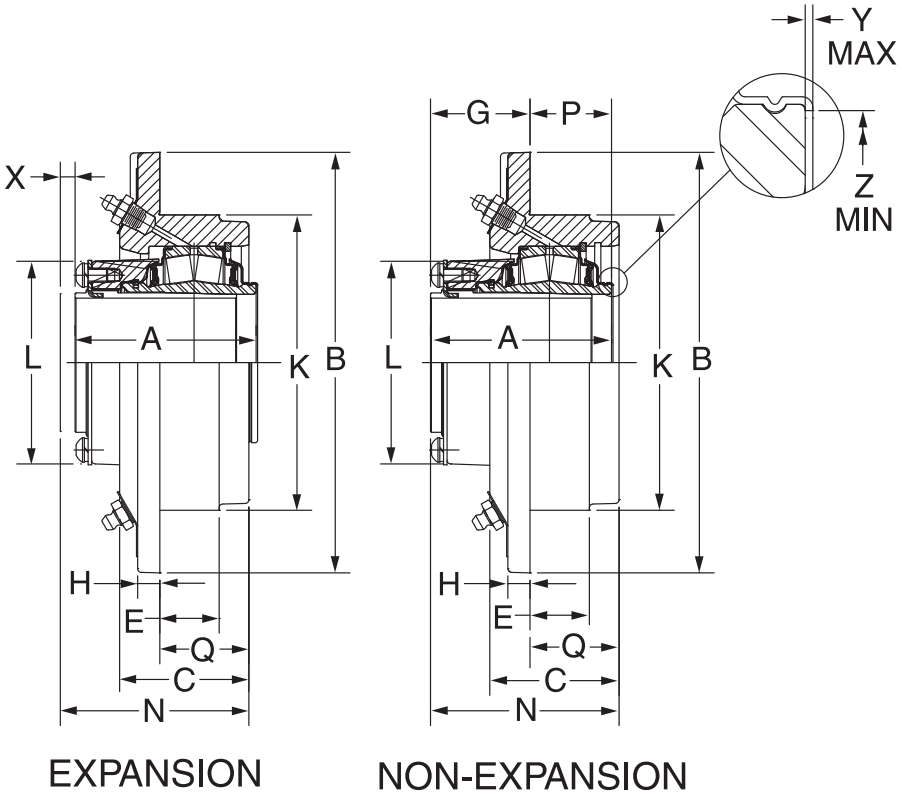

DIMENSIONS

Steel IMPERIAL-HD Piloted Flange



Shaft Size	A	B	C	D	DD	E	F Bolt Dia	G	H	K *	L	M	N	P	Q	X Total Exp	Y	Z
1-1/8 1-3/16 1-1/4 1-3/8 1-7/16 1-1/2	2.63	5.25	1.94	3.09	4.38	_	7/16	1.61	.50	3.625	2.72	7/16-14	2.78	1.01	1.17	3/16	0.02	1.80
1-5/8 1-11/16 1-3/4	2.81	6.13	2.19	3.63	5.13	1.33	7/16	1.44	.31	4.250	3.00	7/16-14	3.05	1.36	1.61	1/4	0.02	2.08
1-7/8 1-15/16 2	2.86	6.38	2.15	3.80	5.38	1.03	7/16	1.63	.50	4.500	3.28	7/16-14	3.05	1.23	1.42	1/4	0.02	2.30
2-3/16 2-1/4	3.03	7.13	2.42	4.25	6.00	1.02	1/2	1.80	.56	5.000	3.50	1/2-13	3.34	1.21	1.55	1/4	0.03	2.59
2-3/8 2-7/16 2-1/2	3.43	7.63	2.66	4.60	6.50	1.25	1/2	1.86	0.50	5.500	3.80	1/2-13	3.61	1.57	1.75	1/4	0.03	2.94
2-11/16 2-3/4 2-15/16 3	3.50	8.75	2.83	5.30	7.50	1.44	5/8	1.89	0.63	6.375	4.20	5/8-11	3.77	1.60	1.88	1/4	0.03	3.47
3-3/16 3-1/4 3-7/16 3-1/2	4.17	10.25	3.31	6.10	8.63	1.34	3/4	2.46	0.88	7.375	5.00	3/4-10	4.34	1.70	1.88	1/4	0.03	4.05
3-11/16 3-15/16 4	4.70	10.88	3.73	6.63	9.375	1.85	3/4	2.58	1.00	8.125	5.44	3/4-10	4.83	2.14	2.25	3/16	0.03	4.50
4-7/16 4-1/2	5.23	13.50	4.31	5.86	11.75	1.90	3/4**	3.01	1.00	10.250	6.34	3/4-10	5.70	2.72	2.70	3/8	0.04	5.00
4-15/16 5	5.98	14.75	4.64	6.38	12.75	2.06	7/8**	2.98	1.03	11.000	7.54	7/8-9	6.08	3.00	3.10	3/8	0.04	5.84

"P" & "G" Are For Non-Expansion Only
"A" & "P" Dimensions Do Not Include "Y" Dimension
* +0.000 / -0.002
4-7/16 Thru 5" have 6 equally spaced mounting holes

FEATURES/BENEFITS PAGE B14-2	SPECIFICATIONS PAGE B14-5	HOW TO ORDER/NOMENCLATUE PAGE B14-8	SELECTION PAGE B14-14

DIMENSIONS

Steel IMPERIAL-HD Narrow Piloted Flange

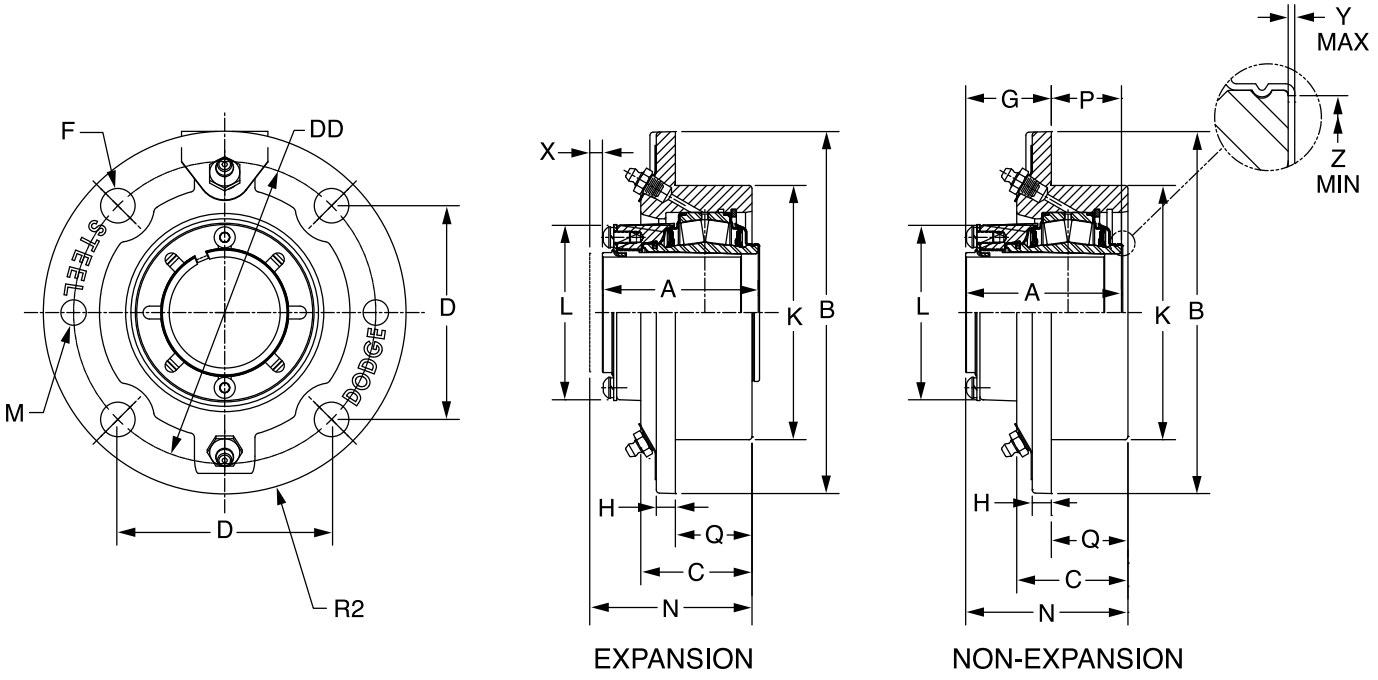

Shaft Size	Dodge Non-Expansion		Dodge Expansion	
	Dodge Part No.	Description	Dodge Part No.	Description
1-7/16	**072338**	SFCN-IP-107R	**072362**	SFCN-IP-107RE
1-1/2	**072339**	SFCN-IP-108R	**072363**	SFCN-IP-108RE
1-11/16	**072340**	SFCN-IP-111R	**072364**	SFCN-IP-111RE
1-3/4	**072341**	SFCN-IP-112R	**072365**	SFCN-IP-112RE
1-15/16	**072342**	SFCN-IP-115R	**072366**	SFCN-IP-115RE
2	**072343**	SFCN-IP-200R	**072367**	SFCN-IP-200RE
2-3/16	**072344**	SFCN-IP-203R	**072368**	SFCN-IP-203RE
2-1/4	**072345**	SFCN-IP-204R	**072369**	SFCN-IP-204RE
2-7/16	**072346**	SFCN-IP-207R	**072370**	SFCN-IP-207RE
2-1/2	**072347**	SFCN-IP-208R	**072371**	SFCN-IP-208RE
2-11/16	**072348**	SFCN-IP-211R	**072372**	SFCN-IP-211RE
2-3/4	**072349**	SFCN-IP-212R	**072373**	SFCN-IP-212RE
2-15/16	**072350**	SFCN-IP-215R	**072374**	SFCN-IP-215RE
3	**072351**	SFCN-IP-300R	**072375**	SFCN-IP-300RE
3-3/16	**072352**	SFCN-IP-303R	**072376**	SFCN-IP-303RE
3-1/4	**072353**	SFCN-IP-304R	**072377**	SFCN-IP-304RE
3-7/16	**072354**	SFCN-IP-307R	**072378**	SFCN-IP-307RE
3-1/2	**072355**	SFCN-IP-308R	**072379**	SFCN-IP-308RE
3-11/16	**072356**	SFCN-IP-311R	**072380**	SFCN-IP-311RE
3-15/16	**072358**	SFCN-IP-315R	**072382**	SFCN-IP-315RE
4	**072359**	SFCN-IP-400R	**072383**	SFCN-IP-400RE
4-7/16	**072360**	SFCN-IP-407R	**072384**	SFCN-IP-407RE
4-1/2	**072361**	SFCN-IP-408R	**072385**	SFCN-IP-408RE

DIMENSIONS

Steel IMPERIAL-HD Narrow Piloted Flange



Shaft Size	A	B	C	D	DD	F Bolt Dta.	G	H	K*	L	M	N	P	Q	X Total Exp	Y	Z
1-7/16 1-1/2	2.63	5.25	1.93	3.09	4.38	7/16	1.84	0.50	3.625	2.72	7/16 - 14	2.78	0.79	.94	3/16	0.02	1.80
1-11/16 1-3/4	2.81	6.13	1.95	3.62	5.13	7/16	2.09	0.50	4.250	3.00	7/16 - 14	2.97	0.73	.88	1/4	0.02	2.08
1-15/16 2	2.86	6.38	2.10	3.80	5.38	7/16	1.99	0.63	4.500	3.28	7/16 - 14	3.05	0.88	1.06	1/4	0.02	2.30
2-3/16 2-1/4	3.03	7.30	2.22	4.24	6.00	1/2	2.06	0.58	5.000	3.50	1/2-13	3.19	1.00	1.13	1/4	0.02	2.59
2-7/16 2-1/2	3.42	7.63	2.35	4.60	6.50	1/2	2.40	0.70	5.500	3.80	1/2-13	3.53	1.04	1.13	1/4	0.03	2.94
2-11/16 2-3/4 2-15/16 3	3.50	8.75	2.47	5.30	7.50	5/8	2.35	0.81	6.375	4.20	5/8 - 11	3.60	1.15	1.25	1/4	0.03	3.47
3-3/16 3-1/4 3-7/16 3-1/2	4.17	10.34	2.79	6.10	8.63	3/4	2.88	1.00	7.375	5.00	3/4 - 10	4.19	1.30	1.31	1/4	0.03	4.05
3-11/16 3-15/16 4	4.70	10.88	3.61	6.63	9.38	3/4	2.82	1.01	8.125	5.45	3/4 - 10	4.95	1.88	2.13	5/16	0.03	4.50
4-7/16 4-1/2	5.23	13.50	3.80	5.89	11.75	3/4 **	3.51	1.01	10.250	6.34	3/4 - 10	5.41	1.74	1.90	3/8	0.04	5.00

'P' & 'G' ARE FOR NON-EXPANSION ONLY

'A' & 'P' DIMENSIONS DO NOT INCLUDE 'Y' DIMENSION

* +0.000 / -0.002

** 6 holes, equally spaced

FEATURES/BENEFITS PAGE B14-2	SPECIFICATIONS PAGE B14-5	HOW TO ORDER/NOMENCLATUE PAGE B14-8	SELECTION PAGE B14-14

DIMENSIONS

IMPERIAL - IP Wide Slot Take-Up
1-1/8 THRU 2-1/4 INCH

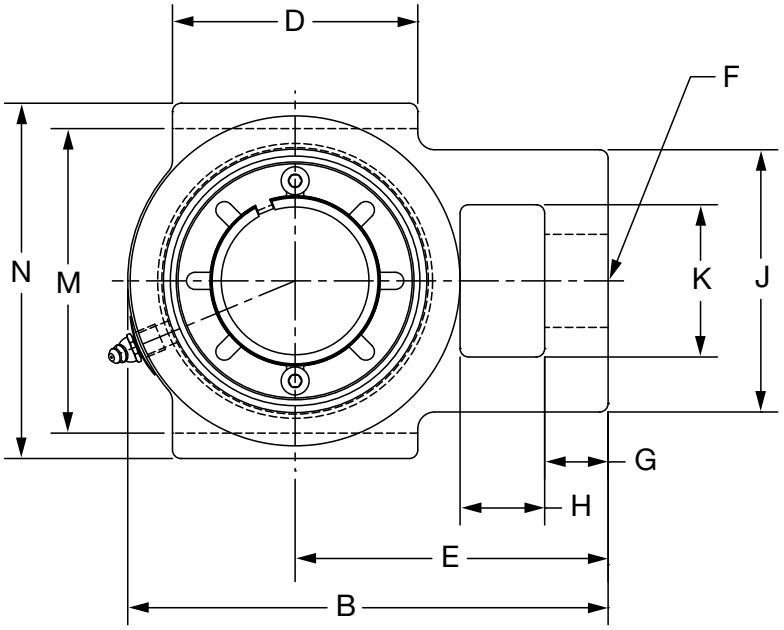

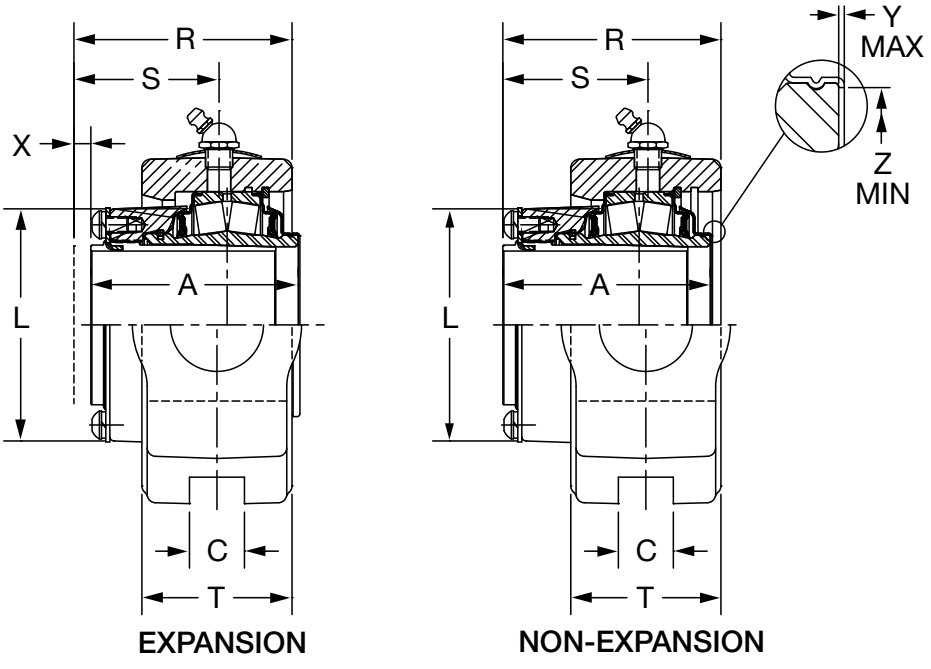

NOTE: See page B14-94 for 2-3/8" THRU 4"

FEATURES/BENEFITS PAGE B14-2	SPECIFICATIONS PAGE B14-5	HOW TO ORDER/NOMENCLATUE PAGE B14-8	SELECTION PAGE B14-14



IMPERIAL - IP Wide Slot Take-Up
1-1/8 THRU 2-1/4 INCH

Bearing	Shaft Size Inch	Take-Up Frame	TRIDENT Seal			
			Non-Expansion		Expansion	
			Part No.	Part Name	Part No.	Part Name
22208	1-1/8	CP-308	**069340**	WSTU-IP-102R	**069368**	WSTU-IP-102RE
	1-3/16		**069341**	WSTU-IP-103R	**069369**	WSTU-IP-103RE
	1-1/4		**069342**	WSTU-IP-104R	**069370**	WSTU-IP-104RE
	1-3/8		**069343**	WSTU-IP-106R	**069371**	WSTU-IP-106RE
	1-7/16		**069344**	WSTU-IP-107R	**069372**	WSTU-IP-107RE
	1-1/2		**069345**	WSTU-IP-108R	**069373**	WSTU-IP-108RE
22209	1-5/8	CP-400	**069346**	WSTU-IP-110R	**069374**	WSTU-IP-110RE
	1-11/16		**069347**	WSTU-IP-111R	**069375**	WSTU-IP-111RE
	1-3/4		**069348**	WSTU-IP-112R	**069376**	WSTU-IP-112RE
22210	1-7/8	CP-400	**069349**	WSTU-IP-114R	**069377**	WSTU-IP-114RE
	1-15/16		**069350**	WSTU-IP-115R	**069378**	WSTU-IP-115RE
	2		**069351**	WSTU-IP-200R	**069379**	WSTU-IP-200RE
22211	2-3/16	CP-408	**069352**	WSTU-IP-203R	**069380**	WSTU-IP-203RE
	2-1/4		**069353**	WSTU-IP-204R	**069381**	WSTU-IP-204RE

Metric shaft sizes available upon request

See Page B15-20 for CP. Take-Up Frame

Shaft Size	A	B	C	D	E	F	G	H	J	K	L	M	N	R	S	T	X Total Exp	Y	Z
1-1/8 1-3/16 1-1/4 1-3/8 1-7/16 1-1/2	2.63	5.06	0.53	2.75	3.19	7/8	0.69	0.63	2.44	1.44	2.72	3.50	4.13	2.83	1.73	2.06	3/16	0.02	1.80
1-5/8 1-11/16 1-3/4	2.81	5.94	0.69	3.13	3.81	1-1/8	0.94	0.75	3.31	1.94	3.00	4.00	4.75	2.97	1.98	2.03	1/4	0.02	2.08
1-7/8 1-15/16 2	2.86	6.19	0.69	3.63	3.94	1-1/8	0.94	0.75	3.31	1.94	3.28	4.00	4.75	2.94	2.00	2.00	1/4	0.02	2.30
2-3/16 2-1/4	3.03	7.06	0.81	3.63	4.63	1-3/8	0.94	1.25	3.88	2.25	3.50	4.50	5.25	3.19	2.11	2.22	1/4	0.03	2.60

DIMENSIONS

IMPERIAL - IP Wide Slot Take-Up
2-3/8 THRU 4 INCH

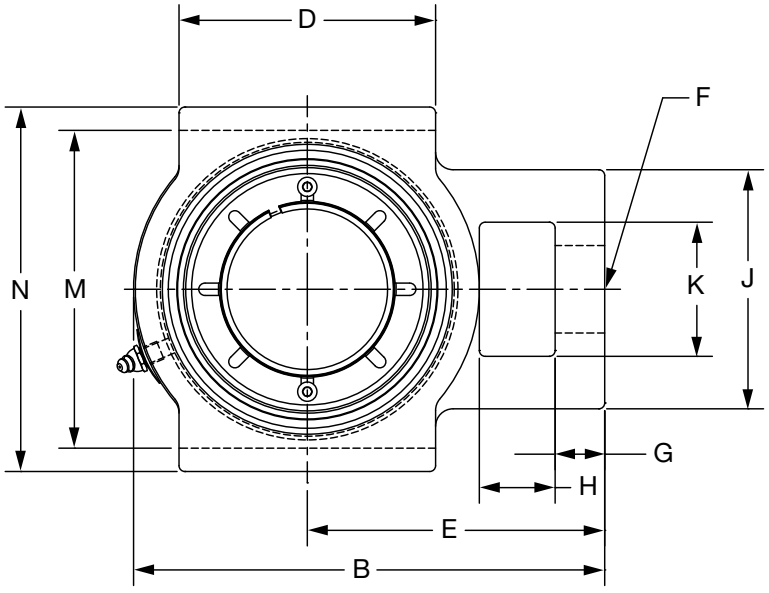

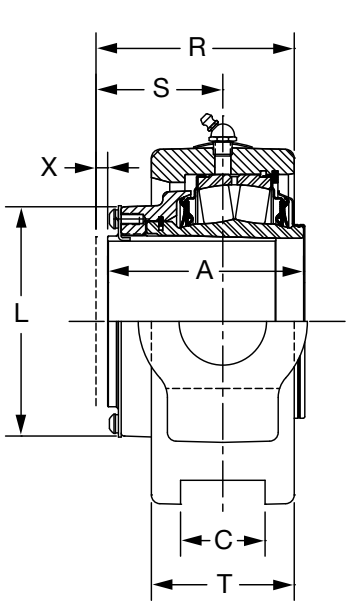

EXPANSION

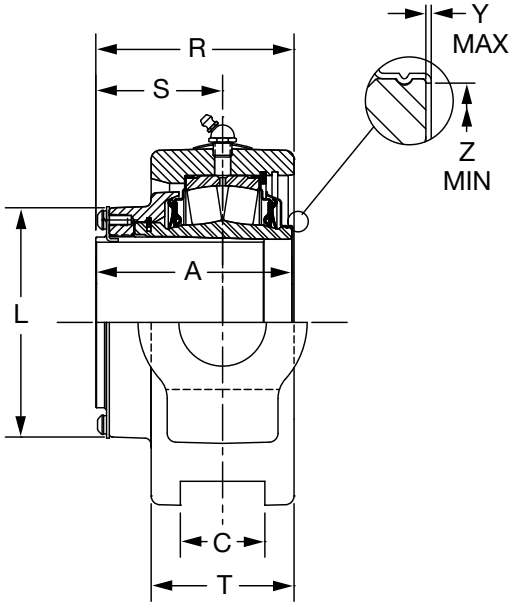

NON-EXPANSION

NOTE: See page B14-92 for 1-1/8 thru 2-1/4 inch



IMPERIAL - IP Wide Slot Take-Up
2-3/8 THRU 4 INCH

Bearing	Shaft Size nch	Take-Up Frame	TRIDENT Seal			
			Non-Expansion		Expansion	
			Part No.	Part Name	Part No.	Part Name
22213	2-3/8	CP-502	**069354**	WSTU-IP-206R	**069382**	WSTU-IP-206RE
	2-7/16		**069355**	WSTU-IP-207R	**069383**	WSTU-IP-207RE
	2-1/2		**069356**	WSTU-IP-208R	**069384**	WSTU-IP-208RE
22215	2 -11/16	CP-515	**069357**	WSTU-IP-211R	**069385**	WSTU-IP-211RE
	2-3/4		**069358**	WSTU-IP-212R	**069386**	WSTU-IP-212RE
	2-15/16		**069359**	WSTU-IP-215R	**069387**	WSTU-IP-215RE
	3		**069360**	WSTU-IP-300R	**069388**	WSTU-IP-300RE
22218	3-3/16	CP-613	**069361**	WSTU-IP-303R	**069389**	WSTU-IP-303RE
	3-1/4		**069362**	WSTU-IP-304R	**069390**	WSTU-IP-304RE
	3-7/16		**069363**	WSTU-IP-307R	**069391**	WSTU-IP-307RE
	3-1/2		**069364**	WSTU-IP-308R	**069392**	WSTU-IP-308RE
22220	3-11/16	CP-810	**069365**	WSTU-IP-311R	**069393**	WSTU-IP-311RE
	3-15/16		**069366**	WSTU-IP-315R	**069394**	WSTU-IP-315RE
	4		**069367**	WSTU-IP-400R	**069395**	WSTU-IP-400RE

Metric shaft sizes available upon request

See Page B15-20 for CP Take-U Frame

Shaft Size	A	B	C	D	E	F	G	H	J	K	L	M	N	R	S	T	X Total Exp	Y	Z
2-3/8 2-7/16 2-1/2	3.42	7.69	1.06	4.38	5.00	1-3/8	1.06	1.25	4.25	2.50	3.88	5.13	5.88	3.44	2.22	2.44	1/4	0.03	2.95
2 -11/16 2-3/4 2-15/16 3	3.50	8.88	1.81	4.50	5.75	1-5/8	1.13	1.50	4.88	2.75	4.28	5.94	6.69	3.67	2.28	2.69	1/4	0.03	3.47
3-3/16 3-1/4 3-7/16 3-1/2	4.16	10.06	1.81	5.50	6.38	1-7/8	1.06	1.63	5.13	2.88	5.00	6.81	7.81	4.22	2.69	3.06	1/4	0.03	4.05
3-11/16 3-15/16 4	4.70	12.56	2.06	7.00	8.38	2-1/8	2.06	2.13	6.00	3.38	5.56	8.63	9.44	4.80	3.05	3.44	5/16	0.03	4.50

FEATURES/BENEFITS PAGE B14-2	SPECIFICATIONS PAGE B14-5	HOW TO ORDER/NOMENCLATUE PAGE B14-8	SELECTION PAGE B14-14

DIMENSIONS

IMPERIAL Bearing Insert
1-1/8 THRU 2-1/4 INCH

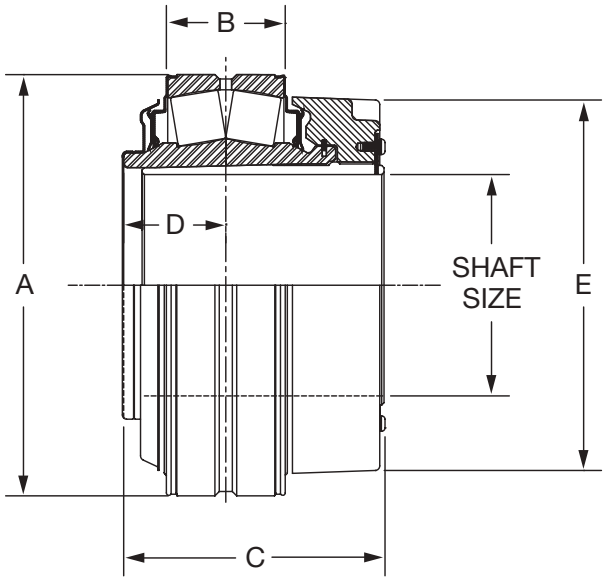

TRIDENT SEAL

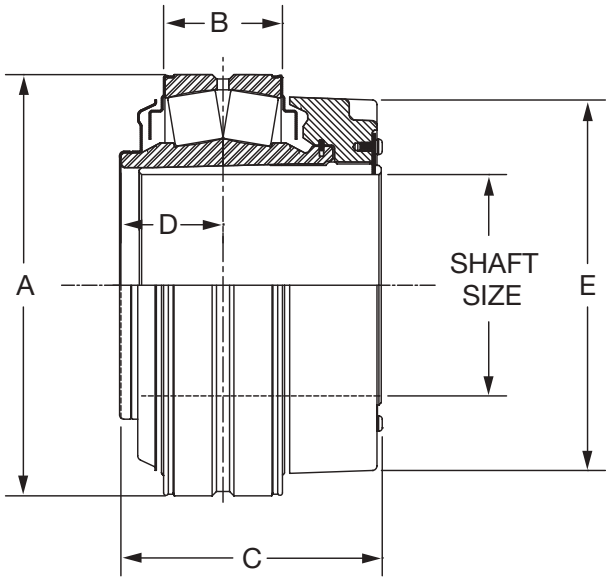

LABYRINTH SEAL

Bearing Series	Shaft Size Inch	TRIDENT Seal		Labyrinth Seal		A	B	C	D	E
		Part Number	Part Name	Part Number	Part Name					
22208	1-1/8	**070880**	INS-IP-102R	**070912**	INS-IP-102L	3.15	0.95	2.63	0.97	2.72
	1-3/16	**070881**	INS-IP-103R	**070913**	INS-IP-103L					
	1-1/4	**070882**	INS-IP-104R	**070914**	INS-IP-104L					
	1-3/8	**070883**	INS-IP-106R	**070915**	INS-IP-106L					
	1-7/16	**070884**	INS-IP-107R	**070916**	INS-IP-107L					
	1-1/2	**070885**	INS-IP-108R	**070917**	INS-IP-108L					
22209	1-1/2 *	**071590**	INS-IPE-108R	**071593**	INS-IPE-108L	3.35	0.95	2.81	0.95	3.00
	1-5/8	**070886**	INS-IP-110R	**070918**	INS-IP-110L					
	1-11/16	**070887**	INS-IP-111R	**070919**	INS-IP-111L					
	1-3/4	**070888**	INS-IP-112R	**070920**	INS-IP-112L					
22210	1-3/4 *	**071591**	INS-IPE-112R	**071594**	INS-IPE-112L	3.54	0.95	2.86	0.98	3.28
	1-7/8	**070889**	INS-IP-114R	**070921**	INS-IP-114L					
	1-15/16	**070890**	INS-IP-115R	**070922**	INS-IP-115L					
	2	**070891**	INS-IP-200R	**070923**	INS-IP-200L					
22211	2-3/16	**070892**	INS-IP-203R	**070924**	INS-IP-203L	3.94	1.05	3.03	1.05	3.50
	2-1/4	**070893**	INS-IP-204R	**070925**	INS-IP-204L					

* Inserts for IMPERIAL-Type E dimensioned housings only

Metric shaft sizes available upon request



IMPERIAL Bearing Insert
2-3/8 THRU 5 INCH

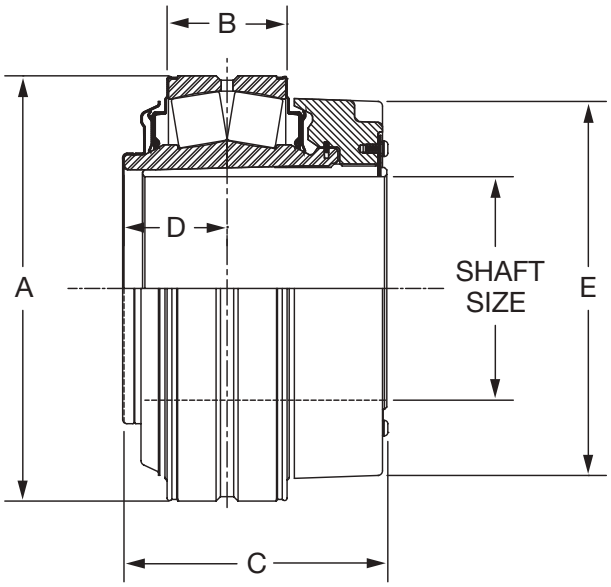

TRIDENT SEAL

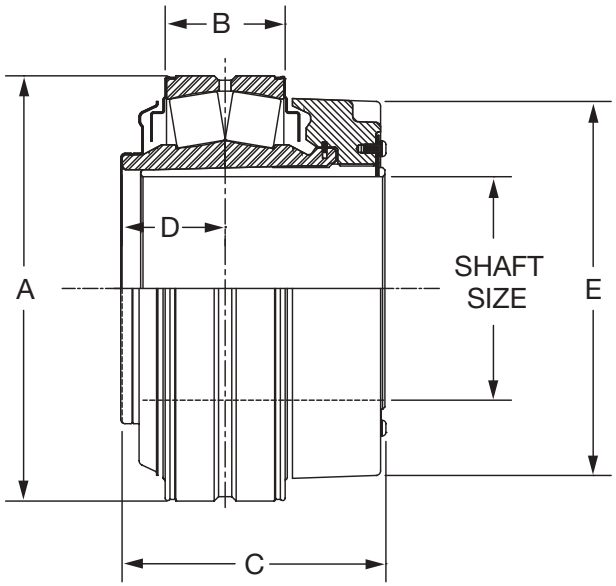

LABYRINTH SEAL

Bearing Series	Shaft Size	TRIDENT Seal		Labyrinth Seal		A	B	C	D	E
		Part Number	Part Name	Part Number	Part Name					
22213	2-1/4 *	**071592**	INS-IPE-204R	**071595**	INS-IPE-204L	4.72	1.28	3.42	1.21	3.88
	2-3/8	**070894**	INS-IP-206R	**070926**	INS-IP-206L					
	2-7/16	**070895**	INS-IP-207R	**070927**	INS-IP-207L					
	2-1/2	**070896**	INS-IP-208R	**070928**	INS-IP-208L					
22215	2-11/16	**070897**	INS-IP-211R	**070929**	INS-IP-211L	5.12	1.28	3.50	1.22	4.28
	2-3/4	**070898**	INS-IP-212R	**070930**	INS-IP-212L					
	2-15/16	**070899**	INS-IP-215R	**070931**	INS-IP-215L					
	3	**070900**	INS-IP-300R	**070932**	INS-IP-300L					
22218	3-3/16	**070901**	INS-IP-303R	**070933**	INS-IP-303L	6.30	1.63	4.17	1.48	5.00
	3-1/4	**070902**	INS-IP-304R	**070934**	INS-IP-304L					
	3-7/16	**070903**	INS-IP-307R	**070935**	INS-IP-307L					
	3-1/2	**070904**	INS-IP-308R	**070936**	INS-IP-308L					
22220	3-11/16	**070905**	INS-IP-311R	**070937**	INS-IP-311L	7.09	1.88	4.70	1.65	5.56
	3-15/16	**070906**	INS-IP-315R	**070938**	INS-IP-315L					
	4	**070907**	INS-IP-400R	**070939**	INS-IP-400L					
22222	4-7/16	**070908**	INS-IP-407R	**070940**	INS-IP-407L	7.87	2.16	5.23	1.94	6.44
	4-1/2	**070909**	INS-IP-408R	**070941**	INS-IP-408L					
22226	4-15/16	**070910**	INS-IP-415R	**070942**	INS-IP-415L	9.06	2.59	5.98	2.11	7.63
	5	**070911**	INS-IP-500R	**070943**	INS-IP-500L					

* Insert for IMPERIAL-Type E dimensioned housings only

Metric shaft sizes available upon request

FEATURES/BENEFITS PAGE B14-2	SPECIFICATIONS PAGE B14-5	HOW TO ORDER/NOMENCLATUE PAGE B14-8	SELECTION PAGE B14-14

DIMENSIONS

IMPERIAL Bearing Insert - For Large Bore ISAF Housings
5-7/16 THRU 7 INCH

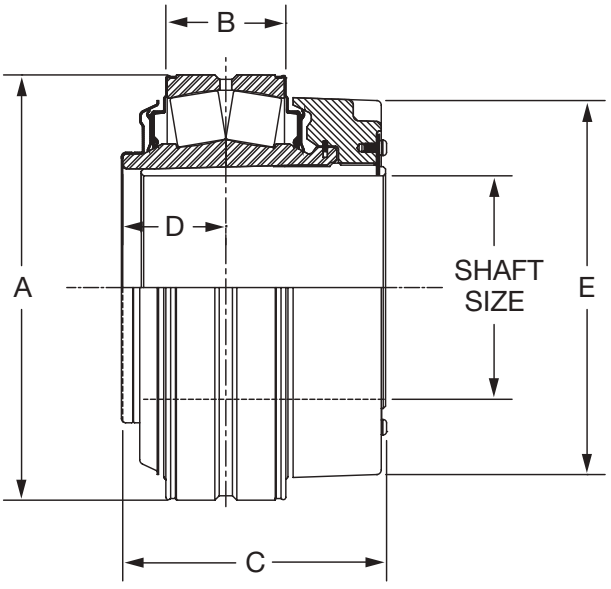

TRIDENT SEAL

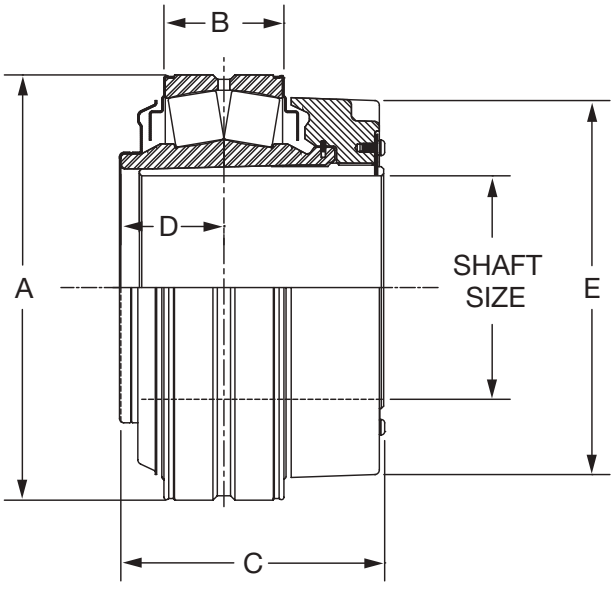

LABYRINTH SEAL

Bearing Series	Shaft Size	TRIDENT Seal		Labyrinth Seal	
		Part Number	Part Name	Part Number	Part Name
22228	5-7/16	**037925**	INS-IP-507R	**037933**	INS-IP-507L
	5-1/2	**037926**	INS-IP-508R	**037934**	INS-IP-508L
22232	5-15/16	**037927**	INS-IP-515R	**037935**	INS-IP-515L
	6	**037928**	INS-IP-600R	**037936**	INS-IP-600L
22236	6-7/16	**037929**	INS-IP-607R	**037937**	INS-IP-607L
	6-1/2	**037930**	INS-IP-608R	**037938**	INS-IP-608L
	6-15/16	**037931**	INS-IP-615R	**037939**	INS-IP-615L
	7	**037932**	INS-IP-700R	**037940**	INS-IP-700L

Metric shaft sizes available upon request

Shaft Size	A	B	C	D	E
5-7/16 5-1/2	9.84	2.75	6.17	2.34	8.75
5-15/16 6	11.42	3.22	7.08	2.77	10.25
6-7/16 6-1/2 6-15/16 7	12.60	3.47	7.39	2.86	11.41



HOW TO ORDER ISAF SMART STOCK SELECTIONS

STEP 1: The Housing Choices

- ISAF housings with embedded thermocouple probe and adapter plate.

Shaft Size	Series	Part Numbers Drilled Housing For Temperature or Vibration
207	515	**063765**
215	517	**063766**
307	520	**063767**
315	522	**063768**
407	526	**063769**
415	528	**063770**

STEP 2: Bearing Insert

- Select insert based on shaft size and seal choice. Locknut contains holes for prox target attachment.

Shaft Size	Contact Seal	Labyrinth Seals
207	**070895**	**070927**
215	**070899**	**070931**
307	**070903**	**070935**
315	**070906**	**070938**
407	**048385**	**048389**
415	**048386**	**048390**

STEP 3: The Sensor Choices

- For speed monitoring, select prox cover and AC prox kit (055940), AC for PLC monitoring.
- For temperature monitoring, select the Thermocouple Transmitter kit **055931**.
- For temperature and vibration monitoring, select **067576**.

Prox Covers		
Shaft Size	**Housing Series**	**Part Number**
207	515	**063771**
215	517	**063772**
307	520	**063773**
315	522	**063774**
407	526	**063775**
415	528	**063776**

ISAF Sensor Kits	Part Number
AC Prox	**055940**
Thermocouple Transmitter	**055931**
4-20mA Accelerometer and Thermocouple	**067576**

DIMENSIONS

IMPERIAL Spanner Wrench

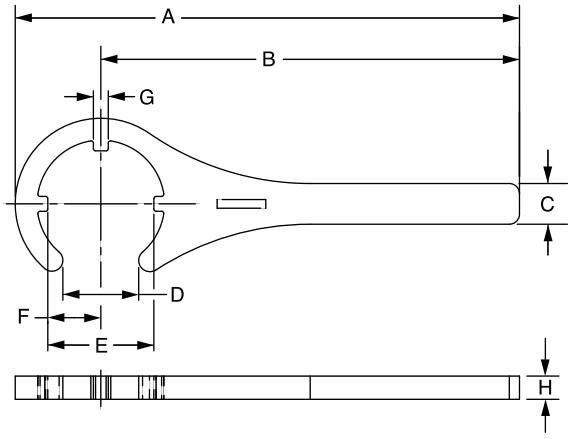

Shaft Size	Part Number	A	B	C	D	E	F	G	H
1-1/8 thru 1-1/2	**066629**	10.84	9.00	0.88	1.63	2.28	1.14	0.32	0.50
1-5/8 thru 1-3/4	**066630**	11.04	9.00	0.88	1.88	2.48	1.24	0.32	0.50
1-7/8 thru 2	**066631**	11.20	9.00	0.88	2.13	2.72	1.36	0.32	0.50
2-3/16 2-1/4	**066632**	12.38	10.00	0.88	2.38	2.98	1.49	0.44	0.50
2-3/8 thru 2-1/2	**066633**	12.63	10.00	1.31	2.63	3.40	1.70	0.44	0.50
2-11/16 thru 3	**066634**	16.90	14.00	1.31	3.13	3.80	1.90	0.44	0.50
3-3/16 thru 3-1/2	**066635**	17.39	14.00	1.31	3.63	4.36	2.18	0.44	0.50
3-11/16 thru 4	**066636**	17.75	14.00	1.75	4.13	4.91	2.46	0.44	0.50
4-7/16 4-1/2	**066637**	20.36	16.00	1.75	4.63	5.68	2.84	0.44	0.50
4-15/16 5	**066638**	25.17	20.00	2.00	5.13	6.88	3.44	0.44	0.50
5-7/16 5-1/2	**066642**	27.82	22.00	2.00	5.63	8.05	4.03	0.69	0.50
5-15/16 6	**066643**	28.75	22.00	2.00	6.13	9.13	4.57	0.75	0.50
6-7/16 thru 7	**066644**	31.54	24.00	2.00	7.13	10.08	5.04	0.75	0.50



DIMENSIONS

IMPERIAL Lockplate Kit

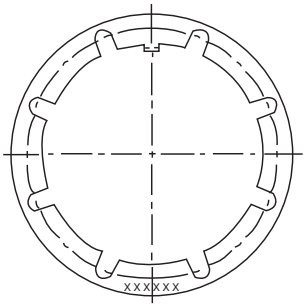

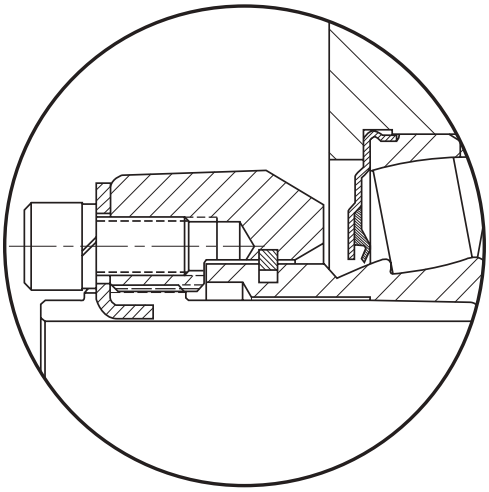

The Lockplate Kits consists of:
- Lockplate
- 2 Socket Head Capscrews
- 2 Lockwashers

Shaft Size Inch	Part Number
1-7/16	**048925**
1-11/16	**048926**
1-15/16 2 SM	**048927**
2 LG 2-3/16	**048928**
2-3/8 2-7/16	**048929**
2-11/16 2-3/4 2-15/16	**048930**
3-7/16	**048931**
3-15/16	**048932**
4-7/16	**048933**
4-15/16	**048934**

DIMENSIONS

Steel IMPERIAL Open End Covers



Shaft Size	Front End				Backside			
	IMPERIAL		E-IMPERIAL		IMPERIAL		E-IMPERIAL	
	Dodge Part No.	Description	Dodge Part No.	Description	Dodge Part No.	Description	Dodge Part No.	Description
1-1/8	**070160**	IPECO-08-102	**070160**	IPECO-08-102	**072500**	S2IPBECO-08-102	**072500**	S2IPBECO-08-102
1-3/16	**070161**	IPECO-08-103	**070161**	IPECO-08-103	**072501**	S2IPBECO-08-103	**072501**	S2IPBECO-08-103
1-1/4	**070162**	IPECO-08-104	**070162**	IPECO-08-104	**072502**	S2IPBECO-08-104	**072502**	S2IPBECO-08-104
1-3/8	**070163**	IPECO-08-106	**070163**	IPECO-08-106	**072503**	S2IPBECO-08-106	**072503**	S2IPBECO-08-106
1-7/16	**070164**	IPECO-08-107	**070164**	IPECO-08-107	**072504**	S2IPBECO-08-107	**072504**	S2IPBECO-08-107
1-1/2	**070165**	IPECO-08-108	**070166**	IPECO-09-108	**072505**	S2IPBECO-08-108	**072506**	S2IPBECO-09-108
1-5/8	**070167**	IPECO-09-110	**070167**	IPECO-09-110	**072507**	S2IPBECO-09-110	**072507**	S2IPBECO-09-110
1-11/16	**070168**	IPECO-09-111	**070168**	IPECO-09-111	**072508**	S2IPBECO-09-111	**072508**	S2IPBECO-09-111
1-3/4	**070169**	IPECO-09-112	**070170**	IPECO-10-112	**072509**	S2IPBECO-09-112	**072510**	S2IPBECO-10-112
1-7/8	**070171**	IPECO-10-114	**070171**	IPECO-10-114	**072511**	S2IPBECO-10-114	**072511**	S2IPBECO-10-114
1-15/16	**070172**	IPECO-10-115	**070172**	IPECO-10-115	**072512**	S2IPBECO-10-115	**072512**	S2IPBECO-10-115
2	**070173**	IPECO-10-200	**070173**	IPECO-10-200	**072513**	S2IPBECO-10-200	**072513**	S2IPBECO-10-200
2-3/16	**070174**	IPECO-11-203	**070174**	IPECO-11-203	**072514**	S2IPBECO-11-203	**072514**	S2IPBECO-11-203
2-1/4	**070175**	IPECO-11-204	**070176**	S2IPECO-13-204	**072515**	S2IPBECO-11-204	**072516**	S2IPBECO-13-204
2-3/8	**070177**	S2IPECO-13-206	**070177**	S2IPECO-13-206	**072517**	S2IPBECO-13-206	**072517**	S2IPBECO-13-206
2-7/16	**070178**	S2IPECO-13-207	**070178**	S2IPECO-13-207	**072518**	S2IPBECO-13-207	**072518**	S2IPBECO-13-207
2-1/2	**070179**	S2IPECO-13-208	**070179**	S2IPECO-13-208	**072519**	S2IPBECO-13-208	**072519**	S2IPBECO-13-208
2-11/16	**070180**	IPECO-15-211	**070180**	IPECO-15-211	**072520**	S2IPBECO-15-211	**072520**	S2IPBECO-15-211
2-3/4	**070181**	IPECO-15-212	**070181**	IPECO-15-212	**072521**	S2IPBECO-15-212	**072521**	S2IPBECO-15-212
2-15/16	**070182**	IPECO-15-215	**070182**	IPECO-15-215	**072522**	S2IPBECO-15-215	**072522**	S2IPBECO-15-215
3	**070183**	IPECO-15-300	**070183**	IPECO-15-300	**072523**	S2IPBECO-15-300	**072523**	S2IPBECO-15-300
3-3/16	**070184**	S2IPECO-18-303	**070184**	S2IPECO-18-303	**072524**	S2IPBECO-18-303	**072524**	S2IPBECO-18-303
3-1/4	**070185**	S2IPECO-18-304	**070185**	S2IPECO-18-304	**072525**	S2IPBECO-18-304	**072525**	S2IPBECO-18-304
3-7/16	**070186**	S2IPECO-18-307	**070186**	S2IPECO-18-307	**072526**	S2IPBECO-18-307	**072526**	S2IPBECO-18-307
3-1/2	**070187**	S2IPECO-18-308	**070187**	S2IPECO-18-308	**072527**	S2IPBECO-18-308	**072527**	S2IPBECO-18-308
3-11/16	**070188**	S2IPECO-20-311	**070188**	S2IPECO-20-311	**072528**	S2IPBECO-20-311	**072528**	S2IPBECO-20-311
3-15/16	**070189**	S2IPECO-20-315	**070189**	S2IPECO-20-315	**072529**	S2IPBECO-20-315	**072529**	S2IPBECO-20-315
4	**070190**	S2IPECO-20-400	**070190**	S2IPECO-20-400	**072530**	S2IPBECO-20-400	**072530**	S2IPBECO-20-400
4-7/16	**070191**	S2IPECO-22-407	**070191**	S2IPECO-22-407	**072531**	IPBECO-22-407	**072531**	IPBECO-22-407
4-1/2	**070192**	S2IPECO-22-408	**070192**	S2IPECO-22-408	**072533**	IPBECO-22-408	**072533**	IPBECO-22-408
4-15/16	**070193**	S2IPECO-26-415	**070193**	S2IPECO-26-415	**072534**	IPBECO-26-415	**072534**	IPBECO-26-415
5	**070194**	S2IPECO-26-500	**070194**	S2IPECO-26-500	**072536**	IPBECO-26-500	**072536**	IPBECO-26-500

NOTE: ISAF product will use the same front end covers on the sides of the housing

FEATURES/BENEFITS PAGE B14-2	SPECIFICATIONS PAGE B14-5	HOW TO ORDER/NOMENCLATUE PAGE B14-8	SELECTION PAGE B14-14

Steel IMPERIAL Closed End Covers



Shaft Size	IMPERIAL		E-IMPERIAL	
	Dodge Part No.	Description	Dodge Part No.	Description
1-1/8 to 1-7/16	**069960**	IPEC08	**069960**	IPEC08
1-1/2	**069960**	IPEC08	**069961**	IPEC09
1-5/8 to 1-11/16	**069961**	IPEC09	**069961**	IPEC09
1-3/4	**069961**	IPEC09	**069962**	IPEC10
1-7/8 to 2	**069962**	IPEC10	**069962**	IPEC10
2-3/16	**069963**	IPEC11	**069963**	IPEC11
2-1/4	**069963**	IPEC11	**069964**	IPEC13
2-3/8 to 2-1/2	**069964**	IPEC13	**069964**	IPEC13
2-11/16 to 3	**069965**	IPEC15	**069965**	IPEC15
3-3/16 to 3-1/2	**069966**	IPEC18	**069966**	IPEC18
3-11/16 to 4	**069967**	S2IPEC20	**069967**	S2IPEC20
4-7/16 to 4-1/2	**069968**	S2IPEC22	**069968**	S2IPEC22
4-15/16 to 5	**069969**	S2IPEC26	**069969**	S2IPEC26

DIMENSIONS

IP End Cover

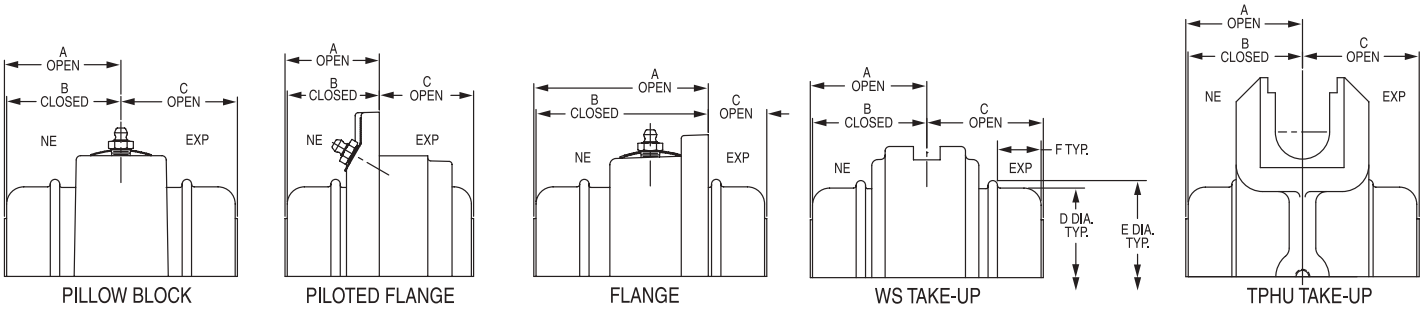

PILLOW BLOCK | PILOTED FLANGE | FLANGE | WS TAKE-UP | TPHU TAKE-UP

	Shaft Size	IP Pillow Block (2 Bolt)	IP Pillow Block (4 Bolt)	IP Piloted Flange	IP Round Flange	IP Square Flange	Wide Slot Take-Up
A Open	1-1/8	2.03		1.67	3.12	3.45	2.06
B Closed	Thru	1.97	N/A	1.61	3.06	3.39	2.00
C Open	1-1/2	2.10		2.46	0.99	0.99	2.10
A Open	1-5/8	2.22		1.83	3.33	4.07	2.19
B Closed	1-11/16	2.16	N/A	1.77	3.27	4.01	2.13
C Open	1-3/4	2.25		2.60	1.10	1.10	2.25
A Open	1-7/8	2.31		1.92	3.47	3.95	2.25
B Closed	1-15/16	2.25	N/A	1.86	3.41	3.89	2.19
C Open	2	2.45		2.83	1.28	1.28	2.45
A Open	2-3/16	2.47		2.00	3.69	4.53	2.42
B Closed	Thru	2.41	N/A	1.94	3.63	4.47	2.36
C Open	2-1/4	2.54		3.00	1.32	1.32	2.54
A Open	2-3/8	2.53	2.53	2.18	4.04	4.72	2.53
B Closed	2-7/16	2.44	2.44	2.09	3.95	4.63	2.44
C Open	2-1/2	2.77	2.77	3.24	1.37	1.37	2.77
A Open	2-11/16	2.65	2.65	2.29	4.18	5.06	2.70
B Closed	Thru	2.56	2.56	2.20	4.09	4.97	2.61
C Open	3	3.06	3.06	3.54	1.66	1.66	3.06
A Open	3-3/16	3.07	3.07	2.91		5.78	3.07
B Closed	Thru	2.94	2.94	2.78	N/A	5.65	2.94
C Open	3-1/2	3.31	3.31	3.59		1.63	3.31
A Open	3-11/16	3.49	3.49	3.32		7.17	3.52
B Closed	Thru	3.36	3.36	3.19	N/A	7.04	3.39
C Open	4	3.80	3.80	4.13		1.94	3.80
A Open	4-7/16		3.96	4.02			
B Closed	Thru	N/A	3.83	3.89	N/A	N/A	N/A
C Open	4-1/2		4.23	4.16			
A Open	4-15/16		4.49	4.24			
B Closed	Thru	N/A	4.36	4.11	N/A	N/A	N/A
C Open	5		4.69	4.91			

DIMENSIONS

IP End Cover

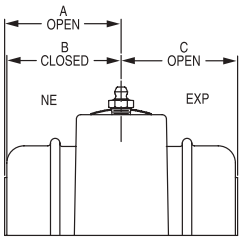

PILLOW BLOCK

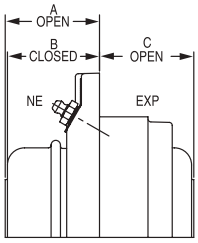

PILOTED FLANGE

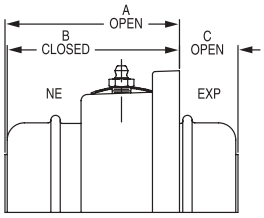

FLANGE

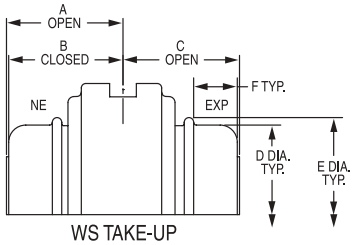

WS TAKE-UP

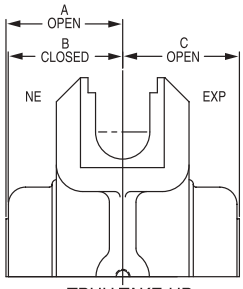

TPHU TAKE-UP

	Shaft Size	E-IP Pillow Block (2 Bolt)	E-IP Pillow Block (4 Bolt)	E-IP Piloted Flange	E-IP Square Flange	D	E	F		Shaft Size	ISAF Pillow Block (2 Bolt)	ISAF Pillow Block (4 Bolt)
A Open	1-3/8	2.03		1.67	3.45				A Open		2.04	
B Closed	Thru	1.97	N/A	1.61	3.39	2.94	3.19	3/4	B Closed	1-7/16	1.98	N/A
C Open	1-7/16	2.07		2.46	1.20				C Open		2.05	
A Open	1-1/2	2.22		1.83	4.07				A Open		2.20	
B Closed	1-5/8	2.16	N/A	1.77	4.01	3.27	3.39	7/8	B Closed	1-11/16	2.14	N/A
C Open	1-11/16	2.22		2.60	1.20				C Open		2.18	
A Open	1-3/4	2.31		1.92	3.95				A Open		2.35	
B Closed	Thru	2.25	N/A	1.86	3.89	3.52	3.61	1-1/64	B Closed	1-15/16	2.29	N/A
C Open	2	2.45		2.83	1.38				C Open		2.37	
A Open		2.47		2.00	4.53				A Open		2.46	
B Closed	2-3/16	2.41	N/A	1.94	4.47	3.77	3.95	1-1/32	B Closed	2-3/16	2.40	N/A
C Open		2.54		3.00	1.43				C Open		2.44	
A Open	2-1/4	2.53	2.53	2.18	4.72				A Open		2.74	2.74
B Closed	2-7/16	2.44	2.44	2.09	4.63	4.41	4.64	1	B Closed	2-7/16	2.65	2.65
C Open	2-1/2	2.77	2.77	3.24	1.69				C Open		2.69	2.69
A Open	2-11/16	2.65	2.63	2.29	5.06				A Open		2.83	2.83
B Closed	Thru	2.56	2.54	2.20	4.97	4.92	5.06	1-7/32	B Closed	2-11/16	2.74	2.74
C Open	3	3.06	3.06	3.54	1.62				C Open		2.94	2.94
A Open	3-3/16	3.07	3.04	2.91	5.78				A Open		2.83	2.83
B Closed	Thru	2.94	2.91	2.78	5.65	5.98	6.22	1-1/8	B Closed	2-15/16	2.74	2.74
C Open	3-1/2	3.31	3.31	3.59	1.38				C Open		2.98	2.98
A Open	3-15/16		3.80	3.31	7.17				A Open		3.31	3.31
B Closed	Thru	N/A	3.67	3.19	7.04	6.67	6.91	1-3/8	B Closed	3-7/16	3.18	3.18
C Open	4		3.80	4.13	2.06				C Open		3.26	3.26
A Open	4-7/16		3.91	3.85	7.62				A Open			3.70
B Closed	Thru	N/A	3.78	3.72	7.49	7.31	7.56	1-43/64	B Closed	3-15/16	N/A	3.57
C Open	4-1/2		4.23	4.68	4.23				C Open			3.68
A Open	4-15/16		4.46	4.08					A Open			4.05
B Closed	Thru	N/A	4.33	3.95	N/A	8.44	8.69	1-29/32	B Closed	4-7/16	N/A	3.92
C Open	5		4.69	5.37					C Open			4.02
									A Open			4.55
									B Closed	4-15/16	N/A	4.42
									C Open			4.49

FEATURES/BENEFITS PAGE B14-2	SPECIFICATIONS PAGE B14-5	HOW TO ORDER/NOMENCLATUE PAGE B14-8	SELECTION PAGE B14-14

DIMENSIONS

ISN End Cap

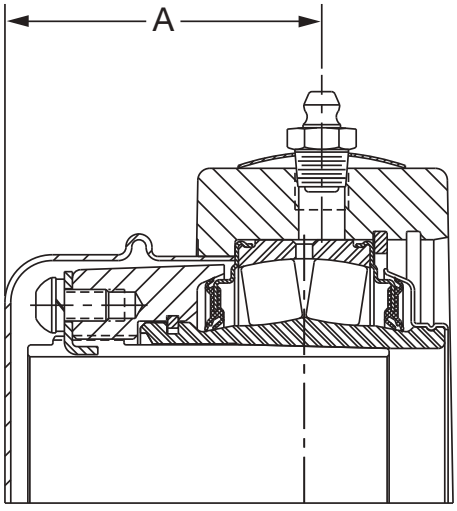

PILLOW BLOCK

Shaft Size (mm)	End Cover P/N	Description	"A" Dimension
30	**069960**	IPEC08	49.5
35	**069960**	IPEC08	49.5
40	**069961**	IPEC09	55
45	**069962**	IPEC10	58.3
50	**069962**	IPEC10	58.3
55	**069963**	IPEC11	61.7
60	**069964**	IPEC13	66.3
65	**069965**	IPEC15	70
70	**069965**	IPEC15	70
75	**069965**	IPEC15	70
80	**069966**	S2IPEC18	78.3
85	**069966**	S2IPEC18	78.3
90	**069967**	S2IPEC20	91.2
100	**069967**	S2IPEC20	91.2
110	**069968**	S2IPEC22	97.7
115	**069969**	S2IPEC26	111.4
125	**069969**	S2IPEC26	111.4

CONTENTS

UNIFIED™ SAF



Features / Benefits
- DODGE UNIFIED SAF and SDAF Pillow Blocks B15-3
- DODGE UNIFIED SAF with SPLIT-SPHER Bearing B15-5
- SAFS B15-6
- SAF-XT Spherical Roller Bearings B15-6

Specification B15-7
How To Order B15-7
Nomenclature B15-8
Selection B15-13
Selection/Dimensions
- USAF 500 . . . . . B15-26
- USAF SMART B15-54
- SAF-XT and SAFS B15-56
- SPLIT-SPHER ™ B15-72
- USDAF B15-82
- USAF 600 . . . . . B15-94
- USAF 200 . . . . . B15-100
- USAF 300 . . . . . B15-112
- USAF Stabilizing Ring B15-125
- USAF Housing Features B15-126
- USAF Housing vs Seal Group Chart B15-130
- DODGE Cool Lube 2 System B15-131

Part Number Index INDEX-1
Key Word Index KEYWORD-1

CONTENTS





DODGE UNIFIED SAF and SDAF Pillow Blocks

BEARINGS

Spherical Roller Bearing - 22200, 22300, 23000, 23100 and 23200, tapered bore for adapter mount and straight bore for direct mount.

SPLIT-SPHER Bearing

Complete split replacement for an adapter mounted 22200. Compatible with UNIFIED SAF. Available in inch bores.

SHAFT SIZES

Available for shaft sizes 1-7/16” - 15-3/4” and 40 mm-140 mm in adapter mount. Additional sizes offered in direct mount. Pillow blocks are available in 200, 300, 500 and 600 series.

DIMENSIONS

UNIFIED SAF and SDAF pillow blocks match standard SAF and SDAF inch dimensions.

PLUS YOU GET BUILT-IN DESIGN ADVANCEMENTS

With DODGE UNIFIED SAF and SDAF pillow blocks, you benefit from a housing that has capabilities for harsh environments that competitive pillow blocks do not have.



VIRTUALLY EVERY FEATURE YOU EVER WANTED IN YOUR PILLOW BLOCK

- Cast-in dimples locate drill holes for lube fittings, vents, sensors and mounting modifications.
- Housing base is threaded to accept four Grade 5 cap bolts for added strength. Cap bolts match base bolts for one-wrench installation.
- Standard housings have two oversized drains adaptable to circulating oil systems.
- Pry slots allow easy separation of the pillow block.

NOTE: Instruction manuals for all Dodge bearings are available on www.dodge-pt.com

FEATURES/BENEFITS

DODGE UNIFIED SAF and SDAF Pillow Blocks



Cast iron, closed-end housings offer greater protection in high pressure washdown environments. Available from stock.



Solid cast iron feet increase strength in both two and four-bolt styles.

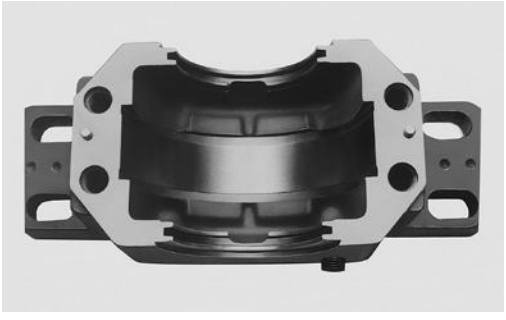

Large capacity oil sump lowers operating temperatures, undercut bearing seat allows full lateral travel of expansion bearing, prevents stabilizer ring from binding, makes installation easy.

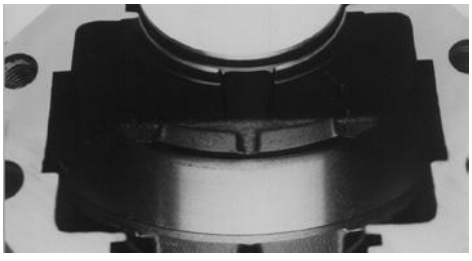

Oil return slots are cast into the interior seal grooves to keep lubricants in. This allows oil in the seal grooves to return to the oil sump instead of leaking.



Standard modifications for wet and harsh environments include nylon coating, epoxy paints and nickel plating, as well as stainless steel hardware.



New drop-in TRIPLE-TECT Seal makes seal installation easier



Exclusive oil-equalization passage simplifies maintenance. Pillow block can be drained completely from either side.



Offset dowels with matched numbers on cap and base joint simplify correct assembly.



DODGE UNIFIED SAF with SPLIT-SPHER Bearing

SPLIT-SPHER BEARINGS FROM DODGE INCREASE PRODUCTION AND REDUCE DOWNTIME

The SPLIT-SPHER bearing is quick to install. Simplified bearing installation puts equipment back into operation faster and keeps production moving.

HERE'S WHY!

DODGE offers a split-race spherical bearing that fits SAF housings and replaces bearing and adapter assemblies. It's a real cost-saver in every case where the shaft must be stripped of components to permit sliding the new bearing onto its proper shaft location.

DIMENSIONS ARE STANDARD.

The DODGE SPLIT-SPHER bearing has the same O.D. dimensions as a standard spherical bearing. This means you can use a SPLIT-SPHER pillow block on the inaccessible end of a shaft and a standard pillow block on the accessible end. DODGE offers the only split-race bearings made to standard SAF pillow block dimensions.

Also, if needed, the backing dimension of the SPLIT-SPHER block can be increased by shimming to meet the requirements of any roller bearing it replaces.

REDUCE REPLACEMENT TIME UP TO 50%.

To replace a standard spherical roller bearing with a SPLIT-SPHER insert, remove the cap, elevate the shaft enough to support the load and burn off the failed bearing and adapter with a torch.

The DODGE SPLIT-SPHER replacement lower halves can then be slipped under the shaft, along with the split seals. Bolt the upper halves in place, lower the shaft and replace the cap. There's no need to remove any other shaft-mounted components or move motors and other bulky machinery.



The SPLIT-SPHER insert is easy to install!

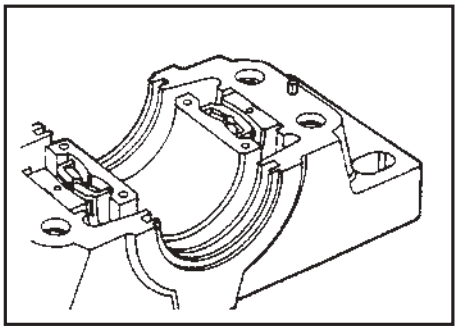

1. Slightly elevate shaft, cut off old bearing and slip lower halves of SPLIT-SPHER rings and roller assembly beneath shaft

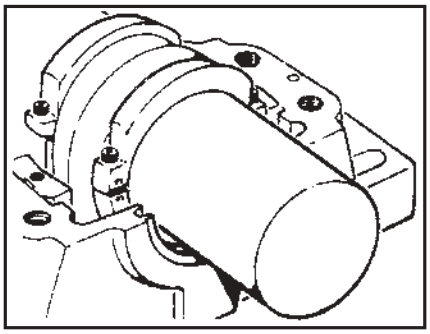

2. Bolt upper half of inner ring to lower half

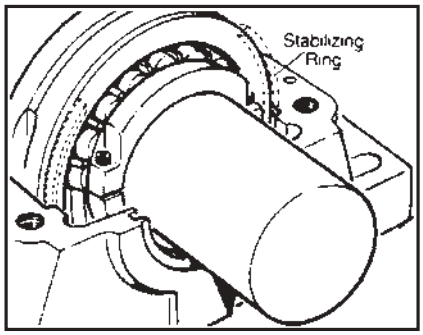

3. Place upper half of roller assembly in position and bolt on upper half of outer ring. Lower shaft and replace housing cap.

FEATURES/BENEFITS

SAF-XT Spherical Roller Bearings



The SAF-XT pillow block has only one grease fitting. Bearings with costly, comparably effective auxiliary seals have up to three grease fittings. The single fitting speeds up lubrication, reduces chance for voids. Complete fill, bearing action, and configuration of reservoir assure maximum purging effectiveness. Grease relief channels result in self-centering positive contact seal. These factors make SAF-XT blocks easy to lubricate.

The SAF-XT Pillow Block Housing is designed for typical SAF dimensional interchangeability, complete with such desirable features as 4-bolt caps, cap removal pry slots, elongated bolt holes, and dimpled feet for doweling. In addition to these features the SAF-XT housing also incorporates a better grease purging/sealing system for extra protection of the bearing in a hostile environment.

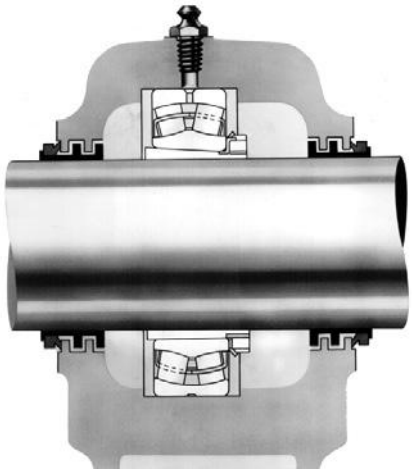

SAFS



DODGE SAFS cast steel pillow blocks mount 22200K series spherical roller bearings on 2-7/16” - 8” shafts.

These pillow blocks are well suited for applications requiring either grease or oil lubrication where adapter mounting is preferred and limited thrust loads are experienced. Cast steel housings provide greater resistance to impact and shock loading than the more economical cast iron pillow blocks. (SPLIT-SPHER bearing and seals may also be installed in SAFS housings. See page B15-76 through B15-81 .)

SAFS pillow blocks are furnished complete with the TRIPLE-TECT combination labyrinth and face rubbing seals. LER triple ring seals are available as an alternate seal for SAFS pillow blocks. Where required, purgeable auxiliary seals and end closures are also available.

SPECIFICATION



Housing

Grade 30 cast iron is the standard housing material except on SAFS housings. When steel housings are required, the SAFS bearing line is recommended.

SPECIAL DRILLING

The standard offering includes a W33 lube hole and fitting, along with a cap vent hole. UNIFIED Bearings also come standard with dual oversized drain holes in the base. Additional holes may be drilled to meet customer specifications for lube, vent and sensor locations. To order, specify holes required from chart on page B15-126 and add to the end of the description. Order by description instead of part number. Minimum order quantities will be required for this special drilling.

SPECIAL FINISHES

A variety of finishes are available for extra corrosion resistance. The standard finish is a water based U.S.D.A. approved paint. When special finishes are specified, DODGE recommends the use of stainless steel cap bolts and grease fittings. To order, specify the “type of finish” required and “stainless bolts and fittings” at the end of the description. Order by description for special finishes.

BEARINGS

Standard bearings offered are 22200 and 22300 series metal caged, double row, spherical bearings with C3 fits in both direct and adapter mounts (shaft sizes larger than 8” are standard with C0 fit). Other double row spherical bearing series are available on request including 23000 and 23200 in both direct and adapter mount. Self aligning ball bearing series 1200, 1300 and 2200 in both adapter and direct mount are available on request. To order, specify bearing “series” or “fit” at the end of the description.

For applications requiring modifications not listed, we encourage you to contact our Application Engineering Department for Bearings at 864-284-5700 during the hours of 8:00 a.m. and 5:00 p.m. Eastern time.

HOW TO ORDER

Inch

DODGE UNIFIED Spherical Bearings are housed and sealed general purpose, high capacity double row spherical roller bearings. Bearings may be mounted on shafts with adapters, or they may be mounted directly, using interference fits.

The standard material used in housings is ASTM A48 Class 30 Cast iron. Steel versions are also available in the SAFS line on page B15-61 Housings may be modified to suit customer requirements for mounting, venting, lubricating or monitoring of the bearing. Housing designs are available for performance in extreme harsh environments through the use of cast closed ends, nylon coating and stainless steel hardware.

A wide variety of standard seals is available including labyrinth and rubbing seals and combinations of the two. DODGE TRIPLE-TECT and Drop-in TRIPLE-TECT seals are recommended for general purpose applications because of their superior combination sealing action. More information on seals is shown on page B15-19.

Locking devices, including tapered adapters and locking washers and nuts, are available to accommodate both commercial and precision machined shafting.

How to Order Dodge UNIFIED Bearings

There are two ways to specify DODGE Bearings. Most of the product offering have part numbers, with listings shown throughout this catalog. Use of part numbers insures accurate order processing.

When part numbers are not shown, the product may be specified by description. This method is used when ordering units that include modifications/options. To order by description, use the nomenclature key shown on page B15-8 and add any special instructions to the end of the description for options not covered by the nomenclature.

NOMENCLATURE



Complete Pillow Block - Inch

P2B - 515 - USAF - 207 - TT

HOUSING STYLE

P2B -	2 Bolt Base Pillow Block, Cast Iron, Both Ends Open
P4B -	4 Bolt Base Pillow Block, Cast Iron, Both Ends Open
CP2B -	2 Bolt Base Pillow Block, Cast Iron, One End Closed
CP4B -	4 Bolt Base Pillow Block, Cast Iron, One End Closed

BEARING SERIES AND HOUSING SIZE

2XX -	For Direct Mount 22200 Series Bearing
3XX -	For Direct Mount 22300 Series Bearing
5XX -	For Adapter Mounted 22200K Series Bearing
6XX -	For Adapter Mounted 22300K Series Bearing
0XX -	For Adapter Mounted 23000K Series Bearing

TYPE OF MOUNTED BEARING

USAF -	UNIFIED SAF Pillow Block (Inch Dimensions)
USDAF -	UNIFIED SDAF Pillow Block
SS -	SPLIT-SPHER Pillow Block

SIZE INCHES

207	- Inches & 16ths
2 =	2”
07 =	7/16”
107 =	1-7/16”
111 =	1-11/16”
115 =	1-15/16”
203 =	2-3/16”
207 =	2-7/16”
208 =	2-1/2”
211 =	2-11/16”
212 =	2-3/4”
215 =	2-15/16”
300 =	3”
303 =	3-3/16”
307 =	3-7/16”
308 =	3-1/2”
315 =	3-15/16”
400 =	4”
403 =	4-3/16”
407 =	4-7/16”
408 =	4-1/2”
415 =	4-15/16”
500 =	5”
503 =	5-3/16”
507 =	5-7/16”
508 =	5-1/2”
515 =	5-15/16”
600 =	6”
607 =	6-7/16”
608 =	6-1/2”
615 =	6-15/16”
700 =	7”
703 =	7-3/16”
708 =	7-1/2”
715 =	7-15/16”
800 =	8”
807 =	8-7/16”
808 =	8-1/2”
815 =	8-15/16”
900 =	9”
907 =	9-7/16”
908 =	9-1/2”
915 =	9-15/16”
1000 =	10”
1007 =	10-7/16”
1008 =	10-1/2”

SEAL TYPE

TT -	TRIPLE-TECT
LER -	Metal Labyrinth
SS -	Split Non-Metallic Labyrinth
TTDN -	Drop-In TRIPLE-TECT
AUX -	Auxiliary (Taconite)
EC -	End Closure

For monitor equipped pillow blocks a C preceding the pillow block designation indicates closed ends

NOMENCLATURE



Housing Only (Housing and Stab Ring) Inch

H4S - 515 - USAF

HOUSING STYLE

H2S - 2 Bolt Base Pillow Block, Cast Iron, Both Ends Open

H4S - 4 Bolt Base Pillow Block, Cast Iron, Both Ends Open

CH2S - 2 Bolt Base Pillow Block, Cast Iron, One End Closed

HOUSING TYPE AND SIZE

2XX - For Direct Mount 22200 Series Bearing

3XX - For Direct Mount 22300 Series Bearing

5XX - For Adapter Mounted 22200K Series Bearing

6XX - For Adapter Mounted 22300K Series Bearing

0XX - For Adapter Mounted 23000K Series Bearing

31XX - For Adapter Mounted 23100K Series Bearing

32XX - For Adapter Mounted 23200K Series Bearing

TYPE OF MOUNTED BEARING HOUSING

USAF - UNIFIED SAF Cast Iron Pillow Block Housing (Inch Dimensions)

USDAF - UNIFIED SDAF Cast Iron Pillow Block Housing (Inch Dimensions)

NOMENCLATURE



Housing Assembly (Housing and Stab Ring and Seals) - Inch

FSAF - 518 X 3-15/16 TTDN CLSD

HOUSING STYLE

SAF - 2 Bolt pillow block housing (4 bolt when no 2 bolt offered)

FSAF - 4 bolt pillow block housing when 2 bolt offered

SDAF - 4 Bolt pillow block housing

HOUSING TYPE AND SIZE

2XX - For Direct Mount 22200 Series Bearing

3XX - For Direct Mount 22300 Series Bearing

5XX - For Adapter Mounted 2200K Series Bearing

6XX - For Adapter Mounted 22300K Series Bearing

0XX - For Adapter Mounted 23000K Series Bearing

31XX - For Adapter Mounted 23100K Series Bearing

32XX - For Adapter Mounted 23200K Series Bearing

SHAFT SIZE INCHES

SEAL TYPE

TT - TRIPLE-TECT

LER - Metal Labyrinth

TTDN - Drop-In TRIPLE-TECT

OTHER

Blank - Both Ends Open

CLSD - Cast Closed One End

Bearing

BRG 22215K C3AH

BEARING

BRG - Roller Bearing

BEARING SERIES

Spherical
Solid Ring Type
222 = 22200 Series
223 = 22300 Series
230 = 23000 Series
231 = 23100 Series
232 = 23200 Series

SS Denotes
Spherical
Split Ring Type

K - Tapered Adapter Sleeve Mounting. Otherwise Bearing Has Cylindrical Bore for Direct Mounting.

OTHER DATA

C3 = Bearing clearance
AH = Air Handling reference

NOMENCLATURE

Seals - Inch

28 TT 207

SEAL GROUP NUMBER

Seals of the Same Group Number All Fit the Same Housings.

TYPE OF SEAL

- TT - TRIPLE-TECT
- TTDN - TRIPLE-TECT with Drop-In Feature
- LER - Metallic Labyrinth Seal
- AUX - Auxiliary (Taconite) Seal
- SS - Split Seal (Non-Metallic LER)

SEAL BORE SIZE

Inches and 16ths
2 = 2" and 07 =7/16"
or 207 = 2-7/16"

Seal Group Number &Shaft Size	Fits Housing Sizes	Seal Group Number &Shaft Size	Fits Housing Sizes	Seal Group Number &Shaft Size	Fits Housing Sizes
08-107	308, 509 & 609	50-315	522 & 622	78-715	544
10-111	309, 510 & 610	50-400	522 & 622	78-800	544
12-114	310	52-403	222, 322, 524 & 624	80-805	244
12-115	308, 511 & 611	54-407	526 & 626	80-806	238 & 338
14-201	311	54-408	220, 320, 526 & 626	82-812	240
14-202	309	54-409	224 & 324	84-907	052
14-203	513 & 613	56-414	222 & 322	84-908	052
14-204	312	56-415	226, 326, 528 & 628	84-909	244
18-206	310	56-500	528 & 628	90-807	048
20-207	515 & 615	58-503	530 & 630	90-808	048
20-208	515 & 615	58-505	224, 324, 228 & 328	90-815	048
22-207	313	60-507	532 & 632	90-900	048
22-209	311	60-508	532 & 632	92-915	056
22-210	314	62-512	230 & 330	92-1000	056
24-211	516 & 616	62-514	226 & 236	94-1007	056L
24-212	516 & 616	64-515	534 & 634	94-1008	056L
24-213	215 & 315	64-600	534 & 634	96-1015	060, 3160, 3260
26-214	312	64-601	232 & 332	96-1100	060, 3160, 3260
28-215	517 & 617	66-604	228 & 328	98-1107	064
28-300	216, 316, 517 & 617	68-607	234, 334 & 536	98-1108	064
28-301	313	68-608	536	100-1115	064L, 3164, 3264
32-303	217 & 317	70-610	230 & 330	100-1200	064L, 3164, 3264
32-304	314	72-614	236	102-1207	068, 168, 268
34-303	518	72-615	538 & 638	104-1215	072
36-306	218	72-700	232, 332, 538 & 638	104-1300	072
38-307	215 & 315	74-703	540	106-1307	072L, 3172
38-310	216 & 316	74-704	238 & 338	106-1308	072L, 3172
42-315	217 & 317	76-707	234 & 334	108-1315	076, 3176
44-402	218	76-708	544S	108-1400	076, 3176
46-307	520 & 620	76-710	240	110-1500	80
46-308	520 & 620	78-713	236	112-1512	84
50-313	220 & 320				

NOMENCLATURE



Adapter Assemblies - Inch

SNW 15 - 207

ADAPTER ASSEMBLY TYPE	BEARING SIZE	ADAPTER BORE SIZE
SNW = Sleeve, Nut and Washer Assembly thru 44 (8 inch) Size SNP = Sleeve, Nut and Lockplate Assembly 048 (8-7/16") and Larger Sizes	Up to 8" shaft size last two digits of bearing numerical description. For larger sizes last four digits.	Inches and 16ths 2 = 2" and 07 =7/16" or 207 = 2-7/16" See size listing page B15-10

H3 15 - SNW - 207

ADAPTER ASSEMBLY TYPE	BEARING SIZE	SNW	ADAPTER BORE SIZE
H3 Adapter Series for 22200K Series Bearings thru 4" Bore Size H31 Adapter Series for 22200K & 23100K Series Bearings Greater Than 4" H23 Adapter Series for 22300K Series Bearings H32 Adapter Series for 23200K Series Bearings	Last two digits of bearing numerical description.	SNW = Sleeve, Nut and Washer Assembly thru 544 (8") Size SNP = Sleeve Nut and Plate Assembly from 048 thru 084, 3156 thru 3176, & 3252 thru 3268	Inches and 16ths 2 = 2" and 07 =7/16" or 207 = 2-7/16" See size listing page B15-10



UNIFIED Pillow Block - Spherical Roller Bearings

(USAF 500, 600, 200, 300 SERIES AND USDAF 23000, 23100, 23200)

DODGE UNIFIED Spherical Roller Bearings have the capacity to carry heavy radial loads and combined radial and thrust loads. The maximum recommended load which can be applied is limited by various components in the system such as bearing, housing, shaft, shaft attachment, speed and life requirements as listed in this catalog. DODGE UNIFIED Spherical Roller Bearings have been applied successfully even when these limits have been exceeded under controlled operating conditions. Contact DODGE Application Engineering (864-284-5700) for applications which exceed the recommendations of this catalog.

L_{10} Hours Life - The life which may be expected from at least 90% of a given group of bearings operating under identical conditions.

$$L_{10}\text{ Life, Hours} = \left(\frac{C}{P}\right)^{10/3} X \left(\frac{16667}{RPM}\right)$$

Where: C = Dynamic Capacity
(Table 1, page B15-15 for USAF) lbs.

P = Equivalent Radial Load, lbs.

GENERAL

Heavy Service - For heavy shock loads, frequent shock loads, or severe vibrations, add up to 50% (according to severity of conditions) to the Equivalent Radial Load to obtain a Modified Equivalent Radial Load. Consult DODGE Application Engineering for additional selection assistance.

Thrust load values shown in the table below are recommended as a guide for general applications that will give adequate L_{10} life. Where substantial radial loads are also present, it is advisable to calculate actual L_{10} life to assure that it meets the requirements.

RPM	20-200	201-2000	Over 2000
RECOMMENDED THRUST LOAD	C/20	C/40	C/60

The shaft tolerances recommended below are adequate for adaptor mounted bearings. Since the allowable load, especially at a low speed, is very large, the shaft should be checked to assure adequate shaft strength.

The magnitude and direction of both the thrust and radial load must be taken into account when selecting a housing. **When pillow blocks are utilized, heavy loads should be directed through the base. Where uplift loads are involved, see B15-24 and for maximum values.** Where a load pulls the housing away from the mounting base, both the hold-down bolts and housing must be of adequate strength. Auxiliary load carrying devices such as shear bars are advisable for side or end loading of plummer blocks.

NOTE: Spherical bearings require a radial load at least equal to the thrust load for proper operation ($F_a/F_R = 1$). If the thrust load exceeds this limit, consult Application Engineering.

SHAFT TOLERANCES

Shaft Size	Shaft Tolerance, Inches
Up To 1-1/2"	+.000 -.002"
1-9/16 to 2-1/2"	+.000 -.003"
2-5/8 to 4"	+.000 -.004"
4-3/16 to 6"	+.000 -.005"
6-7/16" and above	+.000 -.006"

* Use the smaller of this value or the adaptor maximum allowable thrust load list in Table 1.

SELECTING BEARING SUPPORTING RADIAL LOADS ONLY

1. Define L_{10} Life Hours desired.
2. Establish bearing radial load, F_R

   F_R = P for Pure Radial Load Conditions

   P = Equivalent radial load, lbs
   The DODGE program BEST™★ can be used to find application loads.
3. Establish RPM.

Using the easy selection Table 2, page B15-16 , under the RPM column, find the equivalent radial load that equals or is higher than the application radial load for the desired life. The shaft size on the far left will be the minimum shaft size that you can use for your application.If the desired life is different than the values shown on the chart, use alternate Method A shown below.

★ The DODGE Bearing Evaluation and Selection Technique (BEST) is a menu driven computer program that calculates bearing loads, fatigue life and operating temperature for a two bearing shaft system based on user supplied input parameters. This interactive program is available at www.ptwizard.com under the Product Section area.

SELECTION



UNIFIED Pillow Block - Spherical Roller Bearings

Example: 1. L_{10} Life = 30,000 Hours
2. Radial load = 4000 lbs.
3. RPM = 1,000

At the intersection of the 950 RPM column and the 30,000 hours L_{10} life row, the equivalent radial load of 4555 lbs. exceeds the 4000 lbs. application radial load for shaft size 1-7/16 adapter mount (22309K series bearing) and for shaft size 45 mm direct mount (22309 series bearing). Also, the equivalent radial load of 4877 lbs. exceeds the 4000 lbs. application radial load for shaft size 2-3/16" adapter mount (22213K series bearing) and for shaft size 65mm direct mount (22213 series bearing). Therefore, the follow bearings can be used to meet the application conditions of the above example:

1. 1-7/16" adapter mount		22309K bearing
2. 45 mm direct mount		22309 bearing
	OR	
3. 2-3/16" adapter mount		22213K bearing
4. 65 mm direct mount		22213 bearing

ALTERNATE METHOD A - SELECTING A BEARING FOR AN L_{10} LIFE VALUE NOT SHOWN IN THE EASY SELECTION CHART.

The L_{10} life equation can be rearranged so that the bearing dynamic capacity **C** is identified in terms of L_{10}, RPM and P

$$C = \left(\frac{L_{10} \times RPM}{16667} \right)^{0.3} \times P$$

(P = F_R for Pure Radial Load Conditions)

Since the L_{10}, RPM and P are known, solve for **C**. Select from the dynamic capacity column on Table 1, page B15-15 the **C** value equal to or greater than the **C** value just calculated. The bore size on the far left represents the minimum shaft size selection. Check that the application RPM does not exceed the MAX. RPM on Table 1, page B15-15. Also check that the radial load does not exceed the Maximum Allowable Slip Fit Radial Load shown on Table 1. When selecting an L_{10} life of less than 30,000 hours, particular attention must be paid to shaft deflection and proper lubricant selection.

SELECTING BEARINGS SUPPORTING COMBINATION RADIAL AND THRUST LOADS

When a bearing supports both a radial load and a thrust load, the loading on the two rows is shared unequally depending on the ratio of thrust to radial load. The use of the X (radial factor) and Y (thrust factor) from Table 1, page B15-15 converts the applied thrust load and radial loads to an equivalent radial load having the same effect on the life of the bearing as a radial load of this magnitude.

Equation 1

The equivalent radial load $P = XF_R + YF_A$
Where:

P = Equivalent radial load, lbs.
F_R = Radial load, lbs.
F_A = Thrust (axial) load, lbs.
e = Thrust load to radial load factor (Table 1)★
X = Radial load factor (Table 1)★
Y = Thrust load factor (Table 1)★

Calculate F_A/F_R and compare to e for the selected bore size. Determine X and Y from Table 1 depending on whether F_A/F_R is equal to or less than e, or F_A/F_R is greater than e. Substitute all known values into the equivalent radial load equation. P (equivalent radial load) can be used in the life formula to determine L_{10} life in hours, or it can be compared to the allowable equivalent radial load ratings for the speed and hours life desired in the easy selection.

SELECTING BEARINGS SUPPORTING ONLY THRUST LOADS

Spherical Roller Bearings generally are not recommended for pure thrust load applications. They will perform satisfactorily under very light pure thrust loads. Consult DODGE Application Engineering (864-284-5700) during the hours of 8:00 a.m. and 5:00 p.m. Eastern Time.

AXIAL EXPANSION CAPABILITY

Axial expansion capability for UNIFIED SAF 500, 600, 200 and 300 pillow blocks is shown on B15-25. DODGE supplies all UNIFIED pillow block housings with the appropriate stabilizing ring. When the stabilizing ring is used, the pillow block becomes a non-expansion pillow block. Not using the stabilizing ring allows shaft and bearing axial expansion. Proper mounting of the stabilizing ring is shown on housing dimension pages.



UNIFIED Pillow Block - Spherical Roller Bearings

Table 1: Radial & Thrust Factors For USAF Spherical Bearings

Shaft Size		Bearing Series	e	$F_A/F_R \le e$		$F_A/F_R > e$		Adapter Maximum Allowable Thrust Load Pound †	Dynamic Capacity (C) Pounds	Static Capacity (Co) Lbs.	Maximum RPM	
Adapter Mounted Inches	Direct Mount mm			X	Y	X	Y				Grease	Oil
-	40	22308	.36	1	1.9	0.67	2.8	-	35,500	33,500	4300	5300
1-7/16	---	**22209**	.26	1	2.6	0.67	3.9	698	24,500	23,600	5600	7000
	45	22309	.36	1	1.9	0.67	2.8	1092	42,500	41,500	3800	4800
1-11/16	---	**22210**	.24	1	2.8	0.67	4.2	775	26,000	26,500	5300	6700
	50	22310	.36	1	1.9	0.67	2.8	1348	51,000	50,000	3400	4300
1-15/16	---	**22211**	.23	1	2.9	0.67	4.4	927	31,500	32,500	4500	5600
	55	22311	.36	1	1.9	0.67	2.8	1672	60,000	58,500	3200	4000
	60	22312	.35	1	1.9	0.67	3	-	69,500	69,500	2800	3600
2-3/16	---	**22213**	.24	1	2.8	0.67	4.2	1359	45,500	47,500	3800	4500
	65	22313	.34	1	2	0.67	3	2104	78,000	81,500	2600	3400
	70	22314	.34	1	2	0.67	3	-	86,500	86,500	2400	3200
2-7/16	75	**22215**	.22	1	3.1	0.67	4.6	1568	48,000	53,000	3400	4300
2-1/2		22315	.34	1	2	0.67	3	2782	100,000	102,000	2200	3000
2-11/16	80	**22216**	.22	1	3.1	0.67	4.7	1780	56,000	60,000	3200	4000
2-3/4		22316	.34	1	2	0.67	3	3128	112,000	114,000	2200	3000
2-15/16	85	**22217**	.22	1	3.1	0.67	4.5	2063	68,000	73,500	3000	3800
3		22317	.33	1	2	0.67	3	3438	122,000	125,000	2000	2800
3-3/16	90	22218	.23	1	2.9	0.67	4.3	2429	78,000	85,000	2600	3400
3-7/16	100	**22220**	.24	1	2.8	0.67	4.2	3102	96,500	106,000	2200	3000
3-1/2		22320	.34	1	2	0.67	3	4920	183,000	208,000	1700	2200
3-15/16	110	**22222**	.25	1	2.7	0.67	4	3931	122,000	134,000	2000	2800
4		22322	.33	1	2.1	0.67	3.1	5934	212,000	240,000	1500	1900
4-3/16	120	**22224**	.25	1	2.7	0.67	4	4693	143,000	166,000	1900	2400
		22324	.33	1	2.1	0.67	3.1	6959	240,000	265,000	1400	1800
4-7/16	130	**22226**	.26	1	2.6	0.67	3.9	5610	170,000	200,000	1800	2200
4-1/2		22326	.33	1	2.1	0.67	3.1	8152	280,000	310,000	1300	1700
4-15/16	140	**22228**	.25	1	2.7	0.67	4	6419	196,000	236,000	1700	2200
5		22328	.34	1	2	0.67	3	9628	325,000	365,000	1200	1600
5-3/16	150	**22230**	.25	1	2.7	0.67	4	7383	228,000	275,000	1600	2000
		22330	.33	1	2	0.67	3	10923	365,000	415,000	1100	1500
5-7/16	160	**22232**	.26	1	2.6	0.67	3.9	8630	260,000	315,000	1500	1800
5-1/2		22332	.37	1	1.8	0.67	2.7	12298	325,000	365,000	1000	1400
5-15/16	170	**22234**	.26	1	2.6	0.67	3.9	9858	309,000	355,000	1300	1700
6		22334	.37	1	1.8	0.67	2.7	13755	360,000	475,000	950	1300
6-7/16	180	**22236**	.25	1	2.7	0.67	4	10437	305,000	375,000	1300	1600
6-1/2		22336	.37	1	1.8	0.67	2.7	15291	405,000		900	1100
6-15/16	190	**22238**	.28	1	2.4	0.67	3.6	11786	270,000	415,000	1200	1300
7		22338	.37	1	1.8	0.67	2.7	16910	415,000	570,000	850	1100
7-3/16	200	22240	.29	1	2.3	0.67	3.5	13215	300,000	450,000	1100	1200
7-1/2 7-15/16 8	220	**22244**	.29	1 1 1	2.3	0.67	3.5	16020	365,000	550,000	950	1000
8-7/16 8-1/2 8-15/16, 9	-	**23048**	.25	1 1 1	2.7	0.67	4.1	14887	260,000	490,000	950	1000
9-7/16 9-1/2	-	**23052**	.26	1 1	2.6	0.67	3.9	18232	340,000	630,000	900	950
9-15/16,10 10-7/16 10-1/2	-	**23056**	.25	1 1 1	2.7	0.67	4.1	20000	345,000	670,000	850	900

If the thrust load exceeds adapter maximum allowable thrust load, auxiliary methods of carrying thrust are required.

FEATURES/BENEFITS PAGE B15-3	SPECIFICATION/HOW TO ORDER PAGE B15-7	NOMENCLATURE PAGE B15-8	SELECTION/DIMENSIONS PAGE B15-26

SELECTION



UNIFIED Pillow Block - Spherical Roller Bearings

Table 2: Selection Table for UNIFIED SAF Pillow Blocks

Shaft Size		Bearing Series	L_{10} Life Hours	Allowable Equivalent Radial Load Rating (Lbs.) at Various Revolutions Per Minute															
Adapter Mount (Inches)	Direct Mount (mm)			50	100	250	500	750	950	1,300	1,500	1,800	2,000	2,600	3,000	3,200	3,400	4500	5,600
-	40	22308	10,000	12,797	10,394	7,896	6,413	5,679	5,290	4,815	4,613	4,367	4,231	3,911	3,747	3,675	3,609	3,318	
			30,000	9,204	7,476	5,679	4,613	4,084	3,805	3,463	3,318	3,141	3,043	2,813	2,695	2,643	2,595	2,386	
			60,000	7,476	6,072	4,613	3,747	3,318	3,090	2,813	2,695	2,551	2,472	2,285	2,189	2,147	2,108	1,938	
1 -7/16	-	**22209**	**10,000**	**8,831**	**7,173**	**5,449**	**4,426**	**3,919**	**3,651**	**3,323**	**3,183**	**3,014**	**2,920**	**2,699**	**2,586**	**2,536**	**2,490**	**2,290**	**2,144**
			30,000	**6,352**	**5,159**	**3,919**	**3,183**	**2,819**	**2,626**	**2,390**	**2,290**	**2,168**	**2,100**	**1,941**	**1,860**	**1,824**	**1,791**	**1,647**	**1,542**
			60,000	**5,159**	**4,191**	**3,183**	**2,586**	**2,290**	**2,133**	**1,941**	**1,860**	**1,761**	**1,706**	**1,577**	**1,511**	**1,482**	**1,455**	**1,338**	**1,253**
	45	22309	10,000	15,320	12,444	9,453	7,678	6,799	6,333	5,765	5,522	5,228	5,066	4,682	4,485	4,399	4,320	3,972	
			30,000	11,018	8,950	6,799	5,522	4,890	4,555	4,146	3,972	3,760	3,643	3,368	3,226	3,164	3,107	2,857	
			60,000	8,950	7,269	5,522	4,485	3,972	3,700	3,368	3,226	3,054	2,959	2,735	2,620	2,570	2,524	2,320	
1-11/16	-	**22210**	**10,000**	**9,372**	**7,613**	**5,783**	**4,697**	**4,159**	**3,874**	**3,527**	**3,378**	**3,199**	**3,099**	**2,864**	**2,744**	**2,691**	**2,643**	**2,430**	**2,275**
			30,000	**6,741**	**5,475**	**4,159**	**3,378**	**2,991**	**2,787**	**2,536**	**2,430**	**2,300**	**2,229**	**2,060**	**1,974**	**1,936**	**1,901**	**1,748**	**1,637**
			60,000	**5,475**	**4,447**	**3,378**	**2,744**	**2,430**	**2,263**	**2,060**	**1,974**	**1,869**	**1,810**	**1,673**	**1,603**	**1,572**	**1,544**	**1,419**	**1,329**
	50	22310	10,000	18,384	14,932	11,343	9,214	8,158	7,600	6,917	6,627	6,274	6,079	5,619	5,383	5,279	5,184		
			30,000	13,222	10,740	8,158	6,627	5,868	5,466	4,975	4,766	4,512	4,372	4,041	3,871	3,797	3,729		
			60,000	10,740	8,723	6,627	5,383	4,766	4,440	4,041	3,871	3,665	3,551	3,282	3,144	3,084	3,029		
1-15/16	-	**22211**	**10,000**	**11,355**	**9,223**	**7,006**	**5,691**	**5,039**	**4,694**	**4,273**	**4,093**	**3,875**	**3,755**	**3,470**	**3,325**	**3,261**	**3,202**	**2,944**	**2,757**
			30,000	**8,167**	**6,633**	**5,039**	**4,093**	**3,624**	**3,376**	**3,073**	**2,944**	**2,787**	**2,700**	**2,496**	**2,391**	**2,345**	**2,303**	**2,117**	**1,983**
			60,000	**6,633**	**5,388**	**4,093**	**3,325**	**2,944**	**2,742**	**2,496**	**2,391**	**2,264**	**2,193**	**2,027**	**1,942**	**1,905**	**1,871**	**1,720**	**1,611**
	55	22311	10,000	21,628	17,567	13,345	10,840	9,598	8,941	8,138	7,796	7,381	7,152	6,610	6,332	6,211	6,099		
			30,000	15,555	12,635	9,598	7,796	6,903	6,431	5,853	5,607	5,309	5,144	4,754	4,554	4,467	4,387		
			60,000	12,635	10,263	7,796	6,332	5,607	5,223	4,754	4,554	4,312	4,178	3,862	3,699	3,628	3,563		
-	60	**22312**	**10,000**	**25,052**	**20,349**	**15,458**	**12,556**	**11,118**	**10,357**	**9,427**	**9,031**	**8,550**	**8,284**	**7,657**	**7,335**	**7,194**	**7,065**		
			30,000	**18,018**	**14,635**	**11,118**	**9,031**	**7,996**	**7,449**	**6,780**	**6,495**	**6,149**	**5,958**	**5,507**	**5,276**	**5,174**	**5,081**		
			60,000	**14,635**	**11,888**	**9,031**	**7,335**	**6,495**	**6,050**	**5,507**	**5,276**	**4,995**	**4,839**	**4,473**	**4,285**	**4,203**	**4,127**		
2 -3/16	-	22213	10,000	16,401	13,322	10,120	8,220	7,279	6,780	6,171	5,912	5,597	5,423	5,013	4,802	4,710	4,625	4,252	
			30,000	11,796	9,581	7,279	5,912	5,235	4,877	4,439	4,252	4,026	3,901	3,605	3,454	3,388	3,327	3,058	
			60,000	9,581	7,783	5,912	4,802	4,252	3,961	3,605	3,454	3,270	3,168	2,928	2,805	2,752	2,702	2,484	
	65	22313	10,000	28,116	22,838	17,349	14,092	12,478	11,623	10,580	10,135	9,596	9,297	8,593	8,232	8,074	7,929		
			30,000	20,222	16,425	12,478	10,135	8,974	8,360	7,609	7,289	6,901	6,687	6,180	5,921	5,807	5,703		
			60,000	16,425	13,342	10,135	8,232	7,289	6,790	6,180	5,921	5,606	5,431	5,020	4,809	4,717	4,632		
-	70	22314	10,000	31,180	25,326	19,239	15,627	13,837	12,890	11,732	11,239	10,641	10,310	9,530	9,129	8,954			
			30,000	22,426	18,215	13,837	11,239	9,952	9,271	8,438	8,084	7,653	7,415	6,854	6,566	6,440			
			60,000	18,215	14,795	11,239	9,129	8,084	7,530	6,854	6,566	6,217	6,023	5,567	5,333	5,231			
2-7/16 2-1/2	75	**22215**	**10,000**	**17,302**	**14,054**	**10,676**	**8,672**	**7,679**	**7,153**	**6,511**	**6,237**	**5,905**	**5,721**	**5,288**	**5,066**	**4,969**	**4,879**		
			30,000	**12,444**	**10,108**	**7,679**	**6,237**	**5,523**	**5,145**	**4,683**	**4,486**	**4,247**	**4,115**	**3,803**	**3,644**	**3,574**	**3,509**		
			60,000	**10,108**	**8,210**	**6,237**	**5,066**	**4,486**	**4,179**	**3,803**	**3,644**	**3,450**	**3,342**	**3,089**	**2,959**	**2,903**	**2,850**		
	75	22315	10,000	36,047	29,279	22,242	18,066	15,997	14,902	13,564	12,994	12,302	11,919	11,017	10,554				
			30,000	25,926	21,058	15,997	12,994	11,505	10,718	9,755	9,345	8,848	8,573	7,924	7,591				
			60,000	21,058	17,105	12,994	10,554	9,345	8,706	7,924	7,591	7,187	6,963	6,436	6,166				
2- 11/16 2-3/4	80	**22216**	**10,000**	**20,186**	**16,396**	**12,456**	**10,117**	**8,958**	**8,345**	**7,596**	**7,276**	**6,889**	**6,675**	**6,170**	**5,910**	**5,797**	**5,692**		
			30,000	**14,518**	**11,793**	**8,958**	**7,276**	**6,443**	**6,002**	**5,463**	**5,233**	**4,955**	**4,801**	**4,437**	**4,251**	**4,169**	**4,094**		
			60,000	**11,793**	**9,579**	**7,276**	**5,910**	**5,233**	**4,875**	**4,437**	**4,251**	**4,025**	**3,899**	**3,604**	**3,453**	**3,387**	**3,325**		
	80	22316	10,000	40,372	32,793	24,911	20,234	17,917	16,690	15,191	14,553	13,778	13,350	12,339	11,821				
			30,000	29,037	23,585	17,917	14,553	12,886	12,004	10,926	10,467	9,910	9,601	8,875	8,502				
			60,000	23,585	19,157	14,553	11,821	10,467	9,750	8,875	8,502	8,049	7,799	7,208	6,905				

Note: Dark Shaded Areas Require Circulating Oil
Light Shaded Areas Require Static Oil

FEATURES/BENEFITS PAGE B15-3 | SPECIFICATION/HOW TO ORDER PAGE B15-7 | NOMENCLATURE PAGE B15-8 | SELECTION/DIMENSIONS PAGE B15-26



UNIFIED Pillow Block - Spherical Roller Bearings

Table 2: Selection Table for UNIFIED SAF Pillow Blocks

Shaft Size		Bearing Series	L_{10} Life Hours	Allowable Equivalent Radial Load Rating (Lbs.) at Various Revolutions Per Minute														
Adapter Mount (Inches)	Direct Mount (mm)			50	100	250	500	750	950	1,300	1,500	1,800	2,000	2,600	3,000	3,200	3,400	4500	5,600
2 -15/16 3	85	**22217**	**10,000**	**24,512**	**19,910**	**15,125**	**12,285**	**10,878**	**10,133**	**9,223**	**8,836**	**8,365**	**8,105**	**7,492**	**7,177**	**7,039**	**6,912**		
			30,000	**17,629**	**14,320**	**10,878**	**8,836**	**7,824**	**7,288**	**6,634**	**6,355**	**6,017**	**5,829**	**5,388**	**5,162**	**5,063**	**4,971**		
			60,000	**14,320**	**11,631**	**8,836**	**7,177**	**6,355**	**5,920**	**5,388**	**5,162**	**4,887**	**4,735**	**4,377**	**4,193**	**4,112**	**4,038**		
	85	22317	10,000	43,977	35,720	27,135	22,041	19,516	18,180	16,548	15,852	15,008	14,541	13,441					
			30,000	31,629	25,691	19,516	15,852	14,037	13,076	11,901	11,401	10,794	10,459	9,667					
			60,000	25,691	20,868	15,852	12,876	11,401	10,621	9,667	9,261	8,768	8,495	7,852					
3-3/16	90	**22218**	**10,000**	**28,116**	**22,838**	**17,349**	**14,092**	**12,478**	**11,623**	**10,580**	**10,135**	**9,596**	**9,297**	**8,593**	**8,232**	**8,074**	**7,929**		
			30,000	**20,222**	**16,425**	**12,478**	**10,135**	**8,974**	**8,360**	**7,609**	**7,289**	**6,901**	**6,687**	**6,180**	**5,921**	**5,807**	**5,703**		
			60,000	**16,425**	**13,342**	**10,135**	**8,232**	**7,289**	**6,790**	**6,180**	**5,921**	**5,606**	**5,431**	**5,020**	**4,809**	**4,717**	**4,632**		
3 -7/16 3-1/2	100	**22220**	**10,000**	**34,785**	**28,254**	**21,464**	**17,434**	**15,437**	**14,380**	**13,089**	**12,539**	**11,871**	**11,502**	**10,631**	**10,185**				
			30,000	**25,018**	**20,321**	**15,437**	**12,539**	**11,103**	**10,343**	**9,414**	**9,018**	**8,538**	**8,273**	**7,646**	**7,325**				
			60,000	**20,321**	**16,506**	**12,539**	**10,185**	**9,018**	**8,401**	**7,646**	**7,325**	**6,935**	**6,719**	**6,211**	**5,950**				
	100	22320	10,000	65,966	53,581	40,703	33,061	29,275	27,270	24,821	23,778	22,513	21,812						
			30,000	47,444	38,536	29,275	23,778	21,055	19,613	17,852	17,102	16,192	15,688						
			60,000	38,536	31,301	23,778	19,314	17,102	15,931	14,500	13,891	13,152	12,742						
3 -15/16 4	110	**22222**	**10,000**	**43,977**	**35,720**	**27,135**	**22,041**	**19,516**	**18,180**	**16,548**	**15,852**	**15,008**	**14,541**	**13,441**					
			30,000	**31,629**	**25,691**	**19,516**	**15,852**	**14,037**	**13,076**	**11,901**	**11,401**	**10,794**	**10,459**	**9,667**					
			60,000	**25,691**	**20,868**	**15,852**	**12,876**	**11,401**	**10,621**	**9,667**	**9,261**	**8,768**	**8,495**	**7,852**					
	110	22322	10,000	76,419	62,072	47,153	38,300	33,914	31,592	28,755	27,546	26,080							
			30,000	54,962	44,643	33,914	27,546	24,391	22,722	20,681	19,812	18,758							
			60,000	44,643	36,262	27,546	22,375	19,812	18,456	16,798	16,092	15,236							
4 -3/16	120	22224	**10,000**	**51,547**	**41,869**	**31,806**	**25,835**	**22,876**	**21,310**	**19,396**	**18,581**	**17,592**	**17,045**						
			30,000	**37,074**	**30,113**	**22,876**	**18,581**	**16,453**	**15,326**	**13,950**	**13,364**	**12,652**	**12,259**						
			60,000	**30,113**	**24,460**	**18,581**	**15,092**	**13,364**	**12,449**	**11,331**	**10,855**	**10,277**	**9,957**						
	120	22324	10,000	86,512	70,270	53,381	43,359	38,393	35,764	32,553	31,185	29,525							
			30,000	62,222	50,540	38,393	31,185	27,613	25,723	23,413	22,429	21,235							
			60,000	50,540	41,051	31,185	25,330	22,429	20,893	19,017	18,218	17,248							
4 -7/16 4-1/2	130	22226	**10,000**	**61,279**	**49,774**	**37,812**	**30,712**	**27,195**	**25,333**	**23,058**	**22,089**	**20,913**	**20,263**						
			30,000	**44,074**	**35,799**	**27,195**	**22,089**	**19,559**	**18,220**	**16,584**	**15,887**	**15,041**	**14,573**						
			60,000	**35,799**	**29,078**	**22,089**	**17,942**	**15,887**	**14,799**	**13,470**	**12,904**	**12,217**	**11,837**						
	130	22326	10,000	100,931	81,981	62,278	50,585	44,792	41,725	37,978	36,382								
			30,000	72,592	58,963	44,792	36,382	32,215	30,010	27,315	26,167								
			60,000	58,963	47,893	36,382	29,551	26,167	24,375	22,186	21,254								
4 -15/16 5	140	22228	**10,000**	**70,652**	**57,387**	**43,594**	**35,410**	**31,354**	**29,208**	**26,585**	**25,467**	**24,112**	**23,362**						
			30,000	**50,814**	**41,274**	**31,354**	**25,467**	**22,551**	**21,007**	**19,120**	**18,317**	**17,342**	**16,802**						
			60,000	**41,274**	**33,525**	**25,467**	**20,686**	**18,317**	**17,063**	**15,530**	**14,878**	**14,086**	**13,648**						
	140	22328	10,000	117,152	95,157	72,287	58,715	51,990	48,431	44,082	42,229								
			30,000	84,258	68,439	51,990	42,229	37,393	34,833	31,705	30,372								
			60,000	68,439	55,590	42,229	34,301	30,372	28,293	25,752	24,670								
5 -3/16	150	22230	**10,000**	**82,187**	**66,756**	**50,712**	**41,191**	**36,473**	**33,976**	**30,925**	**29,625**	**28,049**	**27,176**						
			30,000	**59,111**	**48,013**	**36,473**	**29,625**	**26,232**	**24,436**	**22,242**	**21,307**	**20,173**	**19,545**						
			60,000	**48,013**	**38,998**	**29,625**	**24,063**	**21,307**	**19,849**	**18,066**	**17,307**	**16,386**	**15,876**						
	150	22330	10,000	131,571	106,869	81,184	65,942	58,389	54,392	49,507									
			30,000	94,629	76,862	58,389	47,427	41,995	39,120	35,607									
			60,000	76,862	62,432	47,427	38,522	34,110	31,775	28,922									

Note: Dark Shaded Areas Require Circulating Oil
Light Shaded Areas Require Static Oil

FEATURES/BENEFITS PAGE B15-3	SPECIFICATION/HOW TO ORDER PAGE B15-7	NOMENCLATURE PAGE B15-8	SELECTION/DIMENSIONS PAGE B15-26

SELECTION



UNIFIED Pillow Block - Spherical Roller Bearings

Table 2: Selection Table for UNIFIED SAF Pillow Blocks

Shaft Size		Bearing Series	L_{10} Life Hours	Allowable Equivalent Radial Load Rating (Lbs.) at Various Revolutions Per Minute														
Adapter Mount (Inches)	Direct Mount (mm)			50	100	250	500	750	950	1,300	1,500	1,800	2,000	2,600	3,000	3,200	3,400	4500	5,600
5- 7/16 5-1/2	160	22232	10,000	93,722	76,126	57,829	46,972	41,592	38,745	35,265	33,783	31,985							
			30,000	67,407	54,751	41,592	33,783	29,914	27,866	25,364	24,298	23,004							
			60,000	54,751	44,472	33,783	27,441	24,298	22,634	20,602	19,736	18,685							
	160	22332	10,000	117,152	95,157	72,287	58,715	51,990	48,431	44,082									
			30,000	84,258	68,439	51,990	42,229	37,393	34,833	31,705									
			60,000	68,439	55,590	42,229	34,301	30,372	28,293	25,752									
5- 15/16 6	170	22234	10,000	108,140	87,837	66,726	54,199	47,991	44,706	40,691	38,981								
			30,000	77,777	63,175	47,991	38,981	34,516	32,153	29,266	28,036								
			60,000	63,175	51,314	38,981	31,662	28,036	26,117	23,771	22,772								
	170	22334	10,000	129,768	105,405	80,071	65,038	57,589	53,647	48,829									
			30,000	93,332	75,809	57,589	46,777	41,420	38,584	35,119									
			60,000	75,809	61,576	46,777	37,995	33,643	31,340	28,525									
6 -7/16 6-1/2	180	22236	10,000	109,943	89,301	67,838	55,102	48,791	45,451	41,369	39,631								
			30,000	79,073	64,227	48,791	39,631	35,092	32,689	29,753	28,503								
			60,000	64,227	52,169	39,631	32,190	28,503	26,552	24,167	23,152								
6 -15/16 7	190	22238	10,000	97,326	79,053	60,054	48,779	43,192	40,235	36,622									
			30,000	69,999	56,857	43,192	35,083	31,065	28,938	26,339									
			60,000	56,857	46,182	35,083	28,496	25,232	23,505	21,394									
	190	22338	10,000	149,594	121,508	92,305	74,975	66,388	61,843										
			30,000	107,591	87,391	66,388	53,923	47,747	44,479										
			60,000	87,391	70,984	53,923	43,799	38,783	36,128										
7-3/16	200	22240	10,000	108,140	87,837	66,726	54,199	47,991	44,706										
			30,000	77,777	63,175	47,991	38,981	34,516	32,153										
			60,000	63,175	51,314	38,981	31,662	28,036	26,117										
7 -1/2 7 -15/16 8	220	22244	10,000	131,571	106,869	81,184	65,942	58,389	54,392										
			30,000	94,629	76,862	58,389	47,427	41,995	39,120										
			60,000	76,862	62,432	47,427	38,522	34,110	31,775										
8 -7/16 8 -1/2 8-15/16, 9		23048	10,000	93,722	76,126	57,829	46,972	41,592	38,745										
			30,000	67,407	54,751	41,592	33,783	29,914	27,866										
			60,000	54,751	44,472	33,783	27,441	24,298	22,634										
9- 7/16 9-1/2		23052	10,000	122,559	99,549	75,623	61,425	54,390	50,666										
			30,000	88,147	71,598	54,390	44,178	39,118	36,440										
			60,000	71,598	58,155	44,178	35,884	31,774	29,599										
9 -15/16 10 10- 7/16 10-1/2		23056	10,000	124,361	101,013	76,735	62,328	55,190											
			30,000	89,444	72,651	55,190	44,828	39,694											
			60,000	72,651	59,011	44,828	36,412	32,241											

Note: Dark Shaded Areas Require Circulating Oil
Light Shaded Areas Require Static Oil



UNIFIED SAF Bearing Seals

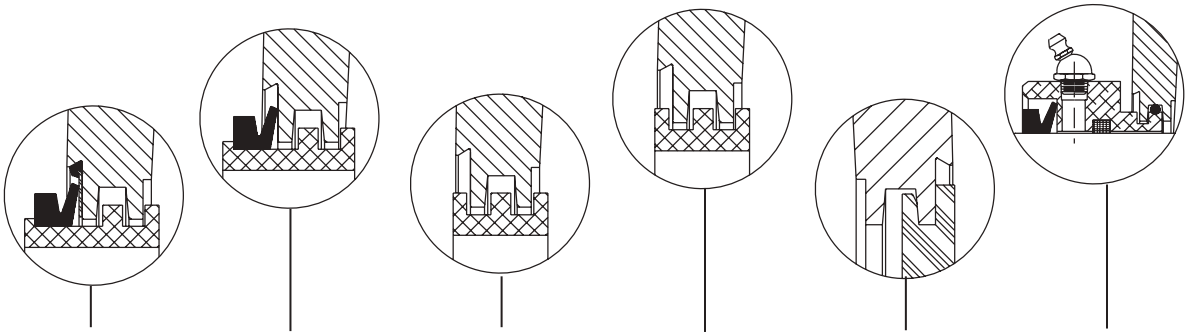

ENVIRONMENT/ APPLICATION	DROP IN TRIPLE-TECT SEAL USAF/USN SAF-XT	TRIPLE-TECT LABYRINTH & FACE RUBBING SEAL USAF/USN SAF-XT	SPLIT LER LABYRINTH SEAL USAF/USN SAF-XT	LER LABYRINTH SEAL USAF/USN SAF-XT	END COVER USAF/USN SAF-XT	AUXILIARY TACONITE SEAL USAF/USN SAF-XT
Dusty/Dirty	+	+	▲	▲	++	+
Wet/Moisture Laden	+	+	O	O	++	+
High Pressure Power Washdown	▲	▲	O	O	++	+
☆ High Temperature	O	O	O	+	▲	O
✯ High Speed	+	+	+	++	NS	O
Chemical	▲	▲	O	O	▲	▲
Misalignment	+	+	+	+	NS	▲

++ Very Good
\+ Good
▲ Questionable (Depends On Condition: Consult DODGE Engineering)
O Not Recommended
NS Not Seal Limited

Notes:
☆ High Temperature is above 200°F
✯ Consideration Of High Speed Can Be A Function Of Type And Bearing Design

DROP-IN TRIPLE TECT SEAL

The patented Drop-In TRIPLE-TECT Seal has all the sealing features of the standard TRIPLE-TECT except it is pre-assembled at the factory for quick and easy field assembly. The Drop-In TRIPLE-TECT Seal assembly consists of a seal ring, v-ring seal and stainless metal seal with rubber bead.

While lowering the shaft bearing and seal assembly into the housing base, the stainless metal seal with rubber bead fits in the outboard “v-shaped” housing groove.

The stainless metal seal gives superior sealing surface to the v-ring and positions the v-ring for easy cap to base housing assembly.



FEATURES/BENEFITS PAGE B15-3	SPECIFICATION/HOW TO ORDER PAGE B15-7	NOMENCLATURE PAGE B15-8	SELECTION/DIMENSIONS PAGE B15-26

SELECTION



UNIFIED SAF Bearing Lubrication

SELECTING LUBRICATION

DODGE UNIFIED pillow blocks are lubricated by the user at installation. DODGE UNIFIED bearings are specially designed to handle either grease or oil lubrication.

GREASE LUBRICATION:

DODGE UNIFIED bearings are designed to meet the rigorous demands of dirty, dusty or wet environments. In order to properly protect bearings during installation, pack the bearing insert 100% full of grease immediately after properly mounting the bearing on the shaft. If the RPM of the application falls between 20% and 80% of maximum RPM (Table 1, page B15-15), pack the lower half of the housing one-third to one-half full. If the RPM of the application is less than 20% of maximum RPM, pack bearing housing cavity 100% full. If the RPM exceeds 80% of maximum RPM, do not add grease in the lower half of the housing or in the cap.

At each re-greasing cycle, for applications up to 80% of maximum RPM, slowly add grease until fresh grease is seen purging at the seals. Re-greasing should be done while running. Remote re-greasing lines should be added to avoid endangering personnel. If the RPM is greater than 80% of maximum RPM, add 4 strokes of a handgun at each re-greasing cycle for bores up to 2. For bores greater than 2 up to 5, add 8 strokes of a handgun at each re-greasing cycle. For bores greater than 5 up to 10-1/2, add 16 strokes of a handgun at each re-greasing cycle. For bores greater than 10-1/2, and up to 12-1/2 add 32 strokes of a handgun at each re-greasing cycle. For bores greater than 12-1/2 up to 15-3/4 add 64 strokes of a handgun at each regreasing cycle. For units running above 80% of maximum RPM, running temperature should be monitored. If a drastic change in running temperature is noted, DODGE recommends removing the used grease completely and recharging with fresh grease per the above instructions. For warning before catastrophic failure, see DODGE Smart Bearing Package on page B15-54

Select a grease with a viscosity at an operating temperature which will provide full film lubrication (see Table 3 below). Use a 50°F to 100°F increase in bearing temperature above ambient, depending on RPM and load. Use Table 4, page B15-21 as a general guide for re-greasing the bearings. A small amount of grease at frequent intervals is preferable to a large amount of grease at infrequent intervals. For special applications involving high speeds, high loads, or very low speeds, consult DODGE Application Engineering (864-284-5700) during the hours of 8:00 a.m. and 5:00 p.m. Eastern Time.

Table 3: Viscosity Of Oil, Or Oil In Grease

DN Δ	Viscosity for Loads Up To 18% of Dyn. Cap.* (SUS @ Oper. Temp.)	CST	DN Δ	Viscosity for Loads Up To 18% of Dyn. Cap.* (SUS. @ Oper. Temp.)	CST
100	3500	700	1400	625	140
200	3150	680	1600	525	120
300	2750	590	1800	450	95
400	2375	500	2000	400	85
500	2000	460	3000	300	63
600	1750	360	4000	200	43
700	1500	320	5000	150	32
800	1300	280	6000	130	28
900	1075	220	7000	110	22
1000	900	140	8000	100	20

Δ DN = Bore Diameter (ins) x RPM

* For loads above 18% of dynamic capacity, an EP grease with viscosity selected from above is recommended



UNIFIED SAF Bearing Lubrication

OIL LUBRICATION

DODGE UNIFIED bearings are designed to accept oil lubrication. Oil lubrication is normally required at high speeds as well as high loads, or whenever heat from an external source is flowing into the bearing. Oil lubrication may be static or circulating. With static oil, fill the bearing cavity with oil up to the center line of the lowest roller. This height is identified as W and is shown on pages B15-22, B15-23, B15-37, B15-39, B15-63, B15-97, B15-105, and B15-117.Mount an oil sight gauge in the drilled and tapped hole on the side of the pillow block for visual indication of this level. The oil level may drop or rise during operation depending on the direction of rotation of the bearing. Both the static oil level and the running oil level should be marked on the oil sight gauge and properly identified. Oil should be replaced at least semiannually. For circulating oil, the oil flow rate and size of factory drilled and tapped return drains are shown in Table 5, up to 8 bore. The viscosity of the oil should be selected based on the guidelines shown on Table 3, page B15-20. If the RPM of the application is within the specifications of this catalog, and if the temperature of the bearings is 80°F to 100°F or greater above ambient, a lighter viscosity oil may be required.

Table 4: Re-Greasing Intervals, Months*, Based On 12 Hours Per Day, 150-F Max.

Shaft Size		RPM								
Adapter Mtg. (in.)	Direct Mtg. (mm)	250	500	750	1000	1250	1500	2000	2500	3000
1-7/16 - 1-15/16	40-55	8	6	4	3	2	1	.50	.50	.25
2-3/16	60-65	7	5	3	2	1	1	.50	.25	.25
2-7/16 - 3	70-85	6	4	3	2	1	.50	.25	.25	
3-3/16 - 3-1/2	90-100	5	3	2	1	.50	.50	.25		
3-15/16 - 4-1/2	110-130	4	3	2	1	.50	.25			
4-15/16 - 5-1/2	140-160	3	2	1	.50	.25				
5-15/16 - 7-3/16	170-200	2	1	1	.50					
7-1/2 - 9-1/2	220	1	1	.50						
9-15/16 - 10-1/2	-	1	.50							
10-15/16 - 12-1/2	-	1	.50							
12-15/16 - 15-3/4	-	.50	.25							

* For continuous operations, 24 hours per day, decrease greasing interval by 50%

SELECTION



UNIFIED SAF Circulating Oil

Table 5: Circulating Oil Flow Rates, Drain Hole Sizes, Thermocouple Location And Vibration Sensor Location

Shaft Size				USAF Housing Designation				Circulating Oil Flow*		Static Oil Level Inches W**		Drain Hole, Dry Sump ***			Thermocouple Hole		Vibration ▲ Sensor Hole	
								Amount Sufficient for Normal Lubrication	Maximum Amount for Heat Dissipation Due to External Heat Source			Location Inches			Location Inches	Wall Thck. Inches	Location Inches	Wall Thck. Inches
500 Adptr Mntg. Inches	200 Drct. Mntg. mm	600 Adptr. Mntg. Inches	300 Drct. Mntg. mm					Gal./Min	Gal./Min	500 & 200 Series	600 & 300 Series	X	Y	Size	A	B	C	E
1-7/16	-	-	-	509	-	-	-	.0025	.070	0.92	-	1.09	0.63	1-8/27	0.25	0.38	1.56	1.31
1-11/16	-	-	40	510	-	-	308	.0030	.090	1.09	1.19	1.35	1.18	1-8/27	0.27	0.30	1.14	0.97
1-15/16	-	1-7/16	45	511	-	609	309	.0040	.100	1.16	1.28	1.31	0.83	1-8/27	0.28	0.53	1.89	1.13
-	-	1-11/16	50	-	-	610	310	.0045	.120	-	1.38							
2-3/16	-	1-15/16	55	513	-	611	311	.0050	.150	1.11	1.44	1.66	0.78	1-8/27	0.34	0.58	2.02	1.13
2-7/16 2-1/2	75	-	60	515	215	-	312	.0060	.175	1.16	1.31	1.78	0.88	1/4-18	0.36	0.63	2.25	1.19
2-11/16 2-3/4	80	2-3/16	65	516	216	613	313	.0065	.195	1.25	1.41	1.97	0.95	1/4-18	0.31	0.50	2.28	1.52
2-15/16 3	85	-	70	517	217	-	314	.0075	.200	1.38	1.47	2.13	1.06	3/8-18	0.41	0.67	2.50	1.44
3-3/16	90	2-7/16 2-1/2	75	518	218	615	315	.0080	.250	1.47	1.59	2.25	1.13	3/8-18	0.44	0.61	2.72	1.45
-	-	2-11/16 2-3/4	80	-	-	616	316	.0100	.260	1.69	1.69	2.28	1.17	3/8-18	0.53	0.66	2.73	1.47
3-7/16 3-1/2	100	2-15/16 3	85	520	220	617	317	.0110	.350	1.64	1.75	2.63	1.25	3/8-18	0.53	0.70	3.08	1.67

* Based on oil temperature of 130ºF - 150ºF & oil level at center line of lowest roller. For maximum oil flow values, both drains should be used.
Mount block with drain holes on right side of block center line when rotation is CCW, unless cast closed end.
Mount block with drain holes on left side of block center line when rotation is CW.

** Static oil level is measured from bottom of block base to meniscus on oil sight gauge. (Non-rotating mode)

*** For wet sump, consult DODGE Application Engineering.

▲ For vibration sensors supplied by the user.

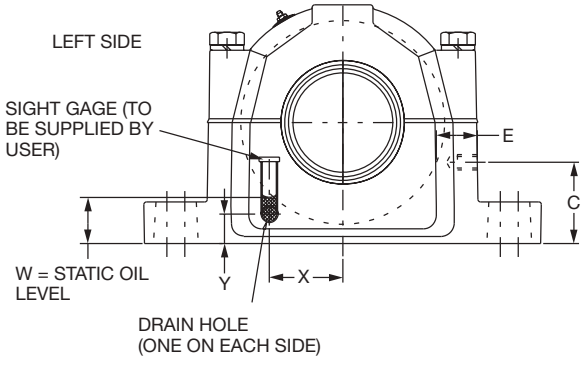

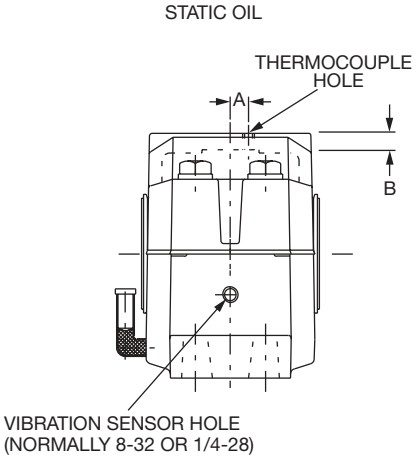

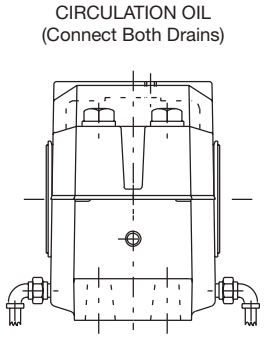



UNIFIED SAF Circulating Oil

Table 5 (continued): Circulating Oil Flow Rates, Drain Hole Sizes, Thermocouple Location And Vibration Sensor Location

Shaft Size				USAF Housing Designation				Circulating Oil Flow*		Static Oil Level Inches W**		Drain Hole, Dry Sump ***			Thermocouple Hole		Vibration ▲ Sensor Hole	
500 Adptr Mntg. Inches	200 Drct. Mntg. mm	600 Adptr. Mntg. Inches	300 Drct. Mntg. mm					Amount Suf-ficient for Normal Lubrication	Maximum Amount for Heat Dissipation Due to External Heat Source	500 & 200 Series	600 & 300 Series	Location Inches			Location Inches	Wall Thck. Inches	Location Inches	Wall Thck. Inches
								Gal./Min	Gal./Min			X	Y	Size	A	B	C	E
3-15/16 4	110	-	-	522	222	-	-	0.015	0.42	1.80		2.88	1.34	3/8-18	0.53	0.53	3.36	1.72
4-3/16	120	3-7/16 3-1/2	100	524	224	620	320	0.0175	0.48	1.84	2.03	2.19	1.38	1/2-14	0.69	0.77	3.38	1.86
4-7/16 4-1/2	130	3-15/16 4	110	526	226	622	322	0.019	0.55	2.34	2.41	2.31	1.63	1/2-14	0.75	1.00	4.03	2.16
4-15/16 5	140	-	-	528	228	-	-	0.023	0.6	2.03	-	3.68	1.47	1/2-14	0.75	0.89	4.03	2.16
5-3/16	150	4-3/16	120	530	230	624	324	0.025	0.75	2.03	2.38	3.59	1.36	1/2-14	0.81	0.88	4.34	2.25
5-7/16 5-1/2	160	4-7/16 4-1/2	130	532	232	626	326	0.03	0.8	2.09	2.44	4.03	1.33	1/2-14	0.91	0.92	4.52	2.22
5-15/16 6	170	4-15/16 5	140	534	234	628	328	0.035	0.85	2.19	2.56	4.16	1.33	1/2-14	1.00	1.39	4.97	2.70
6-7/16 6-1/2	180	5-3/16	150	536	236	630	330	0.037	0.875	2.42	2.63	4.22	1.63	1/2-14	1.00	1.33	5.25	2.75
6-15/16 7	190	5-7/16 5-1/2	160	538	238	632	332	0.039	1	2.53	2.69	4.75	1.61	1/2-14	1.13	1.25	5.50	2.75
7-3/16	200	5-15/16 6	170	540	240	634	334	0.042	1	2.47	2.75	4.91	1.53	1/2-14	1.13	1.25	5.81	2.84
7-1/2	220	6-15/16 7	190	544S	244	638	338	0.05	1.4	3.25	2.38	5.44	2.03	1/2-14	1.19	1.50	6.63	2.36
7-15/16 8		-		544														

* Based on oil temperature of 130°F - 150°F & oil level at center line of lowest roller. For maximum oil flow values, both drains should be used.
Mount block with drain holes on right side of block center line when rotation is CCW, unless cast closed end.
Mount block with drain holes on left side of block center line when rotation is CW.

** Static oil level is measured from bottom of block base to meniscus on oil sight gauge. (Non-rotating mode)

*** For wet sump, consult DODGE Application Engineering.

▲ For vibration sensors supplied by the user.

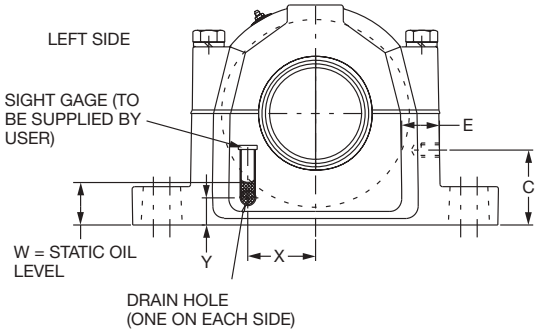

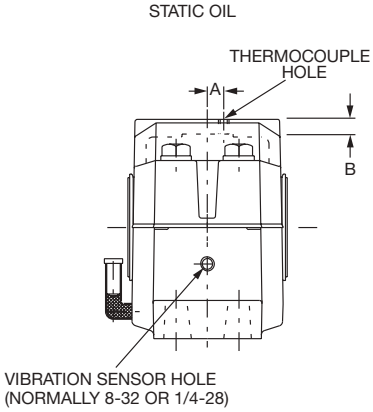

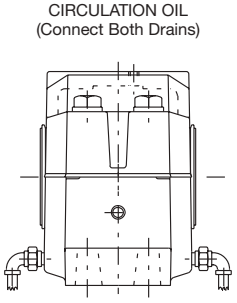

FEATURES/BENEFITS PAGE B15-3	SPECIFICATION/HOW TO ORDER PAGE B15-7	NOMENCLATURE PAGE B15-8	SELECTION/DIMENSIONS PAGE B15-26

SELECTION

UNIFIED SAF Housing Ratings

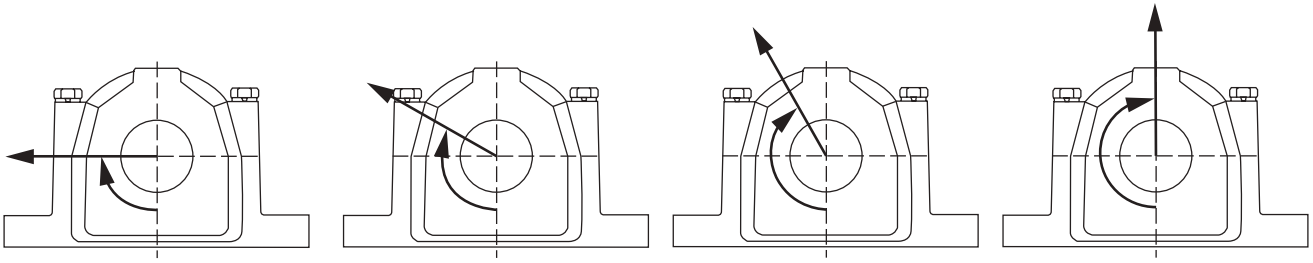

P90° P120° P150° P180°

Table 6: USAF Housing Ratings And Cap Bolt Ratings*

Pillow Block Designation				Recommended Housing Cap Loads ♦				Recommended Cap Bolt Loads			Cap Bolt Information ♦		
USAF	USAF	USAF	USAF	P90 lb.	P120 lb.	P150 lb.	P180 lb.	P120 lb.	P150 lb.	P180 lb.	Cap Bolt (No.) Size	Torque (Ft-Lb)	SAE Grade
509				6600	4200	3600	4600	19800	11300	9900	(4) 3/8-16	24-30	5
510			308	7800	5000	4400	5400	19800	11300	9900	(4) 3/8-16	24-30	5
511		610	310	11400	7165	6575	7875	27120	15600	13560	(4)7/16-14	40-50	5
513		611	311	13360	8260	7680	9200	27120	15600	13560	(4) 7/16-14	40-50	5
515	215		312	13360	8260	7680	9220	36200	20800	18100	(4) 1/2-13	60-75	5
516	216	613	313	12800	8000	7400	8900	57600	33000	28800	(4) 5/8-11	120-150	5
517	217		314	13600	9200	8400	10200	57600	33000	28800	(4) 5/8-11	120-150	5
518	218	615	315	17500	11350	10200	12100	57600	33000	28800	(4) 5/8-11	120-150	5
		616	316	17600	12000	10500	12200	57600	33000	28800	(4) 5/8-11	120-150	5
520	220	617	317	22500	14200	12660	14700	85200	48900	42600	(4) 3/4-10	208-260	5
522	222			28100	17500	15500	17800	85200	48900	42600	(4) 3/4-10	208-260	5
524	224	620	320	24500	15400	13700	15800	85200	48900	42600	(4) 3/4-10	208-260	5
526	226	622	322	28970	18000	15900	18300	11800	67800	59000	(4) 7/8-9	320-430	5
528	228			35800	22100	19400	22300	154400	88700	77200	(4) 1-8	512-640	5
530	230	624	324	40000	24700	21600	25000	154400	88700	77200	(4) 1-8	512-640	5
532	232	626	326	40200	24800	21700	25100	154400	88700	77200	(4) 1-8	512-640	5
534	234	628	328	52000	32200	28200	33000	154400	88700	77200	(4) 1-8	512-640	5
536	236	630	330	78200	49200	43300	52800	154400	88700	77200	(4) 1-8	512-640	5
538	238	632	332	80600	50800	44800	54800	215200	123000	107600	(4) 1-1/4-7	896-1120	5
540	240	634	334	83800	53000	46700	57500	215200	123000	107600	(4) 1-1/4-7	896-1120	5
544	244	638	338	101800	65600	58200	73800	312000	179000	156000	(4) 1-1/2-6	1560-1950	5
048				83800	53000	46700	54800	215200	123000	107600	(4) 1-1/4-7	896-1120	5
052				101800	65600	58200	73800	312000	179000	156000	(4) 1-1/2-6	1560-1950	5
056				110200	71800	64000	82100	312000	179000	156000	(4) 1-1/2-6	1560-1950	5

* When utilizing heavy cap loads an pillow block housings, the installation must adhere to the following procedures.

1) The pillow block base bolts must have high strength (Grade 8) bolts and be properly tightened to mounting structure.

2) Stop bars (shear strips) must be used against the pillow block where side loads are encountered.

3) In all cases where loads are heavy, the L_{10} life of the bearing should be checked for proper selection and life requirements.

♦ For USDAF housing and Cap Bolt Ratings consult DODGE Application Engineering (864-284-5700).



UNIFIED SAF Expansion Capabilities

Table 7: UNIFIED 500, 200, 600 And 300 Series And Split-Spher Pillow Blocks Total Expansion Capability

Shaft Size				USAF Housing Designation				Total Expansion, Inches
500 Adptr. Mntg. Inches	200 Drct. Mntg. mm	600 Adptr. Mntg. Inches	300 Drct. Mntg. mm					
1-7/16	-	-	-	509	-	-	-	1/4
1-11/16	-	-	40	510	-	-	308	1/4
1-15/16	-	1-7/16	45	511	-	609	309	1/4
-	-	1-11/16	50	-	-	610	310	7/16
2-3/16	-	1-15/16	55	513	-	611*	311*	5/16
2-7/16 2-1/2	75	-	60	515	215	-	312	1/4
2-11/16 2-3/4	80	2-7/16	65	516	216	613	313	3/8
2-15/16 3	85	-	70	517	217	-	314	3/8
3-3/16	90	2-7/16 2-1/2	75	518	218	615	315	3/8
-	-	2-11/16 2-3/4	80	-	-	616	316	3/8
3-7/16 3-1/2	100	2-15/16 3	85	520	220	617	317	3/8
3-15/16, 4	110			522	222			3/8
4-3/16	120	3-7/16 3-1/2	100	524	224	620	320	3/8
4-7/16, 4-1/2	130	3-15/16, 4	110	526	226	622	322	3/8
4-15/16 5	140			528	228			3/8
5-3/16	150	4-3/16	120	530	230	624	324	3/8
5-7/16 5-1/2	160	4-7/16,4-1/2	130	532	232	626	326	3/8
5-15/16 6	170	4-15/16,5	140	534	234	628	328	3/8
6-7/16 6-1/2	180	5-3/16	150	536	236	630	330	3/8
6-15/16 7	190	5-7/16 5-1/2	160	538	238	632	332	3/8
7-3/16	200	5-15/16, 6	170	540	240	634	334	3/8
7-1/2,	220	6-15/16 7	190	544S	244	638	338	3/8
7-15/16 8		-		544				
8-7/16, 8-1/2 8-15/16, 9	-	-	-	048	-	-	-	5/8
9-7/16, 9-1/2	-	-	-	052	-	-	-	9/16
9-15/16, 10	-	-	-	056	-	-	-	1-5/8
10-7/16 10-1/2	-	-	-	056L	-	-	-	1-5/8

* 1/4 Total Expansion

FEATURES/BENEFITS PAGE B15-3	SPECIFICATION/HOW TO ORDER PAGE B15-7	NOMENCLATURE PAGE B15-8	SELECTION/DIMENSIONS PAGE B15-26

SELECTION/DIMENSIONS



USAF 500 Adapter Mount Pillow Block with TRIPLE-TECT Seal Assembly

500 SERIES OPEN END HOUSING

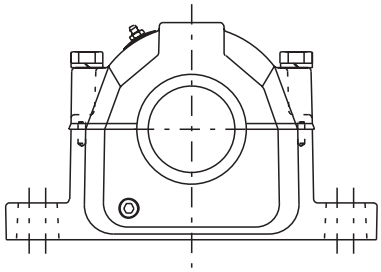

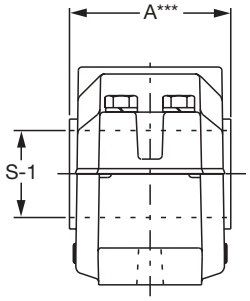

Shaft Dia S-1	Complete Pillow Block Part No.	Housing W/ Stab Ring Part No.	Bearing Part No.	Dynamic Capacity (C), lbs.	Max RPM (Grease)
1-7/16	P2B509-USAF-107TT 043015	H2S-509-USAF 043995	BRG22209KC3 422134	24,500	5,600
1-11/16	P2B510-USAF-111TT 043048	H2S-510-USAF 043996	BRG22210KC3 422137	26,000	5,300
1-15/16	P2B511-USAF-115TT 043248	H2S-511-USAF 043997	BRG22211KC3 422123	31,500	4,500
2-3/16	P2B513-USAF-203TT 043249	H2S-513-USAF 043998	BRG22213KC3 422124	45,500	3,800
	P4B513-USAF-203TT 039579	H4S-513-USAF 039669	BRG22213KC3 422124		
2-7/16	P2B515-USAF-207TT 041860	H2S-515-USAF 044000	BRG22215KC3 422001	48,000	3,400
	P4B515-USAF-207TT 041861	H4S-515-USAF 044003	BRG22215KC3 422001		
2-1/2	P2B515-USAF-208TT 041862	H2S-515-USAF 044000	BRG22215KC3 422001	48,000	3,400
	P4B515-USAF-208TT 041863	H4S-515-USAF 044003	BRG22215KC3 422001		
2-11/16	P2B516-USAF-211TT 042406	H2S-516-USAF 044198	BRG22216KC3 422003	56,000	3,200
	P4B516-USAF-211TT 044015	H4S-516-USAF 044007	BRG22216KC3 422003		
2-3/4	P2B516-USAF-212TT 042409	H2S-516-USAF 044198	BRG22216KC3 422003	56,000	3,200
	P4B516-USAF-212TT 042423	H4S-516-USAF 044007	BRG22216KC3 422003		
2-15/16	P2B517-USAF-215TT 041864	H2S-517-USAF 044010	BRG22217KC3 422005	68,000	3,000
	P4B517-USAF-215TT 041865	H4S-517-USAF 044013	BRG22217KC3 422005		
3	P2B517-USAF-300TT 041866	H2S-517-USAF 044010	BRG22217KC3 422005	68,000	3,000
	P4B517-USAF-300TT 041867	H4S-517-USAF 044013	BRG22217KC3 422005		
3-3/16	P2B518-USAF-303TT 042422	H2S-518-USAF 044199	BRG22218KC3 422007	78,000	2,600
	P4B518-USAF-303TT 044115	H4S-518-USAF 044114	BRG22218KC3 422007		

DODGE



USAF 500 Adapter Mount Pillow Block with TRIPLE-TECT Seal Assembly

500 SERIES OPEN END HOUSING

Shaft Dia S-1	SNW Part No.	TRIPLE-TECT Part No.	TTDN Part No.	#LER Part No.	Aux Part No.	End Cover Part No.
1-7/16	H309-SNW-107 046350	08TT107 043578	---	08LER107 042193		EC08 040700
1-11/16	H310-SNW-111 046351	10TT111 043579	---	10LER111 *042199		EC10 040701
1-15/16	H311-SNW-115 046352	12TT115 043540	12TTDN115 039852	12LER115 042512	12AUX115 041687	EC12 040702
2-3/16	H313-SNW-203 046353	14TT203 043541	14TTDN203 039853	14LER203 042513	14AUX203 041688	EC14 040703
	H313-SNW-203 046353	14TT203 043541	14TTDN203 039853	14LER203 042513	14AUX203 041688	EC14 040703
2-7/16	H315-SNW-207 046354	20TT207 043542	20TTDN207 039538	20LER207 042514	20AUX207 042380	EC20 040704
	H315-SNW-207 046354	20TT207 043542	20TTDN207 039538	20LER207 042514	20AUX207 042380	EC20 040704
2-1/2	H315-SNW-208 046355	20TT208 043543	20TTDN208 039854	20LER208 042515	20AUX208 040890	EC20 040704
	H315-SNW-208 046355	20TT208 043543	20TTDN208 039854	20LER208 042515	20AUX208 040890	EC20 040704
2-11/16	H316-SNW-211 046356	24TT211 043544	24TTDN211 039855	24LER211 042516	24AUX211 042381	EC24 040705
	H316-SNW-211 046356	24TT211 043544	24TTDN211 039855	24LER211 042516	24AUX211 042381	EC24 040705
2-3/4	H316-SNW-212 046357	24TT212 043545	24TTDN212 039856	24LER212 042517	24AUX212 040891	EC24 040705
	H316-SNW-212 046357	24TT212 043545	24TTDN212 039856	24LER212 042517	24AUX212 040891	EC24 040705
2-15/16	H317-SNW-215 046358	28TT215 043546	28TTDN215 039530	28LER215 042518	28AUX215 042382	EC28 040706
	H317-SNW-215 046358	28TT215 043546	28TTDN215 039530	28LER215 042518	28AUX215 042382	EC28 040706
3	H317-SNW-300 046359	28TT300 043547	28TTDN300 039857	28LER300 042519	28AUX300 040918	EC28 040706
	H317-SNW-300 046359	28TT300 043547	28TTDN300 039857	28LER300 042519	28AUX300 040918	EC28 040706
3-3/16	H318-SNW-303 046360	34TT303 043548	34TTDN303 039858	34LER303 042520	34AUX303 040892	EC34 040707
	H318-SNW-303 046360	34TT303 043548	34TTDN303 039858	34LER303 042520	34AUX303 040892	EC34 040707

 # NOTE: LER seals are made from Aluminum unless otherwise noted by the * symbol.

If an * appears by the part number, the LER seal is manufactured from Steel.

FEATURES/BENEFITS PAGE B15-3	SPECIFICATION/HOW TO ORDER PAGE B15-7	NOMENCLATURE PAGE B15-8	SELECTION PAGE B15-13

SELECTION/DIMENSIONS



USAF 500 Adapter Mount Pillow Block with TRIPLE-TECT Seal Assembly

500 SERIES OPEN END HOUSING

Shaft Dia S-1	Complete Pillow Block Part No.	Housing W/ Stab Ring Part No.	Bearing Part No.	Dynamic Capacity (C), lbs.	Max RPM (Grease)
3-7/16	P2B520-USAF-307TT 041868	H2S-520-USAF 044020	BRG22220KC3 422009	96,500	2,200
	P4B520-USAF-307TT 041869	H4S-520-USAF 044023	BRG22220KC3 422009		
3-1/2	P2B520-USAF-308TT 041870	H2S-520-USAF 044020	BRG22220KC3 422009	96,500	2,200
	P4B520-USAF-308TT 041871	H4S-520-USAF 044023	BRG22220KC3 422009		
3-15/16	P4B522-USAF-315TT 041872	H4S-522-USAF 044025	BRG22222KC3 422011	122,000	2,000
4	P4B522-USAF-400TT 041873	H4S-522-USAF 044025	BRG22222KC3 422011	122,000	2,000
4-3/16	P4B524-USAF-403TT 042431	H4S-524-USAF 044202	BRG22224KC3 422013	143,000	1,900
4-7/16	P4B526-USAF-407TT 041874	H4S-526-USAF 044031	BRG22226KC3 422015	170,000	1,800
4-1/2	P4B526-USAF-408TT 041875	H4S-526-USAF 044031	BRG22226KC3 422015	170,000	1,800
4-15/16	P4B528-USAF-415TT 041876	H4S-528-USAF 044034	BRG22228KC3 422017	196,000	1,700
5	P4B528-USAF-500TT 041877	H4S-528-USAF 044034	BRG22228KC3 422017	196,000	1,700
5-3/16	P4B530-USAF-503TT 042438	H4S-530-USAF 044203	BRG22230KC3 422019	228,000	1,600
5-7/16	P4B532-USAF-507TT 041878	H4S-532-USAF 044040	BRG22232KC3 422021	260,000	1,500
5-1/2	P4B532-USAF-508TT 041879	H4S-532-USAF 044040	BRG22232KC3 422021	260,000	1,500
5-15/16	P4B534-USAF-515TT 041880	H4S-534-USAF 044043	BRG22234KC3 422023	300,000	1,300
6	P4B534-USAF-600TT 041881	H4S-534-USAF 044043	BRG22234KC3 422023	300,000	1,300
6-7/16	P4B536-USAF-607TT 041882	H4S-536-USAF 044046	BRG22236KC3 422025	305,000	1,300
6-1/2	P4B536-USAF-608TT 041883	H4S-536-USAF 044046	BRG22236KC3 422025	305,000	1,300
6-15/16	P4B538-USAF-615TT 041884	H4S-538-USAF 044049	BRG22238KC3 422027	270,000	1,200
7	P4B538-USAF-700TT 041885	H4S-538-USAF 044049	BRG22238KC3 422027	270,000	1,200
7-3/16	P4B540-USAF-703TT 039606	H4S-540-USAF 039681	BRG22240KC3 422064	300,000	900
7-1/2	P4B544-USAF-708TT 042445	H4S-544S-USAF 044054	BRG22244KC3 422029	365,000	950
7-15/16	P4B544-USAF-715TT 041886	H4S-544-USAF 044055	BRG22244KC3 422029	365,000	950

DODGE



USAF 500 Adapter Mount Pillow Block with TRIPLE-TECT Seal Assembly

500 SERIES OPEN END HOUSING

Shaft Dia S-1	SNW Part No.	TRIPLE-TECT Part No.	TTDN Part No.	#LER Part No.	Aux Part No.	End Cover Part No.
3-7/16	H320-SNW-307	46TT307	46TTDN307	46LER307	46AUX307	EC46
	046361	043549	039859	042521	042383	040708
	H320-SNW-307	46TT307	46TTDN307	46LER307	46AUX307	EC46
	046361	043549	039859	042521	042383	040708
3-1/2	H320-SNW-308	46TT308	46TTDN308	46LER308	46AUX308	EC46
	046362	043550	039860	042522	040919	040708
	H320-SNW-308	46TT308	46TTDN308	46LER308	46AUX308	EC46
	046362	043550	039860	042522	040919	040708
3-15/16	H322-SNW-315	50TT315	50TTDN315	50LER315	50AUX315	EC50
	046363	043551	039861	042523	042384	040709
4	H322-SNW-400	50TT400	50TTDN400	50LER400	50AUX400	EC50
	046364	043552	039862	042524	040893	040709
4-3/16	H3124-SNW-403	52TT403	52TTDN403	52LER403	52AUX403	EC52
	046430	043553	039863	042525	044360	040710
4-7/16	H3126-SNW-407	54TT407	54TTDN407	54LER407	54AUX407	EC54
	046431	043554	039864	042526	042385	040711
4-1/2	H3126-SNW-408	54TT408	54TTDN408	54LER408	54AUX408	EC54
	046432	043555	039865	042527	042386	040711
4-15/16	H3128-SNW-415	56TT415	56TTDN415	56LER415	56AUX415	EC56
	046433	043556	039866	042528	042387	040712
5	H3128-SNW-500	56TT500	56TTDN500	56LER500	56AUX500	EC562
	046434	043557	039867	042529	040894	040712
5-3/16	SNW30X503	58TT503	---	58LER503		EC58
	043618	043558		042530		040713
5-7/16	SNW32X507	60TT507	---	60LER507	60AUX507	EC60
	043619	043559		042531	042388	040714
5-1/2	SNW32X508	60TT508	---	60LER508	60AUX508	EC60
	043634	043574		042532	040895	040714
5-15/16	SNW34X515	64TT515	---	64LER515	64AUX515	EC64
	043620	043560		042533	042389	040681
6	SNW34X600	64TT600	---	64LER600	64AUX600	EC64
	043621	043561		042534	041646	040681
6-7/16	SNW36X607	68TT607	---	68LER607	68AUX607	EC68
	043622	043562	---	042535	042390	040682
6-1/2	SNW36X608	68TT608		68LER608	68AUX608	EC68
	043623	043563		042536	042391	040682
6-15/16	SNW38X615	72TT615	---	72LER615	72AUX615	EC72
	043624	043564		042537	042392	040683
7	SNW38X700	72TT700	---	72LER700	72AUX700	EC72
	043625	043565		042538	043109	040683
7-3/16	SNW40X703	74TT703	---	74LER703	74AUX703	---
	046545	046421		043386	040690	
7-1/2	SNW44X708	76TT708	---	76LER708	76AUX708	EC76
	043627	043567		042539	040896	040684
7-15/16	SNW44X715	78TT715	---	78LER715	78AUX715	EC78
	043626	043566		042540	042393*	040685

 # NOTE: LER seals are made from Aluminum unless otherwise noted by the * symbol.
If an * appears by the part number, the LER seal is manufactured from Steel.

FEATURES/BENEFITS PAGE B15-3	SPECIFICATION/HOW TO ORDER PAGE B15-7	NOMENCLATURE PAGE B15-8	SELECTION PAGE B15-13

SELECTION/DIMENSIONS



USAF 500 Adapter Mount Pillow Block with TRIPLE-TECT Seal Assembly

500 SERIES OPEN END HOUSING

Shaft Dia S-1	Complete Pillow Block Part No.	Housing W/ Stab Ring Part No.	Bearing Part No.	Dynamic Capacity (C), lbs.	Max RPM (Grease)
8	P4B544-USAF-800TT 041887	H4S-544-USAF 044055	BRG22244KC3 422029	365,000	950
8-7/16	P4B048-USAF-807TT 042447	H4S-048-USAF 044200	BRG23048KC3 422031	260,000	950
8-1/2	P4B048-USAF-808TT 042448	H4S-048-USAF 044200	BRG23048KC3 422031	260,000	950
8-15/16	P4B048-USAF-815TT 042449	H4S-048-USAF 044200	BRG23048KC3 422031	260,000	950
9	P4B048-USAF-900TT 042453	H4S-048-USAF 044200	BRG23048KC3 422031	260,000	950
9-7/16	P4B052-USAF-907TT 042454	H4S-052-USAF 422542	BRG23052KC3 422543	340,000	900
9-1/2	P4B052-USAF-908TT 422544	H4S-052-USAF 422542	BRG23052KC3 422543	340,000	900
9-15/16	P4B056-USAF-915TT 042458	H4S-056-USAF 422560	BRG23056KC3 422030	345,000	850
10	P4B056-USAF-1000TT 041628	H4S-056-USAF 422560	BRG23056KC3 422030	345,000	850
10-7/16	P4B056-USAF-1007TT 042463	H4S-056L-USAF 044201	BRG23056KC3 422030	345,000	850
10-1/2	P4B056-USAF-1008TT 042464	H4S-056L-USAF 044201	BRG23056KC3 422030	345,000	850



USAF 500 Adapter Mount Pillow Block with TRIPLE-TECT Seal Assembly

500 SERIES OPEN END HOUSING

Shaft Dia S-1	SNW Part No.	TRIPLE-TECT Part No.	TTDN Part No.	#LER Part No.	Aux Part No.	End Cover Part No.
8	SNW44X800 043628	78TT800 043568	---	78LER800 042541*	78AUX800 042394*	EC78 040685
8-7/16	SNP3048X807 043629	90TT807 043569	---	90LER807 042542*	90AUX807 040897*	EC90 042368
8-1/2	SNP3048X808 043630	90TT808 043570	---	90LER808 042543*	90AUX808 040898*	EC90 042368
8-15/16	SNP3048X815 043631	90TT815 043571	---	90LER815 042544*		EC90 042368
9	SNP3048X900 043632	90TT900 043572	---	90LER900 042545*	90AUX900 040995*	EC90 042368
9-7/16	SNP3052X907 043585	84TT907 043538	---	84LER907 042510*	84AUX907 040900*	EC84 422606
9-1/2	SNP3052X908 422538	84TT908 422545	---	84LER908 422594	84AUX908 040901*	EC84 422606
9-15/16	SNP3056X915 043586	92TT915 043575	---	92LER915 042511*		EC92 042369
10	SNP3056X1000 043633	92TT1000 043573	---	92LER1000 041082*	92AUX1000 042395*	EC92 042369
10-7/16	SNP3056X1007 043580	94TT1007 047940	---	94LER1007 042036*		EC94 040689
10-1/2	SNP3056X1008 422567	94TT1008 047941	---	94LER1008 422573*	94AUX1008 042396*	EC94 040689

 # NOTE: LER seals are made from Aluminum unless otherwise noted by the * symbol.

If an * appears by the part number, the LER seal is manufactured from Steel.

Bearing Reference Guide
E-Family Roller Bearings
Specialty Tapered Products
S-2000
UNISPHERE II
IMPERIAL
UNIFIED SAF

SELECTION/DIMENSIONS

DODGE



USAF 500 Adapter Mount Pillow Block with TRIPLE-TECT Seal Assembly

500 SERIES CAST CLOSED HOUSING

Shaft Dia S-1	Complete Pillow Block Part No.	Housing Part No.**	Bearing Part No.	Dynamic Capacity (C), lbs.	Max RPM (Grease)	SNW Part No.	1-7/16" - 4-15/16" Seals			
							TRIPLE-TECT Part No.	Drop In TRIPLE-TECT Part No.	# LER Part No.	Aux Taconite Part No.
1-7/16	CP2B509-USAF-107TT 039575	CH2S-509-USAF 039665	BRG22209KC3 422134	24,500	5,600	H309-SNW-107 046350	08TT107 043578	---	08LER107 042193	
1-11/16	CP2B510--USAF-111TT 039576	CH2S-510-USAF 039666	BRG22210KC3 422137	26,000	5,300	H310-SNW-111 046351	10TT111 043579	---	10LER111 042199	
1-15/16	CP2B511-USAF-115TT 039577	CH2S-511-USAF 039667	BRG22211KC3 422123	31,500	4,500	H311-SNW-115 046352	12TT115 043540	12TTDN115 039852	12LER115 042512	12AUX115 041687
2-3/16	CP2B513-USAF-203TT 039578	CH2S-513-USAF 039668	BRG22213KC3 422124	45,500	3,800	H313-SNW-203 046353	14TT203 043541	14TTDN203 039853	14LER203 042513	14AUX203 041688
	CP4B513-USAF-203TT 039580	CH4S-513-USAF 039670	BRG22213KC3 422124	45,500	3,800	H313-SNW-203 046353	14TT203 043541	14TTDN203 039853	14LER203 042513	14AUX203 041688
2-7/16	CP2B515-USAF-207TT 039581	CH2S-515-USAF 039544	BRG22215KC3 422001	48,000	3,400	H315-SNW-207 046354	20TT207 043542	20TTDN207 039538	20LER207 042514	20AUX207 042380
	CP4B515-USAF-207TT 039582	CH4S-515-USAF 039545	BRG22215KC3 422001	48,000	3,400	H315-SNW-207 046354	20TT207 043542	20TTDN207 039538	20LER207 042514	20AUX207 042380
2-1/2	CP2B515-USAF-208TT 039583	CH2S-515-USAF 039544	BRG22215KC3 422001	48,000	3,400	H315-SNW-208 046355	20TT208 043543	20TTDN208 039854	20LER208 042515	20AUX208 040890
	CP4B515-USAF-208TT 039584	CH4S-515-USAF 039545	BRG22215KC3 422001	48,000	3,400	H315-SNW-208 046355	20TT208 043543	20TTDN208 039854	20LER208 042515	20AUX208 040890
2-11/16	CP2B516-USAF-211TT 039585	CH2S-516-USAF 039671	BRG22216KC3 422003	56,000	3,200	H316-SNW-211 046356	24TT211 043544	24TTDN211 039855	24LER211 042516	24AUX211 042381
	CP4B516-USAF-211TT 039586	CH4S-516-USAF 039672	BRG22216KC3 422003	56,000	3,200	H316-SNW-211 046356	24TT211 043544	24TTDN211 039855	24LER211 042516	24AUX211 042381
2-3/4	CP2B516-USAF-212TT 039587	CH2S-516-USAF 039671	BRG22216KC3 422003	56,000	3,200	H316-SNW-212 046357	24TT212 043545	24TTDN212 039856	24LER212 042517	24AUX212 040891
	CP4B516-USAF-212TT 039588	CH4S-516-USAF 039672	BRG22216KC3 422003	56,000	3,200	H316-SNW-212 046357	24TT212 043545	24TTDN212 039856	24LER212 042517	24AUX212 040891
2-15/16	CP2B517-USAF-215TT 039589	CH2S-517-USAF 039508	BRG22217KC3 422005	68,000	3,000	H317-SNW-215 046358	28TT215 043546	28TTDN215 039530	28LER215 042518	28AUX215 042382
	CP4B517-USAF-215TT 039590	CH4S-517-USAF 039509	BRG22217KC3 422005	68,000	3,000	H317-SNW-215 046358	28TT215 043546	28TTDN215 039530	28LER215 042518	28AUX215 042382
3	CP2B517-USAF-300TT 039591	CH2S-517-USAF 039508	BRG22217KC3 422005	68,000	3,000	H317-SNW-300 046359	28TT300 043547	28TTDN300 039857	28LER300 042519	28AUX300 040918
	CP4B517-USAF-300TT 039592	CH4S-517-USAF 039509	BRG22217KC3 422005	68,000	3,000	H317-SNW-300 046359	28TT300 043547	28TTDN300 039857	28LER300 042519	28AUX300 040918
3-3/16	CP2B518-USAF-303TT 039593	CH2S-518-USAF 039673	BRG22218KC3 422007	78,000	2,600	H318-SNW-303 046360	34TT303 043548	34TTDN303 039858	34LER303 042520	34AUX303 040892
	CP4B518-USAF-303TT 039594	CH4S-518-USAF 039674	BRG22218KC3 422007	78,000	2,600	H318-SNW-303 046360	34TT303 043548	34TTDN303 039858	34LER303 042520	34AUX303 040892
3-7/16	CP2B520-USAF-307TT 039595	CH2S-520-USAF 039675	BRG22220KC3 422009	96,500	2,200	H320-SNW-307 046361	46TT307 043549	46TTDN307 039859	46LER307 042521	46AUX307 042383
	CP4B520-USAF-307TT 039596	CH4S-520-USAF 039676	BRG22220KC3 422009	96,500	2,200	H320-SNW-307 046361	46TT307 043549	46TTDN307 039859	46LER307 042521	46AUX307 042383

Note: LER seals are made from Aluminum unless otherwise noted by the * symbol.

If an * appears by the part number, the LER seal is manufactured from Steel.

DODGE



USAF 500 Adapter Mount Pillow Block with TRIPLE-TECT Seal Assembly

500 SERIES CAST CLOSED HOUSING

Shaft Dia S-1	Complete Pillow Block Part No.	Housing Part No.**	Bearing Part No.	Dynamic Capacity (C) Lbs.	Max RPM Ler (Grease)	Snw Part No.	5"- 10-1/2" Seals			
							Triple Tect Part No.	Drop In Triple Tect Part No.	# Ler Part No.	Aux Taconite Part No.
3-1/2	CP2B520-USAF-308TT 039597	CH2S-520-USAF 039675	BRG22220KC3 422009	96,500	2,200	H320-SNW-308 046362	46TT308 043550	46TTDN308 039860	46LER308 042522	46AUX308 040919
	CP4B520-USAF-308TT 039598	CH4S-520-USAF 039676	BRG22220KC3 422009	96,500	2,200	H320-SNW-308 046362	46TT308 043550	46TTDN308 039860	46LER308 042522	46AUX308 040919
3-15/16	CP4B522-USAF-305TT 039599	CH4S-522-USAF 039677	BRG22222KC3 422011	122,000	2,000	H322-SNW-315 046363	50TT315 043551	50TTDN315 039861	50LER315 042523	50AUX315 042384
4	CP4B522-USAF-400TT 039600	CH4S-522-USAF 039677	BRG22222KC3 422011	122,000	2,000	H322-SNW-400 046364	50TT400 043552	50TTDN400 039862	50LER400 042524	50AUX400 040893
4-3-16	CP4B524-USAF-403TT 039601	CH4S-524-USAF 039678	BRG22224KC3 422013	143,000	1,900	H3124-SNW-403 046430	52TT403 043553	52TTDN403 039863	52LER403 042525	52AUX403 044360
4-7/16	CP4B526-USAF-407TT 039602	CH4S-526-USAF 039679	BRG22226KC3 422015	170,000	1,800	H3126-SNW-407 046431	54TT407 043554	54TTDN407 039864	54LER407 042526	54AUX407 042385
4-1/2	CP4B526-USAF-408TT 039603	CH4S-526-USAF 039679	BRG22226KC3 422015	170,000	1,800	H3126-SNW-408 046432	54TT408 043555	54TTDN408 039865	54LER408 042527	54AUX408 042386
4-15/16	CP4B528-USAF-415TT 039604	CH4S-528-USAF 039680	BRG22228KC3 422017	196,000	1,700	H3128-SNW-415 046433	56TT415 043556	56TTDN415 039866	56LER415 042528	56AUX415 042387
5	CP4B528-USAF-500TT 039605	CH4S-528-USAF 039680	BRG22228KC3 422017	196,000	1,700	H3128-SNW-500 046434	56TT500 043557	56TTDN500 039867	56LER500 042529	56AUX500 040894
5-3/16	CP4B530-USAF-503TT 039138	CH4S-530-USAF 039217	BRG2223KC3 422019	228,000	1,600	SNW30X503 043618	58TT503 043558	---	58LER503 042530	
5-7/16	CP4B532-USAF-507TT 039141	CH4S-532-USAF 039218	BRG22232KC3 422021	260,000	1,500	SNW32X507 043619	60TT507 043559	---	60LER507 042531	60AUX507
5-1/2	CP4B532-USAF-508TT 039142	CH4S-532-USAF 039218	BRG22232KC3 422021	260,000	1,500	SNW32X508 043634	60TT508 043574	---	60LER508 042532	60AUX508 040895
5-15/16	CP4B534-USAF-515TT 039147	CH4S-534-USAF 039219	BRG22234KC3 422023	300,000	1,300	SNW34X515 043620	64TT515 043560	---	64LER515 042533	64AUX515 042389
6	CP4B534-USAF-600TT 039148	CH4S-534-USAF 039219	BRG22234KC3 422023	300,000	1,300	SNW34X600 043621	64TT600 043561	---	64LER600 042534	64AUX600 041646
6-7/16	CP4B536-USAF-607TT 039151	CH4S-536-USAF 039220	BRG22236KC3 422025	305,000	1,300	SNW36X607 043622	68TT607 042562	---	68LER607 042535	68AUX607 042390
6-1/2	CP4B536-USAF-608TT 039152	CH4S-536-USAF 039220	BRG22236KC3 422025	305,000	1,300	SNW36X608 043623	68TT608 043563	---	68LER608 042536	68AUX608 042391
6-15/16	CP4B538-USAF-615TT 039155	CH4S-538-USAF 039221	BRG22238KC3 422027	270,000	1,200	SNW38X615 043624	72TT615 043564	---	72LER615 042537	72AUX615 042392
7	CP4B538-USAF-700TT 039156	CH4S-538-USAF 039221	BRG22238KC3 422027	270,000	1,200	SNW38X700 043625	72TT700 043565	---	72LER700 042538	72AUX700 043109
7-3/16	CP4B540-USAF-703TT 039159	CH4S-540-USAF 039222	BRG22240KC3 422064	300,000	900	SNW40X703 046545	74TT703 046421	---	74LER703 043386	74AUX703 040690
7-1/2	CP4B544-USAF-708TT 039160	CH4S-544S-USAF 039223	BRG22244KC3 422029	365,000	950	SNW44X708 043627	76TT708 043567	---	76LER708 042539	76AUX708 040896
7-15/16	CP4B544-USAF-715TT 039163	CH4S-544-USAF 039224	BRG22244KC3 422029	365,000	950	SNW44X715 043626	78TT715 043566	---	78LER715 042540	78AUX715 042393*

 # NOTE: LER seals are made from aluminum unless otherwise noted by the * symbol.

If an * appears by the part number, the LER seal is manufactured from steel.

FEATURES/BENEFITS PAGE B15-3	SPECIFICATION/HOW TO ORDER PAGE B15-7	NOMENCLATURE PAGE B15-8	SELECTION PAGE B15-13

SELECTION/DIMENSIONS



USAF 500 Adapter Mount Pillow Block with TRIPLE-TECT Seal Assembly

500 SERIES CAST CLOSED HOUSING

Shaft Dia S-1	Complete Pillow Block Part No.	Housing Part No.**	Bearing Part No.	Dynamic Capacity (C) Lbs.	Max RPM LER (Grease)	SNW Part No.	5"- 10-1/2" Seals			
							Triple Tect Part No.	Drop In Triple Tect Part No.	# LER Part No.	Aux Taconite Part No.
8	**CP4B544-USAF-800TT 039164**	**CH4S-544-USAF 039224**	**BRG22244KC3 422029**	365,000	950	SNW44X800 043628	**78TT800 043568**	---	**78LER800 042541***	**78AUX800 042394***
8-7/16	**CP4B048-USAF-807TT 039165**	**CH4S-048-USAF 039225**	**BRG23048KC3 422031**	260,000	800	SNP3048X807 043629	**90TT807 043569**	---	**90LER807 042542***	**90AUX807 040897***
8-1/2	**CP4B048-USAF-808TT 039166**	**CH4S-048-USAF 039225**	**BRG23048KC3 422031**	260,000	800	SNP3048X808 043630	**90TT808 043570**	---	**90LER808 042543***	**90AUX808 040898***
8-15/16	**CP4B048-USAF-815TT 039167**	**CH4S-048-USAF 039225**	**BRG23048KC3 422031**	260,000	800	SNP3048X815 043631	**90TT815 043571**	---	**90LER815 042544***	
9	**CP4B048-USAF-900TT 039168**	**CH4S-048-USAF 039225**	**BRG23048KC3 422031**	260,000	800	SNP3048X900 043632	**90TT900 043572**	---	**90LER900 042545***	**90AUX900 040995***
9-7/16	**CP4B052-USAF-907TT 039169**	**CH4S-052-USAF 039226**	**BRG23052KC3 422543**	340,000	750	SNP3052X907 043585	**84TT907 043538**	---	**84LER907 042510***	**84AUX907 040900***
9-1/2	**CP4B052-USAF-908TT 039170**	**CH4S-052-USAF 039226**	**BRG23052KC3 422543**	340,000	750	SNP3052X908 422538	**84TT908 422545**	---	**84LER908 042594***	**84AUX908 040901***
9-15/16	**CP4B056-USAF-915TT 039171**	**CH4S-056-USAF 039227**	**BRG23056KC3 422030**	345,000	700	SNP3056X915 043586	**92TT915 043575**	---	**92LER915 042511***	
10	**CP4B056-USAF-1000TT 039172**	**CH4S-056-USAF 039227**	**BRG23056KC3 422030**	345,000	700	SNP3056X1000 043633	**92TT1000 043573**	---	**92LER1000 041082***	**92AUX1000 042395***
10-7/16	**CP4B056-USAF-1007TT 039173**	**CH4S-056L-USAF 039228**	**BRG23056KC3 422030**	345,000	700	SNP3056X1007 043580	**94TT1007 047940**	---	**94LER1007 042036***	
10-1/2	**CP4B056-USAF-1008TT 039174**	**CH4S-056L-USAF 039228**	**BRG23056KC3 422030**	345,000	700	SNP3056X1008 422567	**94TT1008 047941**	---	**94LER1008 422573***	**94AUX1008 042396***

 # NOTE: LER seals are made from aluminum unless otherwise noted by the * symbol.

If an * appears by the part number, the LER seal is manufactured from steel.

DODGE



USAF 500 Adapter Mount Pillow Block Housing

S-1 Shaft Size (Inch)	Housing	500 Housing †							
		Thru Housing				Closed End Housing			
		2-Bolt		4-Bolt		2-Bolt		4-Bolt	
		Part No.	Appox. Wt. (Lbs)	Part No.	Approx. Wt. (Lbs)	Part No.	Appox. Wt. (Lbs)	Part No.	Appox. Wt. (Lbs)
1-7/16	509	**043995**	9.5	**-**	-	**039665**	10.0	**-**	-
1-11/16	510	**043996**	11.3	**-**	-	**039666**	12.1	**-**	-
1-15/16	511	**043997**	15.6	**039762**	22.5	**039667**	16.5	**-**	23.5
2-3/16	513	**043998**	21.4	**039669**	22.5	**039668**	22.4	**039670**	23.5
2-7/16 2-1/2	515	**044000**	24.8	**044003**	26.4	**039544**	26.6	**039545**	27.9
2-11/16 2-3/4	516	**044198**	28.0	**044007**	28.0	**039671**	29.0	**039672**	29.0
2-15/16 3	517	**044010**	34.7	**044013**	38.3	**039508**	37.0	**039509**	40.6
3-3/16	518	**044199**	36.8	**044114**	37.2	**039673**	40.7	**039674**	41.2
3-7/16 3-1/2	520	**044020**	61.2	**044023**	61.8	**039675**	65.3	**039676**	65.9
3-15/16 4	522	**-**	-	**044025**	78.9	**-**	-	**039677**	84.0
4-3/16	524	**-**	-	**044202**	90.6	**-**	-	**039678**	96.1
4-7/16 4-1/2	526	**-**	-	**044031**	121.6	**-**	-	**039679**	128.2
4-15/16 5	528	**-**	-	**044034**	152.2	**-**	-	**039680**	162.2
5-3/16	530	**-**	-	**044203**	170.5	**-**	-	**039217**	182.3
5-7/16 5-1/2	532	**-**	-	**044040**	220.1	**-**	-	**039218**	235.2
5-15/16 6	534	**-**	-	**044043**	269.9	**-**	-	**039219**	282.8
6-7/16 6-1/2	536	**-**	-	**044046**	328.5	**-**	-	**039220**	349.7
6-15/16 7	538	**-**	-	**044049**	384.7	**-**	-	**039221**	409.4
7-3/16	540	**-**	-	**039681**	393.0	**-**	-	**039222**	403.0
7-1/2	544S	**-**	-	**044054**	624.0	**-**	-	**039223**	634.0
7-15/16 8	544	**-**	-	**044055**	621.0	**-**	-	**039224**	631.0
8-7/16 8-1/2 8-15/16 9	048	**-**	-	**044200**	386.0	**-**	-	**039225**	412.2
9-7/16 9-1/2	052	**-**	-	**422542**	575.0	**-**	-	**039226**	590.4
9-15/16 10	056	**-**	-	**422560**	692.0	**-**	-	**039227**	722.6
10-7/16 10-1/2	056L	**-**	-	**044201**	690.0	**-**	-	**039228**	720.0

† Includes Stabilizing Ring(s)

FEATURES/BENEFITS PAGE B15-3	SPECIFICATION/HOW TO ORDER PAGE B15-7	NOMENCLATURE PAGE B15-8	SELECTION PAGE B15-13

SELECTION/DIMENSIONS

USAF 500 Housing Dimensions

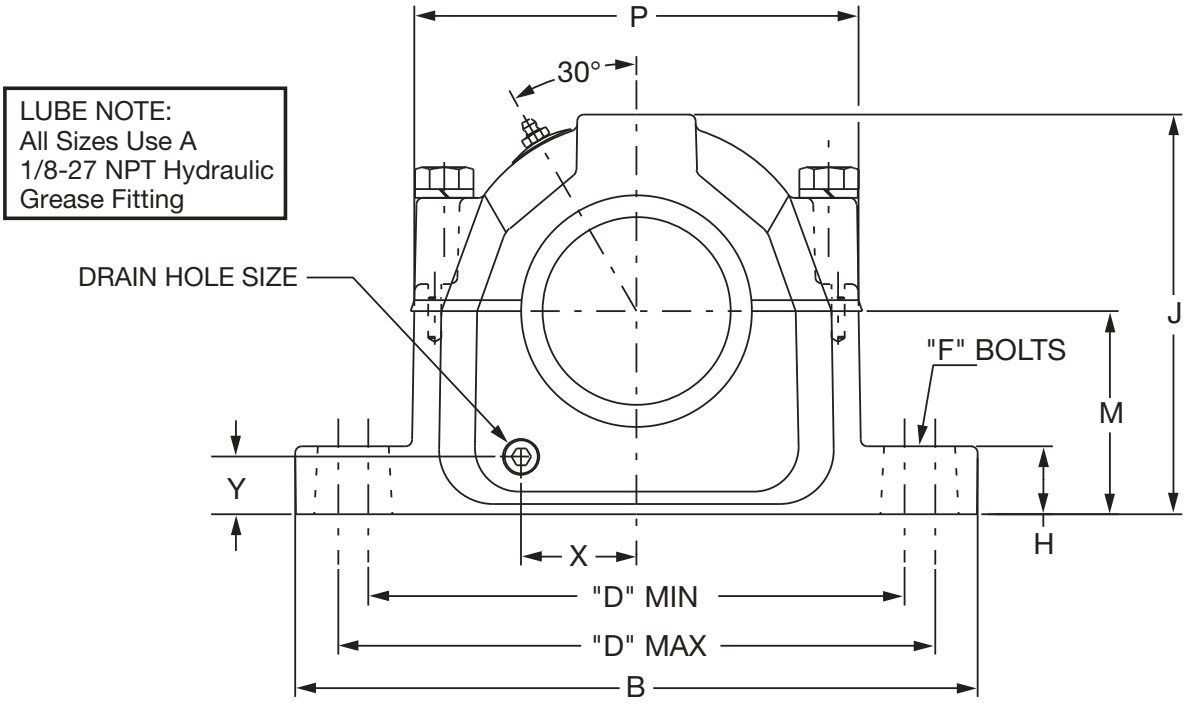

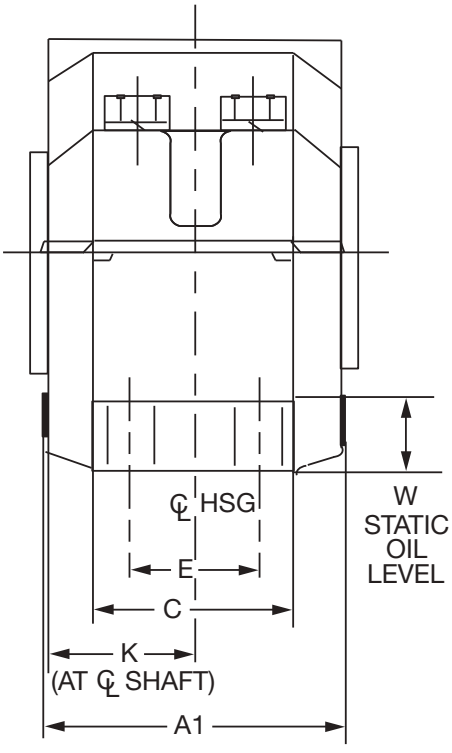

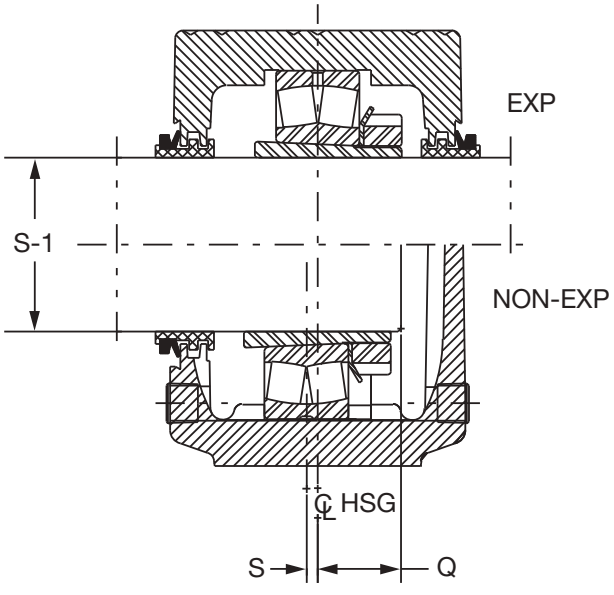

DODGE



USAF 500 Housing Dimensions

S-1 Shaft Size	Housing	A1▲	B	C	D				E	F Bolt Dia.	
					2-Bolt		4-Bolt				
					Min	Max	Min	Max		2-Bolt	4-Bolt
1-7/16	509	3.88	8.25	2.38	6.25	7.00	-	-	-	1/2	
1-11/16	510	4.06	8.25	2.34	6.50	7.00	-	-	-	1/2	
1-15/16	511	4.25	9.63	2.75	7.38	8.25	-	-	-	5/8	
2-3/16	513	4.64	11.00	3.13	8.50	9.50	8.13	9.50	1.88	5/8	1/2
2-7/16 2-1/2	515	5.20	11.13	3.13	8.63	9.63	8.63	9.63	1.88	5/8	1/2
2-11/16 2-3/4	516	5.44	12.59	3.50	9.63	11.00	9.63	11.00	2.13	3/4	5/8
2-15/16 3	517	5.39	12.59	3.50	9.88	11.00	9.88	11.00	2.13	3/4	5/8
3-3/16	518	6.16	13.63	3.88	10.25	11.75	10.38	11.63	2.13	3/4	5/8
3-7/16 3-1/2	520	6.39	15.36	4.34	11.63	13.13	11.63	13.13	2.38	7/8	3/4
3-15/16 4	522	7.16	16.50	4.75	-	-	12.59	14.50	2.75	-	3/4
4-3/16	524	8.05	16.50	4.72	-	-	13.25	14.50	2.75	-	3/4
4-7/16 4-1/2	526	8.27	18.38	5.13	-	-	14.50	16.00	3.25	-	7/8
4-15/16 5	528	8.77	19.69	5.88	-	-	15.63	17.38	3.38	-	1

S-1 Shaft Size	Housing	H	J	K	M	P	Q ★	S ●	W Static Oil Level	X	Y	Drain Hole Size
1-7/16	509	0.88	4.30	1.78	2.25	4.88	1.03	0.13	0.92	1.09	0.63	1/8-27NPSI
1-11/16	510	1.03	4.59	1.88	2.50	5.13	1.11	0.13	1.08	1.25	0.81	1/8-27NPSI
1-15/16	511	1.03	5.25	1.97	2.75	5.78	1.20	0.13	1.16	1.94	0.83	1/8-27NPSI
2-3/16	513	1.03	5.94	2.16	3.00	6.50	1.38	0.16	1.11	1.66	0.78	1/8-27NPSI
2-7/16 2-1/2	515	1.25	6.44	2.31	3.25	7.06	1.39	0.13	1.16	1.78	0.88	1/4-18NPSF
2-11/16 2-3/4	516	1.06	6.75	2.42	3.50	7.94	1.44	0.18	1.25	1.97	0.95	1/4-18NPSF
2-15/16 3	517	1.25	7.38	2.47	3.75	8.19	1.50	0.19	1.38	2.13	1.06	3/8-18NPSF
3-3/16	518	1.44	7.75	2.84	4.00	8.66	1.72	0.19	1.47	2.50	1.13	3/8-18NPSF
3-7/16 3-1/2	520	1.66	8.75	3.16	4.50	9.78	1.92	0.19	1.64	2.63	1.25	3/8-18NPSF
3-15/16 4	522	1.78	9.41	3.30	4.94	10.59	2.09	0.19	1.80	2.88	1.34	3/8-18NPSF
4-3/16	524	1.50	10.25	3.64	5.25	11.25	2.28	0.19	1.84	3.19	1.38	1/2-14NPSF
4-7/16 4-1/2	526	2.06	11.53	3.75	6.00	12.41	2.47	0.19	2.34	3.31	1.63	1/2-14NPSF
4-15/16 5	528	2.06	11.81	4.00	6.00	13.25	2.45	0.19	2.03	3.63	1.47	1/2-14NPSF

▲ Housing width with drain plugs

★ Distance shaft should extend beyond housing centerline if pillow block is closed end style

● Non-expansion bearing offset from centerline. For expansion bearing S = 0

Dowel hole locations for Precision Positioning, see Page B15-24 - B15-25

SELECTION/DIMENSIONS

USAF 500 Housing Dimensions

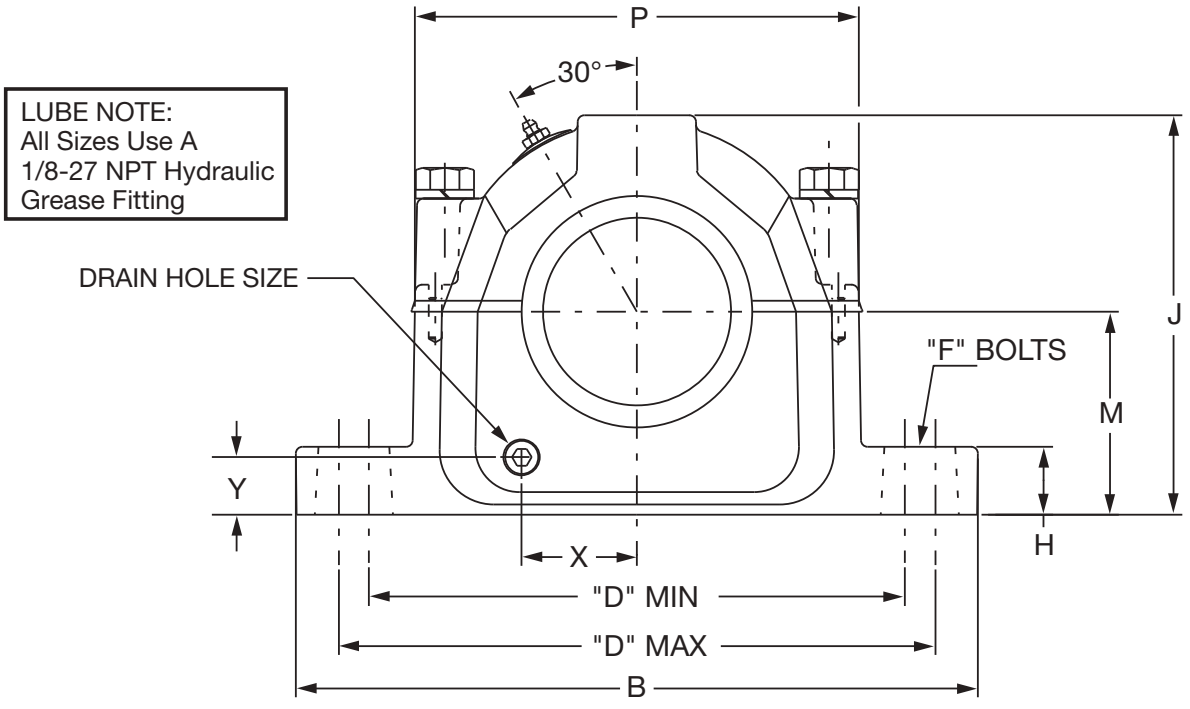

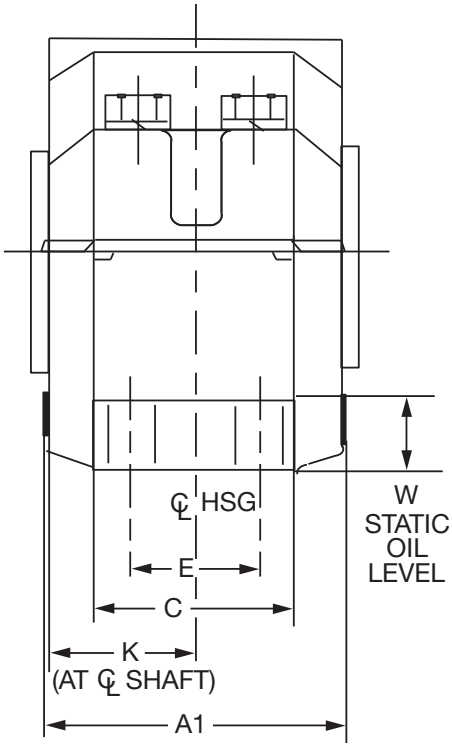

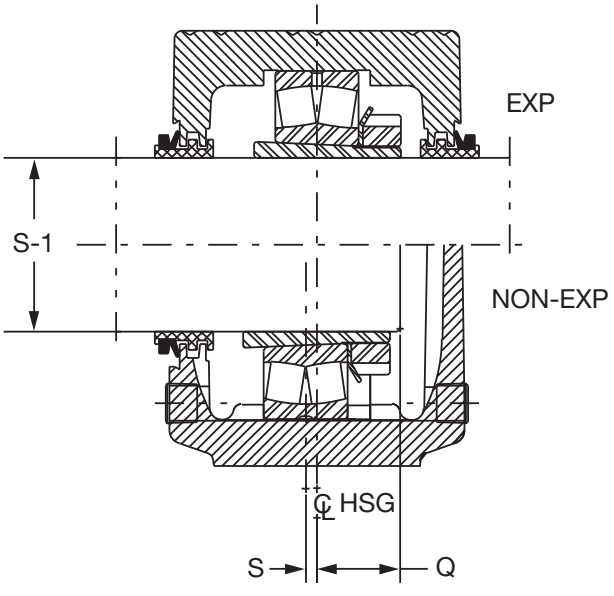

DODGE



USAF 500 Housing Dimensions

S-1 Shaft Size	Housing	A1▲	B	C	D				E	F	
					2-Bolt		4-Bolt			Bolt Dia.	
					Min	Max	Min	Max		2-Bolt	4-Bolt
5-3/16	530	9.36	20.88	6.25	-	-	16.75	18.25	3.75	-	1
5-7/16 5-1/2	532	9.92	21.66	6.25	-	-	17.38	19.25	3.75	-	1
5-15/16 6	534	9.91	24.75	6.75	-	-	19.38	21.63	4.25	-	1
6-7/16 6-1/2	536	10.41	26.75	7.13	-	-	20.88	23.63	4.63	-	1
6-15/16 7	538	10.81	28.00	7.50	-	-	21.63	24.38	4.50	-	1-1/4
7-3/16	540	11.53	28.75	8.00	-	-	22.50	25.00	5.00	-	1-1/4
7-1/2	544S	12.30	32.75	8.80	-	-	24.75	27.88	5.25	-	1-1/2
7-15/16 8	544										
8-7/16 8-1/2 8-15/16 9	048	11.53	28.75	8.00	-	-	22.50	25.00	5.00	-	1-1/4
9-7/16 9-1/2	052	12.30	32.75	8.88	-	-	24.75	27.88	5.25	-	1-1/2
9-15/16 10	056	13.66	34.25	9.00	-	-	26.25	29.50	5.50	-	1-1/2
10-7/16 10-1/2	056L										

S-1 Shaft Size	Housing	H	J	K	M	P	Q ★	S ●	W Static Oil Level	X	Y	Drain Hole Size
5-3/16	530	2.38	12.50	4.33	6.31	14.31	2.45	0.19	2.03	3.59	1.33	1/2-14NPSF
5-7/16 5-1/2	532	2.34	13.31	4.63	6.69	14.91	2.97	0.19	2.09	4.03	1.33	1/2-14NPSF
5-15/16 6	534	2.88	14.56	4.63	7.06	16.81	3.13	0.19	2.19	4.16	1.33	1/2-14NPSF
6-7/16 6-1/2	536	3.00	15.13	4.88	7.50	17.19	3.16	0.19	2.42	4.22	1.63	1/2-14NPSF
6-15/16 7	538	3.13	15.81	5.06	7.88	18.00	3.30	0.19	2.53	4.75	1.61	1/2-14NPSF
7-3/16	540	3.38	16.63	5.44	8.25	19.00	3.50	0.19	2.47	4.91	1.53	1/2-14NPSF
7-1/2	544S	3.75	18.88	5.81	9.50	21.25	3.73	0.19	3.25	5.44	2.03	1/2-14NPSF
7-15/16 8	544											
8-7/16 8-1/2 8-15/16 9	48	3.38	16.63	5.44	8.25	19.00	3.56	0.00	2.25	-	-	-
9-7/16 9-1/2	52	3.75	18.88	5.81	9.50	21.25	3.88	0.00	2.89	-	-	-
9-15/16 10	56	4.00	20.00	6.38	9.88	22.31	4.00	0.00	2.36	-		-
10-7/16 10-1/2	056L											

▲ Housing width with drain plugs

★ Distance shaft should extend beyond housing centerline if pillow block is closed end style

● Non-expansion bearing offset from centerline. For expansion bearing S = 0

FEATURES/BENEFITS PAGE B15-3	SPECIFICATION/HOW TO ORDER PAGE B15-7	NOMENCLATURE PAGE B15-8	SELECTION PAGE B15-13

SELECTION/DIMENSIONS

USAF 500 Pillow Block Seals

LENGTH THRU BORE W/SEALS

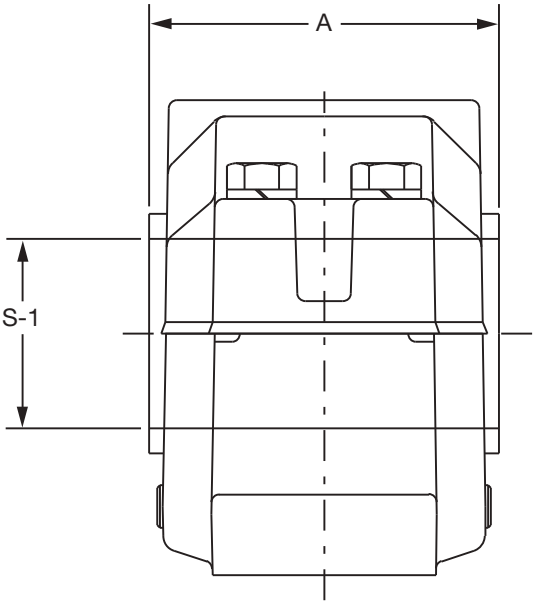

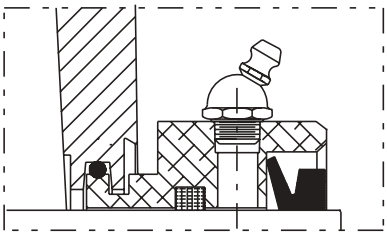

AUXILIARY TACONITE Seal
For dusty environments and low to moderate speeds

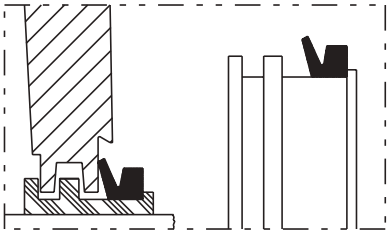

TRIPLE-TECT Seal
General purpose seal for wet or dirty environments

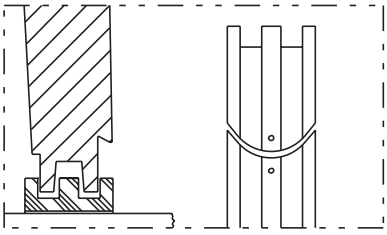

SPLIT Seal
Permits easy installation in hard-to-reach applications without removing shaft. Non-metallic split LER
See page B11-80 for SPLIT Seal part numbers

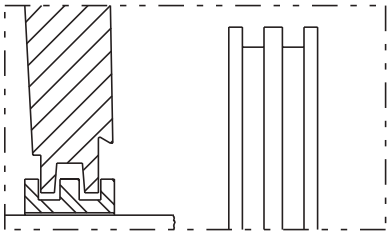

LER SEAL
High speed seal for relatively clean environments

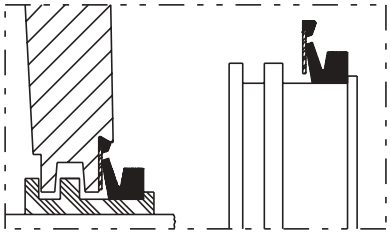

DROP-IN TRIPLE-TECT Seal
DODGE exclusive. popular TRIPLE-TECT features with simplified installation.

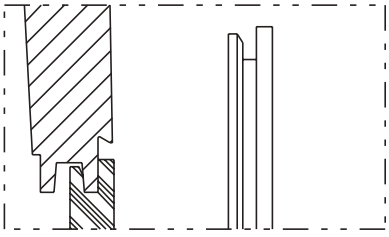

END COVER Seal
Allows use of open shaft housing as closed-end



USAF 500 Pillow Block Seals

500 Seals - Inch											
S-1 Shaft size (Inch)	Housing	Seal Group	Part Numbers					A			
			Triple-Tect (TT)	Triple-Tect Drop-in (TTDN)	#Metal Labyrinth (LER)	Auxiliary Taconite (AUX)	End Cover	TT	TTDN	LER	AUX
1-7/16	509	8	**043578**	**-**	**042193**	**041685**	**040700**	3.97	3.97	3.42	6.56
1-11/16	510	10	**043579**	**-**	**042199**	**041686**	**040701**	4.14	4.14	3.61	6.73
1-15/16	511	12	**043540**	**039852**	**042512**	**041687**	**040702**	4.34	4.34	3.83	6.69
2-3/16	513	14	**043541**	**039853**	**042513**	**041688**	**040703**	4.72	4.72	4.19	7.56
2-7/16	515	20	**043542**	**039538**	**042514**	**042380**	**040704**	4.94	4.94	4.47	7.47
2-1/2			**043543**	**039854**	**042515**	**040890**	**040704**				
2-11/16	516	24	**043544**	**039855**	**042516**	**042381**	**040705**	5.33	5.33	4.72	7.72
2-3/4			**043545**	**039856**	**042517**	**040891**	**040705**				
2-15/16	517	28	**043546**	**039530**	**042518**	**042382**	**040706**	5.44	5.44	4.83	7.95
3			**043547**	**039857**	**042519**	**040918**	**040706**				
3-3/16	518	34	**043548**	**039858**	**042520**	**040892**	**040707**	6.20	6.20	5.70	8.27
3-7/16	520	46	**043549**	**039859**	**042521**	**042383**	**040708**	6.78	6.78	6.19	9.06
3-1/2			**043550**	**039860**	**042522**	**040919**	**040708**				
3-15/16	522	50	**043551**	**039861**	**042523**	**042384**	**040709**	7.06	7.13	6.59	9.05
4			**043552**	**039862**	**042524**	**040893**	**040709**				
4-3/16	524	52	**043553**	**039863**	**042525**	**044360**	**040710**	7.91	7.59	7.31	-
4-7/16	526	54	**043554**	**039864**	**042526**	**042385**	**040711**	8.08	8.08	7.50	10.63
4-1/2			**043555**	**039865**	**042527**	**042386**	**040711**				
4-15/16	528	56	**043556**	**039866**	**042528**	**042387**	**040712**	8.47	8.47	7.88	11.13
5			**043557**	**039867**	**042529**	**040894**	**040712**				
5-3/16	530	58	**043558**	**-**	**042530**	**-**	**040713**	9.28	9.28	8.70	-
5-7/16	532	60	**043559**	**-**	**042531**	**042388**	**040714**	9.78	9.78	9.20	11.95
5-1/2			**043574**	**-**	**042532**	**040895**	**040714**				
5-15/16	534	64	**043560**	**-**	**042533**	**042389**	**040681**	9.83	9.83	9.13	11.88
6			**043561**	**-**	**042534**	**041646**	**040681**				
6-7/16	536	68	**043562**	**-**	**042535**	**042390**	**040682**	10.39	10.39	9.69	12.94
6-1/2			**043563**	**-**	**042536**	**042391**	**040682**				
6-15/16	538	72	**043564**	**-**	**042537**	**042392**	**040683**	10.69	10.69	9.98	13.23
7			**043565**	**-**	**042538**	**043109**	**040683**				
7-3/16	540	74	**046421**	**-**	**043386**	**040690**	**040691**	11.44	-	10.72	15.28
7-1/2	544S	76	**043567**	**-**	**042539**	**040896**	**040684**	12.13	12.13	11.34	-
7-15/16	544	78	**043566**	**-**	**042540**	**042393**	**040685**				15.97
8			**043568**	**-**	**042541***	**042394**	**040685**				
8-7/16	048	90	**043569**	**-**	**042542***	**040897**	**042368**	12.06	-	11.72	15.53
8-1/2			**043570**	**-**	**042543***	**040898**	**042368**				
8-15/16			**043571**	**-**	**042544***	**040899**	**042368**				
9			**043572**	**-**	**042545***	**040995**	**042368**				
9-7/16	052	84	**043538**	**-**	**042510***	**040900**	**422606**	12.77	-	11.41	16.22
9-1/2			**422545**	**-**	**422594***	**040901**	**422606**				
9-15/16	056	92	**043575**	**-**	**042511***	**-**	**042369**	13.92	-	12.66	17.13
10			**043573**	**-**	**041082***	**042395**	**042369**				
10-7/16	056L	94	**047940**	**-**	**042036***	**-**	**042397**	14.05	-	12.66	17.13
10-1/2			**047941**	**-**	**422573***	**042396**	**042397**				

 # NOTE: LER seals are made from Aluminum unless otherwise noted by the * symbol.

If an * appears by the part number, the LER seal is manufactured from Steel.

SELECTION/DIMENSIONS

USAF 22200K and 23000K Spherical Roller Bearings

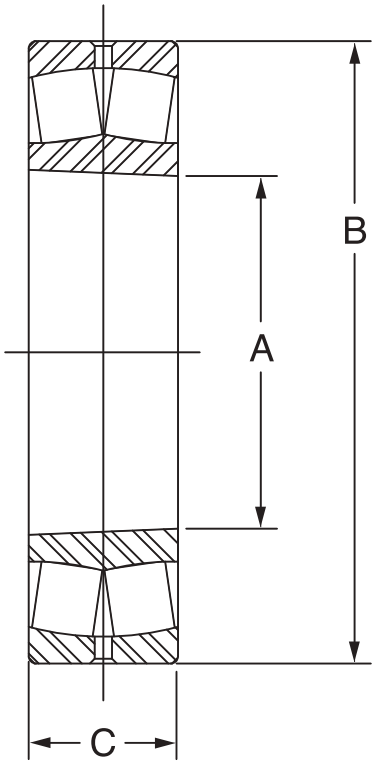



USAF 22200K and 23000K Spherical Roller Bearings

S-1 Shaft Size (Inch)	Housing	Bearing No.	Part No.	Approx. Wt. (Lbs)	A Inch (mm)	B Inch (mm)	C Inch (mm)
1-7/16	509	22209K	**422134**	1.2	1.7717 (45)	3.3465 (85)	.9055 (23)
1-11/16	510	22210K	**422137**	1.3	1.9685 (50)	3.5233 (90)	.9055 (23)
1-15/16	511	22211K	**422123**	1.8	2.1654 (55)	3.9370 (100)	.9843 (25)
2-3/16	513	22213K	**422124**	3.2	2.5591 (65)	4.7244 (120)	1.2205 (31)
2-7/16 2-1/2	515	22215K	**422001**	3.6	2.9528 (75)	5.1181 (130)	1.2205 (31)
2-11/16 2-3/4	516	22216K	**422003**	4.4	3.1496 (80)	5.5188 (140)	1.2992 (33)
2-15/16 3	517	22217K	**422005**	5.5	3.3465 (85)	5.9055 (150)	1.4173 (36)
3-3/16	518	22218K	**422007**	7.0	3.5433 (90)	6.2992 (160)	1.5748 (40)
3-7/16 3-1/2	520	22220K	**422009**	10.4	3.9370 (100)	7.0866 (180)	1.8110 (46)
3-15/16 4	522	22222K	**422011**	14.9	4.3307 (110)	7.8740 (200)	2.0866 (53)
4-3/16	524	22224K	**422013**	18.7	4.7244 (120)	8.4646 (215)	2.2865 (58)
4-7/16 4-1/2	526	22226K	**422015**	23.4	5.1181 (130)	9.0551 (230)	2.5197 (64)
4-15/16 5	528	22228K	**422017**	29.5	5.5118 (140)	9.8425 (250)	2.6772 (68)
5-3/16	530	22230K	**422019**	37.5	5.9055 (150)	10.6299 (270)	2.8740 (73)
5-7/16 5-1/2	532	22232K	**422021**	48.1	6.2992 (160)	11.4173 (290)	3.1496 (80)
5-15/16 6	534	22234K	**422023**	58.0	6.6929 (170)	12.2047 (310)	3.3858 (86)
6-7/16 6-1/2	536	22236K	**422025**	60.8	7.0866 (180)	12.5984 (320)	3.3858 (86)
6-15/16 7	538	22238K	**422027**	78.9	7.4803 (190)	13.3858 (340)	3.6220 (92)
7-3/16	540	22240K	**422064**	94.1	7.8740 (200)	14.1732 (360)	3.8583 (98)
7-1/2	544S	22244K	**422029**	129.0	8.6614 (220)	14.7480 (400)	4.2520 (108)
7-15/16 8	544						
8-7/16 8-1/2 8-15/16 9	048	23048K	**422031**	73.4	9.4488 (240)	14.1732 (360)	3.6220 (92)
9-7/16 9-1/2	052	23052K	**422543**	106.0	10.2362 (260)	15.7480 (400)	4.0945 (104)
9-15/16 10	056	23056K	**422030**	114.0	11.0236 (280)	16.5354 (430)	4.1732 (106)
10-7/16 10-1/2	056L						

FEATURES/BENEFITS PAGE B15-3	SPECIFICATION/HOW TO ORDER PAGE B15-7	NOMENCLATURE PAGE B15-8	SELECTION PAGE B15-13

SELECTION/DIMENSIONS



USAF 500 Adaptor Assembly (SNW)

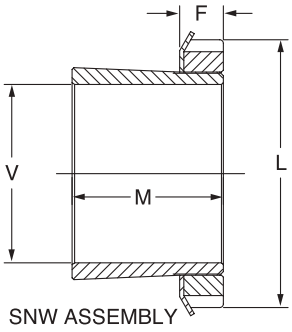

SNW ASSEMBLY

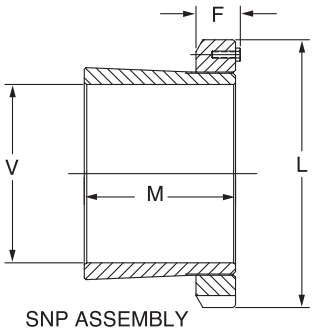

SNP ASSEMBLY

V Shaft Dia. (In)	Housing	SNW/SNP Number	Part Number	Approx Wt. (Lbs)	L (in.)	F Max (in.)	M (in.)
1-7/16	509	H309-SNW-107	**046350**	1.0	2.53	0.52	1.58
1-11/16	510	H310-SNW-111	**046351**	1.0	2.69	0.58	1.77
1-15/16	511	H311-SNW-115	**046352**	0.8	2.97	0.58	1.85
2-3/16	513	H313-SNW-203	**046353**	1.6	3.38	0.64	2.10
2-7/16	515	H315-SNW-207	**046354**	2.6	3.88	0.69	2.29
2-1/2		H315-SMW-208	**046355**	2.3			
2-11/16	516	H316-SNW-211	**046356**	2.6	4.16	0.69	2.37
2-3/4		H316-SNW-212	**046357**	2.6			
2-15/16	517	H317-SNW-215	**046358**	3.0	4.41	0.72	2.47
3		H317-SNW-300	**046359**	2.5			
3-3/16	518	H318-SNW-303	**046360**	3.1	4.66	0.80	2.63
3-7/16	520	H320-SNW-307	**046361**	4.6	5.19	0.83	2.87
3-1/2		H320-SNW-308	**046362**	4.4			
3-15/16	522	H322-SNW-315	**046363**	5.6	5.72	0.86	3.19
4		H322-SNW-400	**046364**	5.0			
4-3/16	524	H3124-SNW-403	**046430**	6.5	6.12	0.92	3.47
4-7/16	526	H3126-SNW-407	**046431**	9.2	6.75	0.95	3.76
4-1/2		H3126-SNW-408	**046432**	8.6			
4-15/16	528	H3128-SNW-415	**046433**	10.0	7.09	1.02	3.97
5		H3128-SNW-500	**046434**	9.0			
5-3/16	530	SNW30-503	**043618**	12.7	7.69	1.08	4.22
5-7/16	532	SNW32-507	**043619**	15.9	8.06	1.14	4.57
5-1/2		SNW32-508	**043634**	15.0			
5-15/16	534	SNW34-515	**043620**	17.6	8.66	1.23	4.83
6		SNW34-600	**043621**	17.0			
6-7/16	536	SNW36-607	**043622**	17.0	9.06	1.27	5.02
6-1/2		SNW36-608	**043623**	18.0			
6-15/16	538	SNW38-615	**043624**	18.0	9.47	1.30	5.26
7		SNW38-700	**043625**	17.0			
7-3/16	540	SNW40-703	**046545**	30.7	9.84	1.36	5.48
7-1/2	544S	SNW44-708	**043627**	30.2	11.00	1.42	5.90
7-15/16	544	SNW44-715	**043626**	36.0			
8		SNW44-800	**043628**	34.7			
8-7/16	048	SNP048-807	**043629**	38.0	11.44	1.73	5.44
8-1/2		SNP048-808	**043630**	30.0			
8-15/16		SNP048-815	**043631**	28.0			
9		SNP048-900	**043632**	22.0			
9-7/16	052	SNP052-907	**043585**	41.1	12.19	1.80	6.02
9-1/2		SNP052-908	**422538**	40.0			
9-15/16	056	SNP056-915	**043586**	43.7	13.00	1.89	6.19
10		SNP056-1000	**043633**	42.0			
10-7/16	056L	SNP056-1007	**043580**	30.0			
10-1/2		SNP056-1008	**422567**	28.0			



USAF Stabilizing Rings

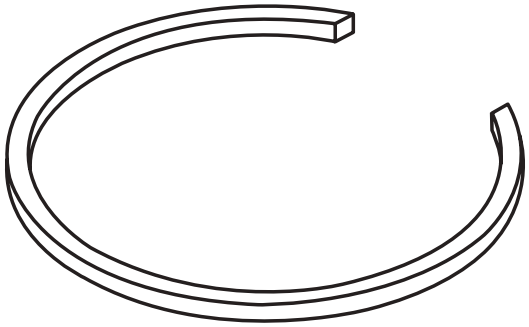

Housing	Stab. Ring No.	Stab. Ring Part No. ▲
509	9-9	**041987**
510	10-8	**042335**
511	11-9	**042315**
513	13-0	**042316**
515/215	15-0	**041174**
516/216	16-13	**041172**
517/217	17-14	**041175**
518/218	18-15	**041173**
520/220	20-17	**041176**
522/222	22-19	**041177**
524/224	24-20	**041185**
526/226	26-0	**041178**
528/228	28-0	**041179**
530/230	30-0	**041186**
532/232	32-0	**041180**
534/234	34-0	**041181**
536/236	36-30	**041184**
538/238	38-32	**041182**
540/240	40-34	**046639**
544S/544/244	44-38	**041183**
* 048	A8897	**041161**
* 052	A8898	**422554**
* 056/056L	A8819	**041213**

Housing	Stab. Ring No.	Stab. Ring Part No. ▲
308	10-8	**042335**
609/309	11-9	**042315**
610/310	0-10	**046642**
611/311	6-11	**046632**
312	15-0	**041174**
613/313	16-13	**041172**
314	17-14	**041175**
615/315	18-15	**041173**
616/316	19-16	**046643**
617/317	20-17	**041176**
620/320	24-20	**041185**
622/322	0-22	**046635**
624/324	0-24	**046634**
626/326	0-26	**046637**
628/328	0-28	**046638**
630/330	36-30	**041184**
632/332	38-32	**041182**
634/334	40-34	**046639**
638/338	44-38	**041183**

* Two stabilizing rings required per housing

▲ Part numbers for reference only. Housings come equipped with stabilizing rings enclosed

FEATURES/BENEFITS PAGE B15-3	SPECIFICATION/HOW TO ORDER PAGE B15-7	NOMENCLATURE PAGE B15-8	SELECTION PAGE B15-13

SELECTION/DIMENSIONS

USAF/SN D-Mount Adapter System

1. **Saves time removing bearing from shaft!**
2. **Reduces the use of blue flame torches!**
3. **Increases uptime!**
4. **Lowers maintenance costs!**

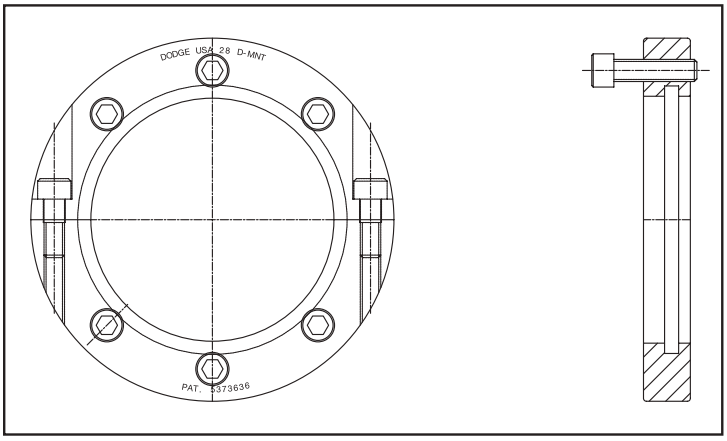

D-MOUNT TOOL

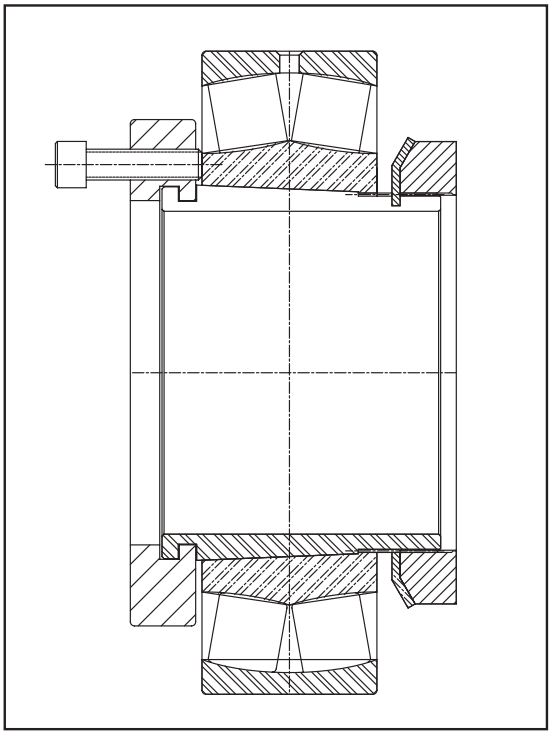

D-MOUNT TOOL - SNW - BEARING WITH TOOL ASSEMBLED READY TO REMOVE BEARING

For use on 22209K through 22244K size bearings

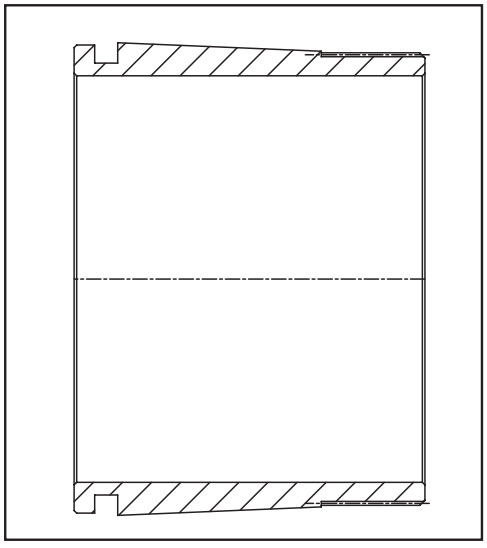

D-MOUNT ADAPTER SLEEVE

HOW IT WORKS

Split D-Mount tool is mounted on D-Mount adapter and uses socket head cap screws to force the inner ring off the taper to unlock the bearing from the adapter sleeve. No additional space allowance is required.

This adapter sleeve is used in place of the standard adapter sleeve.



D-MOUNT Adapter System SAF/SN Mounted Bearings

PART NUMBERS AND DESCRIPTION

Part No.	Description-Inch
D-Mount Adapter with Removal Feature-USAF500	
046960	DH09-SNW-107
046961	DH10-SNW-111
046962	DH11-SNW-115
046963	DH13-SNW-203
046964	DH15-SNW-207
046965	DH15-SNW-208
046966	DH16-SNW-211
046967	DH1 6-SNW-212
046968	DH17-SNW-215
046969	DH17-SNW-300
046970	DH18-SNW-303
046971	DH20-SNW-307
046972	DH20-SNW-308
046973	DH22-SNW-315
046974	DH22-SNW-400
046975	DH24-SNW-403
046976	DH26-SNW-407
046977	DH26-SNW-408
046978	DH28-SNW-415
046979	DH28-SNW-500
046980	DH30-SNW-503
046981	DH32-SNW-507
046982	DH32-SNW-508
046983	DH34-SNW-515
046984	DH34-SNW-600
046985	DH36-SNW-607
046986	DH36-SNW-608
046987	DH38-SNW-615
046988	DH38-SNW-700
046989	DH40-SNW-703
046991	DH44-SNW-708
046992	DH44-SNW-715
046993	DH44-SNW-800

* Made to order.

Part No.	Description-Metric
D-Mount Adapter with Removal Feature-USN500	
047815 *	DH09-SNW-40M
047816 *	DH10-SNW-45M
047817 *	DH11-SNW-50M
047818 *	DH12-SNW-55M
047819 *	DH13-SNW-60M
047820 *	DH15-SNW-65M
047821 *	DH16-SNW-70M
047822 *	DH17-SNW-75M
047823 *	DH18-SNW-80M
047824 *	DH19-SNW-85M
047825 *	DH20-SNW-90M
047826 *	DH22-SNW-100M
047827 *	DH24-SNW-110M
047828 *	DH26-SNW-115M
047829 *	DH28-SNW-125M
047830 *	DH30-SNW-135M
047831 *	DH32-SNW-140M

Part No.	Description
D-Mount Adapter Removal Tools	
046872	D-MOUNT TOOL 09
046873	D-MOUNT TOOL 10
046874	D-MOUNT TOOL 11
046850	D-MOUNT TOOL 12
046875	D-MOUNT TOOL 13
046876	D-MOUNT TOOL 15
046877	D-MOUNT TOOL 16
046878	D-MOUNT TOOL 17
046879	D-MOUNT TOOL 18
046851	D-MOUNT TOOL 19
046880	D-MOUNT TOOL 20
046881	D-MOUNT TOOL 22
046882	D-MOUNT TOOL 24
046883	D-MOUNT TOOL 26
046884	D-MOUNT TOOL 28
046885	D-MOUNT TOOL 30
046886	D-MOUNT TOOL 32
046887	D-MOUNT TOOL 34
046891	D-MOUNT TOOL 36
046892	D-MOUNT TOOL 38
046893	D-MOUNT TOOL 40
046894	D-MOUNT TOOL 44

NOTE: The D-MOUNT Adapter Sleeve SNW Assembly should be used in place of the standard SNW assembly during installation. The D-MOUNT tool will be needed during removal.

SELECTION/DIMENSIONS



USAF 500 Air Handling Pillow Blocks with TRIPLE-TECT Seals

LUBE NOTE:
All Sizes Use A
1/8-27 NPT Hydraulic
Grease Fitting

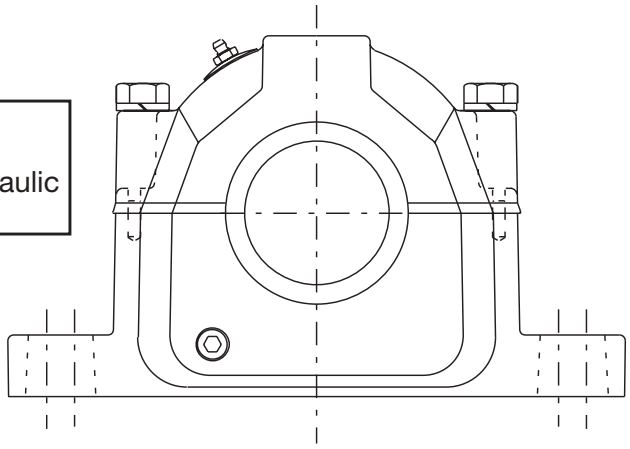

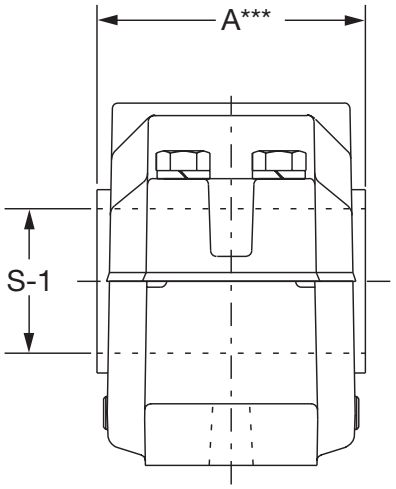

Shaft Dia S-1	Complete Pillow Block Part No.	Housing W/ Stab Ring Part No.	Bearing Part No.	Dynamic Capacity (C), lbs.	Max Rpm (Grease)	SNW Part No.	TRIPLE-TECT Part No.	End Cover Part No.
1-7/16	P2B509-USAF-107TTAH 039100	H2S-509-USAF 043995	BRG22209KC3AH 422980	24,500	5,600	H309-SNW-107 046350	08TT107 043578	EC08 040700
1-11/16	P2B510-USAF-111TTAH 039101	H2S-510-USAF 043996	BRG22210KC3AH 422981	26,000	5,300	H310-SNW-111 046351	10TT111 043579	EC10 040701
1-15/16	P2B511-USAF-115TTAH 039102	H2S-511-USAF 043997	BRG22211KC3AH 422982	31,500	4,500	H311-SNW-115 046352	12TT115 043540	EC12 040702
2-3/16	P2B513-USAF-203TTAH 039103	H2S-513-USAF 043998	BRG22213KC3AH 422983	45,500	3,800	H313-SNW-203 046353	14TT203 043541	EC14 040703
	P4B513-USAF-203TTAH 039113	H4S-513-USAF 039669	BRG22213KC3AH 422983	45,500	3,800	H313-SNW-203 046353	14TT203 043541	EC14 040703
2-7/16	P2B515-USAF-207TTAH 039104	H2S-515-USAF 044000	BRG22215KC3AH 422984	48,000	3,400	H315-SNW-207 046354	20TT207 043542	EC20 040704
	P4B515-USAF-207TTAH 039114	H4S-515-USAF 044003	BRG22215KC3AH 422984	48,000	3,400	H315-SNW-207 046354	20TT207 043542	EC20 040704
2-1/2	P2B515-USAF-208TTAH 039105	H2S-515-USAF 044000	BRG22215KC3AH 422984	48,000	3,400	H315-SNW-208 046355	20TT208 043543	EC20 040704
	P4B515-USAF-208TTAH 039115	H4S-515-USAF 044003	BRG22215KC3AH 422984	48,000	3,400	H315-SNW-208 046355	20TT208 043543	EC20 040704
2-11/16	P2B516-USAF-211TTAH 039106	H2S-516-USAF 044198	BRG22216KC3AH 422985	56,000	3,200	H316-SNW-211 046356	24TT211 043544	EC24 040705
	P4B516-USAF-211TTAH 039116	H4S-516-USAF 044007	BRG22216KC3AH 422985	56,000	3,200	H316-SNW-211 046356	24TT211 043544	EC24 040705
2-3/4	P2B516-USAF-212TTAH 039107	H2S-516-USAF 044198	BRG22216KC3AH 422985	56,000	3,200	H316-SNW-212 046357	24TT212 043545	EC24 040705
	P4B516-USAF-212TTAH 039117	H4S-516-USAF 044007	BRG22216KC3AH 422985	56,000	3,200	H316-SNW-212 046357	24TT212 043545	EC24 040705
2-15/16	P2B517-USAF-215TTAH 039108	H2S-517-USAF 044010	BRG22217KC3AH 422986	68,000	3,000	H317-SNW-215 046358	28TT215 043546	EC28 040706
	P4B517-USAF-215TTAH 039118	H4S-517-USAF 044013	BRG22217KC3AH 422986	68,000	3,000	H317-SNW-215 046358	28TT215 043546	EC28 040706



USAF 500 Air Handling Pillow Blocks with TRIPLE-TECT Seals

Shaft Dia S-1	Complete Pillow Block Part No.	Housing W/ Stab Ring Part No.	Bearing Part No.	Dynamic Capacity (C), lbs.	Max Rpm (Grease)	SNW Part No.	TRIPLE-TECT Part No.	End Cover Part No.
3	P2B517-USAF-300TTAH 039109	H2S-517-USAF 044010	BRG22217KC3AH 422986	68,000	3,000	H317-SNW-300 046359	28TT300 043547	EC28 040706
	P4B517-USAF-300TTAH 039119	H4S-517-USAF 044013	BRG22217KC3AH 422986	68,000	3,000	H317-SNW-300 046359	28TT300 043547	EC28 040706
3-3/16	P2B518-USAF-303TTAH 039110	H2S-518-USAF 044199	BRG22218KC3AH 422987	78,000	2,600	H318-SNW-303 046360	34TT303 043548	EC34 040707
	P4B518-USAF-303TTAH 039120	H4S-518-USAF 044114	BRG22218KC3AH 422987	78,000	2,600	H318-SNW-303 046360	34TT303 043548	EC34 040707
3-7/16	P2B520-USAF-307TTAH 039111	H2S-520-USAF 044020	BRG22220KC3AH 422988	96,500	2,200	H320-SNW-307 046361	46TT307 043549	EC46 040708
	P4B520-USAF-307TTAH 039121	H4S-520-USAF 044023	BRG22220KC3AH 422988	96,500	2,200	H320-SNW-307 046361	46TT307 043549	EC46 040708
3-1/2	P2B520-USAF-308TTAH 039112	H2S-520-USAF 044020	BRG22220KC3AH 422988	96,500	2,200	H320-SNW-308 046362	46TT308 043550	EC46 040708
	P4B520-USAF-308TTAH 039122	H4S-520-USAF 044023	BRG22220KC3AH 422988	96,500	2,200	H320-SNW-308 046362	46TT308 043550	EC46 040708
3-15/16	P4B522-USAF-315TTAH 039123	H4S-522-USAF 044025	BRG22222KC3AH 422989	122,000	2,000	H322-SNW-315 046363	50TT315 043551	EC50 040709
4	P4B522-USAF-400TTAH 039124	H4S-522-USAF 044025	BRG22222KC3AH 422989	122,000	2,000	H322-SNW-400 046364	50TT400 043552	EC50 040709
4-3/16	P4B524-USAF-403TTAH 039125	H4S-524-USAF 044202	BRG22224KC3AH 422990	143,000	1,900	H3124-SNW-403 046430	52TT403 043553	EC52 040710
4-7/16	P4B526-USAF-407TTAH 039126	H4S-526-USAF 044031	BRG22226KC3AH 422991	170,000	1,800	H3126-SNW-407 046431	54TT407 043554	EC54 040711
4-1/2	P4B526-USAF-408TTAH 039127	H4S-526-USAF 044031	BRG22226KC3AH 422991	170,000	1,800	H3126-SNW-408 046432	54TT408 043555	EC54 040711
4-15/16	P4B528-USAF-415TTAH 039128	H4S-528-USAF 044034	BRG22228KC3AH 422992	196,000	1,700	H3128-SNW-415 046433	56TT415 043556	EC56 040712
5	P4B528-USAF-500TTAH 039129	H4S-528-USAF 044034	BRG22228KC3AH 422992	196,000	1,700	H3128-SNW-500 046434	56TT500 043557	EC56 040712

FEATURES/BENEFITS PAGE B15-3	SPECIFICATION/HOW TO ORDER PAGE B15-7	NOMENCLATURE PAGE B15-8	SELECTION PAGE B15-13

SELECTION/DIMENSIONS

USAF 500 Air Handling Pillow Blocks with LER Seals

LUBE NOTE:
All Sizes Use A
1/8-27 NPT Hydraulic
Grease Fitting

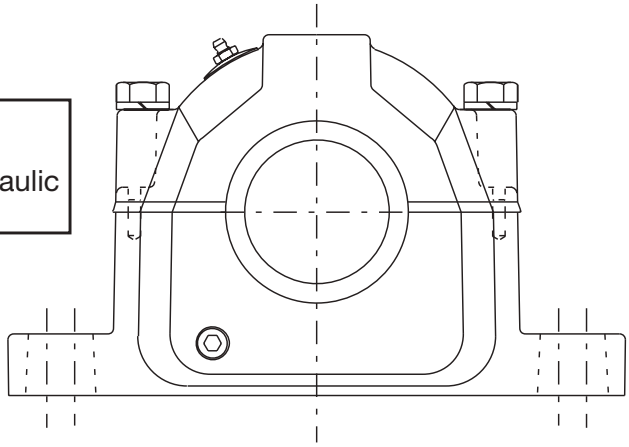

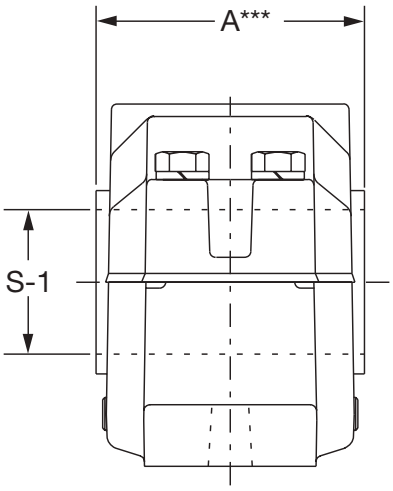

Shaft Dia S-1	Complete Pillow Block Part No.	Housing W/ Stab Ring Part No.	Bearing Part No.	Dynamic Capacity (C), lbs.	Max Rpm LER (Grease)	SNW Part No.	# LER Part No.	End Cover Part No.
1-7/16	P2B509-USAF-107LERAH 035762	H2S-509-USAF 043995	BRG22209KC3 422980	24,500	5,600	H309-SNW-107 046350	08LER107 042193	EC08 040700
1-11/16	P2B510-USAF-111LERAH 035763	H2S-510-USAF 043996	BRG22210KC3 422981	26,000	5,300	H310-SNW-111 046351	10LER111 042199 *	EC10 040701
1-15/16	P2B511-USAF-115LERAH 035764	H2S-511-USAF 043997	BRG22211KC3 422982	31,500	4,500	H311-SNW-115 046352	12LER115 042512	EC12 040702
2-3/16	P2B513-USAF-203LERAH 035765	H2S-513-USAF 043998	BRG22213KC3 422983	45,500	3,800	H313-SNW-203 046353	14LER203 042513	EC14 040703
	P4B513-USAF-203LERAH 035775	H4S-513-USAF 039669	BRG22213KC3 422983	45,500	3,800	H313-SNW-203 046353	14LER203 042513	EC14 040703
2-7/16	P2B515-USAF-207LERAH 035766	H2S-515-USAF 044000	BRG22215KC3 422984	48,000	3,400	H315-SNW-207 046354	20LER207 042514	EC20 040704
	P4B515-USAF-207LERAH 035776	H4S-515-USAF 044003	BRG22215KC3 422984	48,000	3,400	H315-SNW-207 046354	20LER207 042514	EC20 040704
2-1/2	P2B515-USAF-208LERAH 035767	H2S-515-USAF 044000	BRG22215KC3 422984	48,000	3,400	H315-SNW-208 046355	20LER208 042515	EC20 040704
	P4B515-USAF-208LERAH 035777	H4S-515-USAF 044003	BRG22215KC3 422984	48,000	3,400	H315-SNW-208 046355	20LER208 042515	EC20 040704
2-11/16	P2B516-USAF-211LERAH 035768	H2S-516-USAF 044198	BRG22216KC3 422985	56,000	3,200	H316-SNW-211 046356	24LER211 042516	EC24 040705
	P4B516-USAF-211LERAH 035778	H4S-516-USAF 044007	BRG22216KC3 422985	56,000	3,200	H316-SNW-211 046356	24LER211 042516	EC24 040705
2-3/4	P2B516-USAF-212LERAH 035769	H2S-516-USAF 044198	BRG22216KC3 422985	56,000	3,200	H316-SNW-212 046357	24LER212 042517	EC24 040705
	P4B516-USAF-212LERAH 035779	H4S-516-USAF 044007	BRG22216KC3 422985	56,000	3,200	H316-SNW-212 046357	24LER212 042517	EC24 040705
2-15/16	P2B517-USAF-215LERAH 035770	H2S-517-USAF 044010	BRG22217KC3 422986	68,000	3,000	H317-SNW-215 046358	28LER215 042518	EC28 040706
	P4B517-USAF-215LERAH 035780	H4S-517-USAF 044013	BRG22217KC3 422986	68,000	3,000	H317-SNW-215 046358	28LER215 042518	EC28 040706

 # NOTE: LER seals are made from Aluminum unless otherwise noted by the * symbol.
If an * appears by the part number, the LER seal is manufactured from Steel.

FEATURES/BENEFITS PAGE B15-3	SPECIFICATION/HOW TO ORDER PAGE B15-7	NOMENCLATURE PAGE B15-8	SELECTION PAGE B15-13



USAF 500 Air Handling Pillow Blocks with LER Seals

Shaft Dia S-1	Complete Pillow Block Part No.	Housing W/ Stab Ring Part No.	Bearing Part No.	Dynamic Capacity (C), lbs.	Max Rpm LER (Grease)	SNW Part No.	# LER Part No.	End Cover Part No.
3	P2B517-USAF-300LERAH 035771	H2S-517-USAF 044010	BRG22217KC3 422986	68,000	3,000	H317-SNW-300 046359	28LER300 042519	EC28 040706
	P4B517-USAF-300LERAH 035781	H4S-517-USAF 044013	BRG22217KC3 422986	68,000	3,000	H317-SNW-300 046359	28LER300 042519	EC28 040706
3-3/16	P2B518-USAF-303LERAH 035772	H2S-518-USAF 044199	BRG22218KC3 422987	78,000	2,600	H318-SNW-303 046360	34LER303 042520	EC34 040707
	P4B518-USAF-303LERAH 035782	H4S-518-USAF 044114	BRG22218KC3 422987	78,000	2,600	H318-SNW-303 046360	34LER303 042520	EC34 040707
3-7/16	P2B520-USAF-307LERAH 035773	H2S-520-USAF 044020	BRG22220KC3 422988	96,500	2,200	H320-SNW-307 046361	46LER307 042521	EC46 040708
	P4B520-USAF-307LERAH 035783	H4S-520-USAF 044023	BRG22220KC3 422988	96,500	2,200	H320-SNW-307 046361	46LER307 042521	EC46 040708
3-1/2	P2B520-USAF-308LERAH 035774	H2S-520-USAF 044020	BRG22220KC3 422988	96,500	2,200	H320-SNW-308 046362	46LER308 042522	EC46 040708
	P4B520-USAF-308LERAH 035784	H4S-520-USAF 044023	BRG22220KC3 422988	96,500	2,200	H320-SNW-308 046362	46LER308 042522	EC46 040708
3-15/16	P4B522-USAF-315LERAH 035785	H4S-522-USAF 044025	BRG22222KC3 422989	122,000	2,000	H322-SNW-315 046363	50LER315 042523	EC50 040709
4	P4B522-USAF-400LERAH 035786	H4S-522-USAF 044025	BRG22222KC3 422989	122,000	2,000	H322-SNW-400 046364	50LER400 042524	EC50 040709
4-3/16	P4B524-USAF-403LERAH 035787	H4S-524-USAF 044202	BRG22224KC3 422990	143,000	1,900	H3124-SNW-403 046430	52LER403 042525	EC52 040710
4-7/16	P4B526-USAF-407LERAH 035788	H4S-526-USAF 044031	BRG22226KC3 422991	170,000	1,800	H3126-SNW-407 046431	54LER407 042526	EC54 040711
4-1/2	P4B526-USAF-408LERAH 035789	H4S-526-USAF 044031	BRG22226KC3 422991	170,000	1,800	H3126-SNW-408 046432	54LER408 042527	EC54 040711
4-15/16	P4B528-USAF-415LERAH 035790	H4S-528-USAF 044034	BRG22228KC3 422992	196,000	1,700	H3128-SNW-415 046433	56LER415 042528	EC56 040712
5	P4B528-USAF-500LERAH 035791	H4S-528-USAF 044034	BRG22228KC3 422992	196,000	1,700	H3128-SNW-500 046434	56LER500 042529	EC56 040712

 # NOTE: LER seals are made from Aluminum unless otherwise noted by the * symbol.

If an * appears by the part number, the LER seal is manufactured from Steel.

FEATURES/BENEFITS PAGE B15-3	SPECIFICATION/HOW TO ORDER PAGE B15-7	NOMENCLATURE PAGE B15-8	SELECTION PAGE B15-13

SELECTION/DIMENSIONS



DODGE USAF Air Handling Bearing Assemblies Using 12XX Series Self Aligning Double Row Ball Bearing

Shaft Size	Housing Series	Housing Part No.		Bearing		SNW Part No.	Seal Part No. # LER (2-Req)	Stab Ring For Fixed Units		
		2-Bolt	4-Bolt	Part No.	Description			Description	Qty Req	Part No.
1-7/16	509	**043995**	---	**052637**	1209K.C3	**046350**	**042193**	SR-9-0	1	**058902**
1-11/16	510	**043996**	---	**052638**	1210K.C3	**046351**	**042199 ***	SR-10-8	1	**058903**
1-15/16	511	**043997**	---	**052639**	1211K.C3	**046352**	**042512**	SR-11-9	1	**058699**
2-3/16	513	**043998**	**039669**	**052640**	1213K.C3	**046353**	**042513**	SR-13	2	**042316**
2-7/16	515	**044000**	**044003**	**052641**	1215K.C3	**046354**	**042514**	SR-15-0	2	**058904**
2-11/16	516	**044198**	**044007**	**052642**	1216K.C3	**046356**	**042516**	SR-1516	2	**058905**
2-15/16	517	**044010**	**044013**	**052643**	1217K.C3	**046358**	**042518**	SR-1517	2	**058906**
3-3/16	518	**044199**	**044114**	**052570**	1218K.C3	**046360**	**042520**	SR-1518	2	**058907**
3-7/16	520	**044020**	**044023**	**052644**	1220K.C3	**046361**	**042521**	SR-1520	2	**058908**
3-15/16	522	**---**	**044025**	**051841**	1222K.C3	**046363**	**042523**	SR-1522	2	**058909**

Standard AH housings come with stabilizing ring for fixing spherical roller bearings.
With the use of the 12xx series ball bearings, if a fixed bearing is required, special stabilizing rings are needed.
Remove standard stab ring, which comes with housing, and replace with the above ball bearing stab rings.
The 4-3/16" unit is not available as fixed unit due to non-standard stab ring width. (2) special width.503-.057" would be needed.
In cases where two stab rings are needed, one should be placed on each side of the bearing.
* DODGE USAF Air Handling Bearing Assemblies use the USAF 500 Series Housings. See Page B15-36 - B15-39 for dimensions
# NOTE: LER seals are made from Aluminum unless otherwise noted by the * symbol.
If an * appears by the part number, the LER seal is manufactured from Steel.

STABILIZING RING DIMENSIONS

Stab Ring	
O.D.	**Width**
3.31	.382-.386
3.51	.382-.386
3.9	.382-.386
4.68	.311-.315
5.08	.236-.232
5.47	.326-.330
5.87	.346-.350
6.26	.386-.390
7.04	.425-.429
7.83	.484-.488



DODGE USAF Air Handling 1200 Series Self-Aligning Ball Bearing

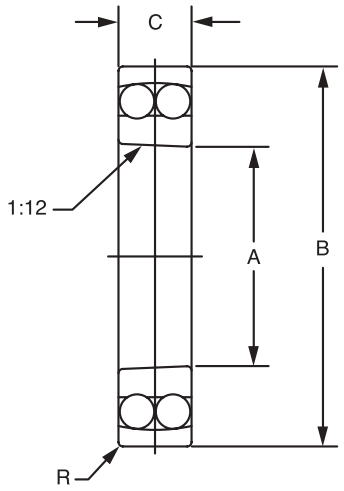

Shaft Size	Bearing Series	e	$F_A/F_R \le e$	$F_A/F_R > e$	Dynamic Capacity C	Static Capacity C_0	Maximum RPM	
			Y	Y			Grease	Oil
107	1209	0.21	3.0	4.7	4900	1660	7500	9000
111	1210	0.20	3.2	4.9	5100	1830	7000	8500
115	1211	0.19	3.3	5.1	6000	2240	6300	7500
203	1213	0.18	3.6	5.5	6950	2800	5300	6300
207	1215	0.17	3.6	5.6	8800	3450	4800	5600
211	1216	0.16	3.9	6.0	9000	3800	4300	5000
215	1217	0.17	3.7	5.8	11000	4550	4000	4800
303	1218	0.17	3.7	5.8	12900	5300	3800	4500
307	1220	0.18	3.6	5.5	15600	6700	3200	3800
315	1222	0.17	3.6	5.6	19600	8650	2800	3400
403	1224	0.20	3.11	4.81	27000	11800	2800	3400

NOTE:

Peq = F_R + YFA when $F_A / F_R \le e$

Peq = 0.65 F_R + YFA when $F_A / F_R > e$

$$L_{10} = \left(\frac{C}{P}\right)^3 \times \left(\frac{16667}{RPM}\right)$$

NOTE: For more information, see Page B15-36 thru B15-39

Shaft	Housing	Bearing No	A		B		C		R	
			Inch	(mm)	Inch	(mm)	Inch	(mm)	Inch	(mm)
107	509	1209K.C3	1.7717	45	3.3465	85	0.7480	19	0.043	1.1
111	510	1210K.C3	1.9685	50	3.5433	90	0.7874	20	0.043	1.1
115	511	1211K.C3	2.1654	55	3.9370	100	0.8268	21	0.059	1.5
203	513	1213K.C3	2.5591	65	4.7244	120	0.9055	23	0.059	1.5
207	515	1215K.C3	2.9528	75	5.1181	130	0.9843	25	0.059	1.5
211	516	1216K.C3	3.1496	80	5.5118	140	1.0236	26	0.079	2.0
215	517	1217K.C3	3.3465	85	5.9055	150	1.1024	28	0.079	2.0
303	518	1218K.C3	3.5433	90	6.2992	160	1.1811	30	0.079	2.0
307	520	1220K.C3	3.9370	100	7.0866	180	11.3386	34	0.083	2.1
315	522	1222K.C3	4.3307	110	7.8740	200	1.4960	38	0.083	2.1
403	524	1224K.C3	4.7244	120	8.4646	215	1.6535	42	0.083	2.1

FEATURES/BENEFITS PAGE B15-3	SPECIFICATION/HOW TO ORDER PAGE B15-7	NOMENCLATURE PAGE B15-8	SELECTION PAGE B15-13

SELECTION/DIMENSIONS



How to Order
USAF Smart Stock Selections

Step 1: The Housing Choices

All smart housings feature an embedded thermocouple.

When speed is monitored, select cast-closed end.

For temperature and/or vibration monitoring without speed, both sides open may be selected

For speed, as well as temperature and vibration monitoring, select cast closed end.

Stab rings are included with all housings.

Size	Housing Series	4B Both Sides Open Part No.	4B Cast Close End Part No.
207	515	**067501**	**067503**
215	517	**067509**	**067511**
307	520	**067517**	**067519**
315	522	**067520**	**067521**
407	526	**055572**	**055654**
415	528	**055734**	**055906**
515	534	**057958**	**055881**
615	538	**055876**	**057966**

Step 2: The Sensor Choices

For speed monitoring use AC prox

AND/OR For temperature monitoring, use thermocouple transmitter

USAF Sensor Kits	Part No.
AC Prox	**055940**
Thermocouple Transmitter	**055931**
4 - 20 ma Accelerometer and Thermocouple	**067576**

Step 3: Other Parts You Will Need To Order

If monitoring speed, you will need a special SNW. If you are not monitoring speed, you can use a standard SNW. Special SNW's feature a modified nut with prox targets

Bearings			Adapters			Seals				
Size	Bearing Series	Part No.	Size	Special SNW Part No.	Standard SNW Part No.	Size	TRIPLE-TECT Part No.	Drop-In TRIPLE-TECT Part No.	LER Part No.	Taconite Part No.
207	22215K	**422001**	207	**055740**	**046354**	207	**043542**	**039538**	**042514**	**042380**
215	22217K	**422005**	215	**055710**	**046358**	215	**043546**	**039530**	**042518**	**042382**
307	22220K	**422009**	307	**055714**	**046361**	307	**043549**	**039859**	**042521**	**042383**
315	22222K	**422011**	315	**055712**	**046363**	315	**043551**	**039861**	**042523**	**042384**
407	22226K	**422015**	407	**055716**	**046431**	407	**043554**	**039864**	**042526**	**042385**
415	22228K	**422017**	415	**055907**	**046433**	415	**043556**	**039866**	**042528**	**042387**
515	22234K	**422023**	515	**055898**	**043620**	515	**043560**	**N/A**	**042533**	**042389**
615	22238K	**422027**	615	**067326**	**043624**	615	**043564**	**N/A**	**042537**	**042392**

For additional details on DODGE Smart Bearings, see brochure DMR 2026-6



SAF-XT and SAFS Spherical Roller Bearings

DODGE SAF-XT, and SAFS Spherical Roller Bearings have the capacity to carry heavy radial loads, thrust loads and combined radial and thrust loads. The maximum recommended load which can be applied is limited by various components in the system such as bearing, housing, shaft, shaft attachment, speed and life requirements as listed in this catalog. DODGE Spherical Roller Bearings have been applied successfully when these limits have been exceeded under controlled operating conditions. Contact DODGE Application Engineering (864-284-5700) for applications which exceed the recommendations of this catalog.

Select a bearing from the SAF-XT, and SAFS Spherical Roller Bearing Selection Chart having a radial load rating at the operating speed equal to or greater than the calculated Equivalent Radial Load for a desired L_{10} life. This simple method is all that is required for the majority of general applications and provides for occasional average shock loads.

L_{10} Hours Life - The life which may be expected from at least 90% of a given group of bearings operating under identical conditions.

For L_{10} hours life other than those listed in the selection chart, multiply the Equivalent Radial Load by one of the following factors. For 20,000 L_{10} hours life use factor of .88; 40,000, 1.09; 60,000, 1.23; 80,000, 1.34. Then select a bearing from the bold face (30,000) L_{10} ratings only in the selection chart having a rating equal to or greater than this value.

Heavy Service - For heavy shock loads, frequent shock loads, or severe vibrations, add up to 50% (according to severity of conditions) to the Equivalent Radial Load to obtain a Modified Equivalent Radial Load. Consult DODGE Application Engineering for additional selection assistance.

Thrust load values shown in the table below are recommended as a guide for general applications that will give adequate L_{10} life. Where substantial radial load is also present, it is advisable to calculate actual L_{10} life to assure that it meets the requirements. The maximum thrust load should not exceed SAF-XT adapter maximum allowable thrust load (Table 8 on page B15-57) nor the pillow block limits shown on page B15-58. The effectiveness of the shaft attachment to carry thrust load depends on proper tightening of the adapter and shaft deflections.

RPM	20-200	201 - 2000	Over2000
RECOMMENDED THRUST LOAD	C/20	C/40	C/60

* Compare thrust load to adapter maximum allowed thrust load. If this value is exceeded, auxiliary method of carrying thrust load is required.

The shaft tolerances recommended (page B15-9) are adequate for normal radial and radial/thrust load applications. Since the allowable load, especially at a low speed, is very large, the shaft should be checked to assure adequate shaft strength.

The magnitude and direction of both the thrust and radial load must be taken into account when selecting a housing. When pillow blocks are utilized, heavy loads should be directed through the base. Where uplift loads are involved, consult DODGE Applications Engineering for recommendations. Where a load pulls the housing away from the mounting base, both the hold-down bolts and housing must be of adequate strength. Auxiliary load carrying devices such as shear bars are advisable for side or end loading of pillow blocks.

To determine the L_{10} hours life for loads and RPM's not listed, use the following equation:

$$L_{10}\ \text{Life, Hours} = \left(\frac{C}{P}\right)^{10/3} X \left(\frac{16667}{RPM}\right)$$

Where:

C = Dynamic Capacity (Table 14 on page B15-76), lbs.

P = Equivalent Radial Load, lbs.

SELECTION/DIMENSIONS



SAF-XT/SAFS Bearings

When the load on a two row roller bearing is solely a radial load with no thrust (axial) load, the load is shared equally by both rows of rollers and the equivalent radial load (P) is equal to the actual radial load. However, when a thrust load is applied, the loading on the two rows is shared unequally, depending on the ratio of thrust to radial load. The use of the X (radial factor) and Y (thrust factor) from Table 8 converts the actual applied loads to an equivalent radial load having the same effect on the life of the bearing as a radial load of this magnitude.

Equation 1

The equivalent radial load P = XFR + YFA

Where:

P = Equivalent radial load, lbs

F_R = Radial load, lbs.

F_A = Thrust (axial) load, lbs. (** See Note below)

e = Thrust load or radial load factor (Table 14)

X = Radial load factor (Table 14)

Y = Thrust load factor (Table 14)

To find X and Y, first calculate F_A/F_R and compare to e. Determine X and Y from Table 10: Light thrust F_A/F_R less than or equal to e or heavy thrust F_A/F_R greater than e.

Substitute all known values into the equivalent radial load equation. P (equivalent radial load) thus determined can be used in the life formula to determine L_{10}, or it can be compared to the allowable equivalent radial load ratings for the speed and hours life desired in the expanded rating table on B15-58 and B15-59.

****NOTE:** Spherical bearings require a radial load at least equal to the thrust load for proper operation $F_A/F_R = 1$. If the thrust load exceeds this limit, consult DODGE Application Engineering.

L_{10} Life Adjustment - The calculated L_{10} life obtained from the above procedure is subject to life adjustment factors in accordance with ABMA standards. Consult DODGE Application Engineering for assistance.



Table 8: Radial and Thrust Factors

Shaft Size Inch	Basic Bearing Description	e	$F_A/F_R \leq e$		$F_A/F_R \geq e$		★ Adapter. Max. Allow. Thrust Load F_A (LBS.)	Dynamic Capacity (C) Lbs.	Static Capacity Co Lbs.	Max. Rpm	
			X	Y	X	Y				Grease	Oil ▲
1-15/16	22211K	0.23	1.00	2.90	0.67	4.30	927	31,500	32,500	4500	5600
2-3/16	22213K	0.24	1.00	2.80	0.67	4.20	1359	45,500	47,500	3800	4500
2-7/16, 2-1/2	22215K	0.22	1.00	3.10	0.67	4.60	1568	48,000	53,000	3400	4300
2-11/16, 2-3/4	22216K	0.22	1.00	3.10	0.67	4.60	1780	56,000	60,000	3200	4000
2-15/16, 3	22217K	0.22	1.00	3.00	0.67	4.50	2063	68,000	73,500	3000	3800
3-3/16	22218K	0.23	1.00	2.90	0.67	4.30	2429	78,000	85,000	2600	3400
3-7/16, 3-1/2	22220K	0.24	1.00	2.80	0.67	4.20	3102	96,500	106,000	2200	3000
3-15/16, 4	22222K	0.25	1.00	2.70	0.67	4.10	3931	122,000	134,000	2000	2800
4-3/16	22224K	0.25	1.00	2.70	0.67	4.00	4693	143,000	166,000	1900	2400
4-7/16, 4-1/2	22226K	0.26	1.00	2.60	0.67	3.90	5610	170,000	200,000	1800	2200
4-15/16, 5	22228K	0.25	1.00	2.70	0.67	4.00	6419	196,000	236,000	1700	2000
5-3/16	22230K	0.25	1.00	2.70	0.67	4.00	7383	228,000	275,000	1600	1900
5-7/16, 5-1/2	22232K	0.26	1.00	2.60	0.67	3.90	8630	260,000	315,000	1500	1800
5-15/16, 6	22234K	0.26	1.00	2.60	0.67	3.90	9858	300,000	355,000	1300	1700
6-7/16, 6-1/2	22236K	0.25	1.00	2.70	0.67	4.00	10437	305,000	375,000	1300	1600
6-15/16, 7	22238K	0.28	1.00	2.40	0.67	3.60	11786	270,000	415,000	1200	1300
7-1/2, 7-15/16, 8	22244K	0.29	1.00	2.30	0.67	3.50	16020	365,000	550,000	950	1000
8-7/16, 8-1/2, 8-15/16, 9	23048K	0.25	1.00	2.70	0.67	4.10	14887	260,000	490,000	800	1000
9-7/16, 9-1/2	23052K	0.26	1.00	2.60	0.67	3.90	18232	340,000	630,000	750	950
9-15/16, 10, 10-7/16, 10-1/2	23056K	0.25	1.00	2.70	0.67	4.10	20012	345,000	670,000	700	900

Comparing Spherical to Tapered Roller Bearing: The dynamic capacity C (spherical) and C90 (taper) are not to the same base. To compare basic dynamic capacities multiply C x .259 and compare to C90. To select and then compare, use the complete selection procedure for each bearing and then compare

▲ For shaft size 1-7/16 through 4-3/16 inclusive TRIPLE-TECT seals will perform like LER seals when operating above the grease speed limit

★ If thrust load exceeds adapter maximum allowable thrust load, auxiliary method of carrying thrust load required.

SELECTION/DIMENSIONS



SAF-XT and SAFS Spherical Roller Bearings

Table 9: Selection Table

Shaft Size		L_{10} Life Hours	Allowable Equivalent Radial Load Rating (Lbs.) at Various Revolutions Per Minute															
Adapter Mount (Inches)	Bearing Series		50	100	250	500	750	950	1,300	1,500	1,800	2,000	2,600	3,000	3,200	3,400	4500	5,600
1-15/16	22211	10,000	11,355	9,223	7,006	5,691	5,039	4,694	4,273	4,093	3,875	3,755	3,470	3,325	3,261	3,202	2,944	2,757
		30,000	**8,167**	**6,633**	**5,039**	**4,093**	**3,624**	**3,376**	**3,073**	**2,944**	**2,787**	**2,700**	**2,496**	**2,391**	**2,345**	**2,303**	**2,117**	**1,983**
		60,000	6,633	5,388	4,093	3,325	2,944	2,742	2,496	2,391	2,264	2,193	2,027	1,942	1,905	1,871	1,720	1,611
2 -3/16	22213	10,000	16,401	13,322	10,120	8,220	7,279	6,780	6,171	5,912	5,597	5,423	5,013	4,802	4,710	4,625	4,252	
		30,000	**11,796**	**9,581**	**7,279**	**5,912**	**5,235**	**4,877**	**4,439**	**4,252**	**4,026**	**3,901**	**3,605**	**3,454**	**3,388**	**3,327**	**3,058**	
		60,000	9,581	7,783	5,912	4,802	4,252	3,961	3,605	3,454	3,270	3,168	2,928	2,805	2,752	2,702	2,484	
2-7/16 2-1/2	22215	10,000	17,302	14,054	10,676	8,672	7,679	7,153	6,511	6,237	5,905	5,721	5,288	5,066	4,969	4,879		
		30,000	**12,444**	**10,108**	**7,679**	**6,237**	**5,523**	**5,145**	**4,683**	**4,486**	**4,247**	**4,115**	**3,803**	**3,644**	**3,574**	**3,509**		
		60,000	10,108	8,210	6,237	5,066	4,486	4,179	3,803	3,644	3,450	3,342	3,089	2,959	2,903	2,850		
2-11/16 2-3/4	22216	10,000	20,186	16,396	12,456	10,117	8,958	8,345	7,596	7,276	6,889	6,675	6,170	5,910	5,797	5,692		
		30,000	**14,518**	**11,793**	**8,958**	**7,276**	**6,443**	**6,002**	**5,463**	**5,233**	**4,955**	**4,801**	**4,437**	**4,251**	**4,169**	**4,094**		
		60,000	11,793	9,579	7,276	5,910	5,233	4,875	4,437	4,251	4,025	3,899	3,604	3,453	3,387	3,325		
2-15/16 3	22217	10,000	24,512	19,910	15,125	12,285	10,878	10,133	9,223	8,836	8,365	8,105	7,492	7,177	7,039	6,912		
		30,000	**17,629**	**14,320**	**10,878**	**8,836**	**7,824**	**7,288**	**6,634**	**6,355**	**6,017**	**5,829**	**5,388**	**5,162**	**5,063**	**4,971**		
		60,000	14,320	11,631	8,836	7,177	6,355	5,920	5,388	5,162	4,887	4,735	4,377	4,193	4,112	4,038		
3 -3/16	22218	10,000	28,116	22,838	17,349	14,092	12,478	11,623	10,580	10,135	9,596	9,297	8,593	8,232	8,074	7,929		
		30,000	**20,222**	**16,425**	**12,478**	**10,135**	**8,974**	**8,360**	**7,609**	**7,289**	**6,901**	**6,687**	**6,180**	**5,921**	**5,807**	**5,703**		
		60,000	16,425	13,342	10,135	8,232	7,289	6,790	6,180	5,921	5,606	5,431	5,020	4,809	4,717	4,632		
3-7/16 3-1/2	22220	10,000	34,785	28,254	21,464	17,434	15,437	14,380	13,089	12,539	11,871	11,502	10,631	10,185				
		30,000	**25,018**	**20,321**	**15,437**	**12,539**	**11,103**	**10,343**	**9,414**	**9,018**	**8,538**	**8,273**	**7,646**	**7,325**				
		60,000	20,321	16,506	12,539	10,185	9,018	8,401	7,646	7,325	6,935	6,719	6,211	5,950				
3-15/16 4	22222	10,000	43,977	35,720	27,135	22,041	19,516	18,180	16,548	15,852	15,008	14,541	13,441					
		30,000	**31,629**	**25,691**	**19,516**	**15,852**	**14,037**	**13,076**	**11,901**	**11,401**	**10,794**	**10,459**	**9,667**					
		60,000	25,691	20,868	15,852	12,876	11,401	10,621	9,667	9,261	8,768	8,495	7,852					
4 -3/16	22224	10,000	51,547	41,869	31,806	25,835	22,876	21,310	19,396	18,581	17,592	17,045						
		30,000	**37,074**	**30,113**	**22,876**	**18,581**	**16,453**	**15,326**	**13,950**	**13,364**	**12,652**	**12,259**						
		60,000	30,113	24,460	18,581	15,092	13,364	12,449	11,331	10,855	10,277	9,957						
4-7/16 4-1/2	22226	10,000	61,279	49,774	37,812	30,712	27,195	25,333	23,058	22,089	20,913	20,263						
		30,000	**44,074**	**35,799**	**27,195**	**22,089**	**19,559**	**18,220**	**16,584**	**15,887**	**15,041**	**14,573**						
		60,000	35,799	29,078	22,089	17,942	15,887	14,799	13,470	12,904	12,217	11,837						
4-15/16 5	22228	10,000	70,652	57,387	43,594	35,410	31,354	29,208	26,585	25,467	24,112	23,362						
		30,000	**50,814**	**41,274**	**31,354**	**25,467**	**22,551**	**21,007**	**19,120**	**18,317**	**17,342**	**16,802**						
		60,000	41,274	33,525	25,467	20,686	18,317	17,063	15,530	14,878	14,086	13,648						
5 -3/16	22230	10,000	82,187	66,756	50,712	41,191	36,473	33,976	30,925	29,625	28,049	27,176						
		30,000	**59,111**	**48,013**	**36,473**	**29,625**	**26,232**	**24,436**	**22,242**	**21,307**	**20,173**	**19,545**						
		60,000	48,013	38,998	29,625	24,063	21,307	19,849	18,066	17,307	16,386	15,876						
5 -7/16 5 -/2	22232	10,000	93,722	76,126	57,829	46,972	41,592	38,745	35,265	33,783	31,985							
		30,000	**67,407**	**54,751**	**41,592**	**33,783**	**29,914**	**27,866**	**25,364**	**24,298**	**23,004**							
		60,000	54,751	44,472	33,783	27,441	24,298	22,634	20,602	19,736	18,685							

Note: Dark Shaded Areas Require Circulating Oil
Light Shaded Areas Require Static Oil



SAF-XT and SAFS Spherical Roller Bearings

Table 9 (Continued): Selection Table

Shaft Size		L_{10} Life Hours	Allowable Equivalent Radial Load Rating (Lbs.) at Various Revolutions Per Minute															
Adapter Mount (Inches)	Bearing Series		50	100	250	500	750	950	1,300	1,500	1,800	2,000	2,600	3,000	3,200	3,400	4500	5,600
5 -15/16 6	22234	10,000	108,140	87,837	66,726	54,199	47,991	44,706	40,691	38,981								
		30,000	**77,777**	**63,175**	**47,991**	**38,981**	**34,516**	**32,153**	**29,266**	**28,036**								
		60,000	63,175	51,314	38,981	31,662	28,036	26,117	23,771	22,772								
6 -7/16 6 1/2	22236	10,000	109,943	89,301	67,838	55,102	48,791	45,451	41,369	39,631								
		30,000	**79,073**	**64,227**	**48,791**	**39,631**	**35,092**	**32,689**	**29,753**	**28,503**								
		60,000	64,227	52,169	39,631	32,190	28,503	26,552	24,167	23,152								
6 -15/16 7	22238	10,000	97,326	79,053	60,054	48,779	43,192	40,235	36,622									
		30,000	**69,999**	**56,857**	**43,192**	**35,083**	**31,065**	**28,938**	**26,339**									
		60,000	56,857	46,182	35,083	28,496	25,232	23,505	21,394									
7 -3/16	22240	10,000	108,140	87,837	66,726	54,199	47,991	44,706										
		30,000	**77,777**	**63,175**	**47,991**	**38,981**	**34,516**	**32,153**										
		60,000	63,175	51,314	38,981	31,662	28,036	26,117										
7 -1/2 7 -15/16 8	22244	10,000	131,571	106,869	81,184	65,942	58,389	54,392										
		30,000	**94,629**	**76,862**	**58,389**	**47,427**	**41,995**	**39,120**										
		60,000	76,862	62,432	47,427	38,522	34,110	31,775										
8- 7/16 8- 15/16 9	23048	10,000	93,722	76,126	57,829	46,972	41,592	38,745										
		30,000	**67,407**	**54,751**	**41,592**	**33,783**	**29,914**	**27,866**										
		60,000	54,751	44,472	33,783	27,441	24,298	22,634										
9- 7/16 9-1/2	23052	10,000	122,559	99,549	75,623	61,425	54,390	50,666										
		30,000	**88,147**	**71,598**	**54,390**	**44,178**	**39,118**	**36,440**										
		60,000	71,598	58,155	44,178	35,884	31,774	29,599										
9 -15/16 10 10 -7/16 10-1/2	23056	10,000	124,361	101,013	76,735	62,328	55,190											
		30,000	**89,444**	**72,651**	**55,190**	**44,828**	**39,694**											
		60,000	72,651	59,011	44,828	36,412	32,241											

Note: Dark Shaded Areas Require Circulating Oil
Light Shaded Areas Require Static Oil

SELECTION/DIMENSIONS



Pillow Block Housing Permissible Thrust Load*

(lbs Maximum)

Shaft Size - Inches	HSG. No.	Bearing Type			
		SAF-XT		SAFS	
		2-Bolt	4-Bolt	2-Bolt	4-Bolt
1-3/16	507	-	-	2900	-
1-7/16	509	-	-	3100	-
1-11/16	510	-	-	2800	-
1-15/16	511	4700	-	4600	-
2-3/16	513	4800	-	4800	-
2-7/16, 2-1/2	515	4500	5600	4500	5600
2-11/16, 2-3/4	516	6900	9300	6900	9300
2-15/16, 3	517	6500	8700	6500	8700
3-3/16	518	6600	9000	6600	9000
3-7/16, 3-1/2	520	5500	13400	5500	13400
3-15/16, 4	522	-	13300	-	13300
4-3/16	524	-	12500	-	12500
4-7/16, 4-1/2	526	-	9700	-	9800
4-15/16, 5	528	-	14700	-	14700
5-3/16	530	-	14800	-	14800
5-7/16, 5-1/2	532	-	14000	-	14000
5-15/16, 6	534	-	14400	-	14300
6-7/16, 6-1/2	536	-	14200	-	14300
6-15/16, 7	538	-	22800	-	22800
7-1/2, 7-15/16, 8	544	-	32000	-	32000
8-7/16, 8-1/2, 8-15/16, 9	48	-	23000	-	23000
9-7/16, 9-1/2	52	-	32000	-	32000
9-15/16, 10, 10-7/16, 10-1/2	56	-	55000	-	59000

1. When utilizing heavy thrust loads on pillow block housings, the installation will require proper mounting procedures.
2. The pillow block base bolts must be of adequate strength (Grade 8) and properly tightened to the mounting structure.
3. The use of stop bars (shear strips) against pillow block mounting base is required.
4. Shaft shoulder, snap rings or thrust collars should be used to locate the inner ring on the shaft.
5. In all cases where thrust loads are large, the L_{10} Life of the bearing should be checked for proper selection and life requirements.

* Spherical bearings require a radial load at least equal to the thrust load for proper operation $F_A/F_R \leq 1$. If the thrust load exceeds this limit, consult DODGE Application Engineering.

DODGE



SAFS Steel Housing Pillow Blocks
(22200K/2300K ADAPTER MOUNT BEARING)

LUBE NOTE
All Sizes Use A 1/8-27 NPT Hydraulic Grease Fitting

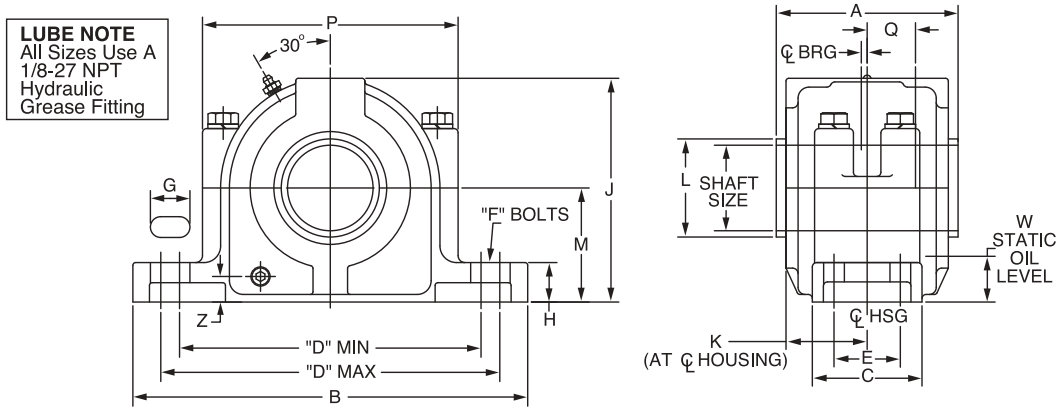

Shaft Size Inch ▲	Housing No.	Part Numbers				Approx. Wt. lbs.	A with Seals			B	C
		SAFS 2-Bolt		SAFS 4-Bolt			Std.	Optional			
		Complete Pillow Block ★	Housing Only	Complete Pillow Block ★	Housing Only		TRIPLE-TECT	LER/ER	Aux.		
2-7/16	515	**042400**	**042425**	**042410**	**042428**	24	5.16	4.67	7.44	11.25	3.13
2-1/2	515	**042401**	**042425**	**042411**	**042428**						
2-11/16	516	**042407**	**044231**	**042408**	**044232**	32	5.42	4.80	7.63	13.00	3.50
2-3/4	516	**042420**	**044231**	**042421**	**044232**						
2-15/16	517	**042402**	**042433**	**042412**	**042436**	35	5.61	4.98	7.80	13.00	3.50
3	517	**042403**	**042433**	**042413**	**042436**						
3-3/16	518	**042424**	**044233**	**042430**	**044234**	44	6.14	5.63	8.00	13.75	3.88
3-7/16	520	**042404**	**042440**	**042414**	**042443**	74	6.41	5.81	8.50	15.25	4.38
3-1/2	520	**042405**	**042440**	**042415**	**042443**						
3-15/16	522	-	-	**042416**	**042450**	97	6.86	6.38	8.64	16.50	4.75
4	522			**042417**	**042450**						
4-3/16	524	-	-	**042432**	**044235**	120	8.03	7.44	8.89	16.50	4.75
4-7/16	526	-	-	**042568**	**042455**	160	8.47	7.88	9.45	18.38	5.13
4-1/2	526			**042575**	**042455**						
4-15/16	528	-	-	**042569**	**042460**	175	8.09	7.50	10.33	20.13	5.88
5	528			**042576**	**042460**						
5-3/16	530	-	-	**042439**	**044236**	220	8.75	8.16	10.69	21.25	6.25
5-7/16	532	-	-	**042570**	**042465**	245	9.22	8.63	10.45	22.00	6.25
5-1/2	532			**042577**	**042465**						
5-15/16	534	-	-	**042571**	**042469**	310	9.91	9.13	11.88	24.75	6.75
6	534			**042578**	**042469**						
6-7/16	536	-	-	**042572**	**042468**	345	10.34	9.63	11.39	26.75	7.13
6-1/2	536			**042579**	**042468**						
6-15/16	538	-	-	**042573**	**042472**	400	10.84	10.13	11.16	28.00	7.50
7	538			**042580**	**042472**						
7-1/2	544	-	-	**042446**	**042477**	640	12.09	11.63	13.20	32.75	8.75
7-15/16	544			**042581**	**042477**						
8	544			**042574**	**042477**						

★ Includes: (1) housing with Spacers, (1) Standard Spherical Bearing, (1) SNW Assembly (SNP above 8") and (2) TRIPLE-TECT Seals unless otherwise noted.

▲ Sizes not listed will be quoted on application
SAFS 2-Bolt Pillow Block (P2B-SAFS - - -)
SAFS 4-Bolt Pillow Block (P4B-SAFS - - -)

FEATURES/BENEFITS PAGE B15-3	SPECIFICATION/HOW TO ORDER PAGE B15-7	NOMENCLATURE PAGE B15-8	SELECTION PAGE B15-13

SELECTION/DIMENSIONS

SAFS Steel Housing Pillow Blocks

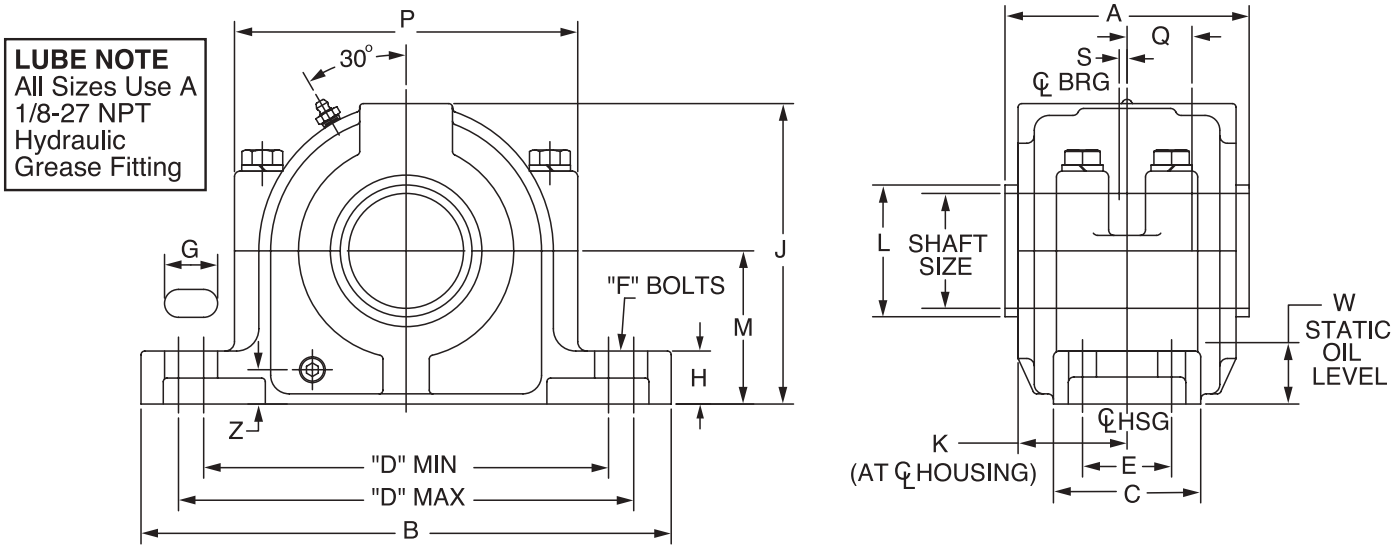



SAFS Steel Housing Pillow Blocks

Shaft Size Inch	Dimension D				E	Bolt Dia. F		G	H	J	K	L ■	M	P	Q ✦	S ★	W	Z
	2-Bolt		4-Bolt			2B	4B											
	Min.	Max.	Min.	Max.														
2-7/16 2-1/2	8.75	9.50	8.63	9.63	1.88	5/8	1/2	1.13	1.25	6.44	2.31	2.80	3.25	7.06	1.34	0.13	1.16	0.63
2-11/16 2-3/4	10.13	10.63	9.88	10.88	2.13	3/4	5/8	1.25	1.50	6.88	2.38	3.17	3.50	8.00	1.47	0.19	1.25	0.63
2-15/16 3	10.25	10.75	10.00	11.00	2.13	3/4	5/8	1.13, 2B 1.25, 4B	1.50	7.38	2.47	3.42	3.75	8.25	1.56	0.19	1.38	0.75
3-3/16	10.75	11.25	10.50	11.50	2.13	3/4	5/8	1.25	1.63	7.75	2.75	3.69	4.00	8.25	1.70	0.19	1.47	0.69
3-7/16 3-1/2	11.88	12.63	11.75	12.75	2.38	7/8	3/4	1.38	1.75	8.75	2.91	3.83	4.50	9.81	1.89	0.19	1.64	0.94
3-15/16 4	-	-	12.88	14.13	2.75	-	3/4	1.50	2.00	9.63	3.13	4.33	4.94	10.63	2.08	0.19	1.80	1.13
4-3/16	-	-	13.25	14.50	2.75	-	3/4	1.50	1.75	10.25	3.66	4.59	5.25	11.50	2.22	0.19	1.84	1.00
4-7/16 4-1/2	-	-	14.50	16.00	3.25	-	7/8	1.75	2.50	11.56	3.88	4.94	6.00	12.81	2.41	0.19	2.34	1.28
4-15/16 5	-	-	15.63	17.38	3.78	-	1	2.00	2.50	12.00	3.69	5.36	6.00	13.56	2.53	0.19	2.03	1.19
5-3/16	-	-	16.75	18.50	3.75	-	1	2.00	2.50	12.81	4.06	5.77	6.31	14.50	2.69	0.19	2.03	1.19
5-7/16 5-1/2	-	-	17.38	19.13	3.75	-	1	2.00	2.75	13.69	4.25	5.88	6.69	15.13	2.89	0.19	2.09	1.22
5-15/16 6	-	-	19.38	21.63	4.25	-	1	2.00	2.88	14.56	4.63	6.44	7.06	16.81	3.13	0.19	2.19	1.56
6-7/16 6-1/2	-	-	21.38	23.13	4.63	-	1	2.00	3.00	15.25	4.81	6.80	7.50	17.19	3.08	0.19	2.42	1.09
6-15/16 7	-	-	22.13	23.88	4.50	-	1-1/4	2.25	3.13	16.13	5.13	7.38	7.88	17.08	3.23	0.19	2.53	1.31
7-1/2 7-15/16 8	-	-	25.13	27.88	5.25	-	1-1/2	3.00	3.88	19.25	5.75	7.44 8.33	9.50	20.75	3.64	0.19	3.25	1.88

✦ Distance shaft should extend beyond housing centerline of pillow block is closed end style.

★ Non-expansion bearing offset from centerline. For Expansion Bearing S = 0.

■ Based on TRIPLE-TECT seals.

Bearing Reference Guide

E-Family Roller Bearings

Specialty Tapered Products

S-2000

UNISPHERE II

IMPERIAL

UNIFIED SAF

FEATURES/BENEFITS PAGE B15-3	SPECIFICATION/HOW TO ORDER PAGE B15-7	NOMENCLATURE PAGE B15-8	SELECTION PAGE B15-13

SELECTION/DIMENSIONS

DODGE



SAF-XT Pillow Blocks - 2-Bolt Base (22200K Adapter Mount Bearings)

LUBE NOTE:
All Sizes Use A 1/8-27 NPT Hydraulic Grease Fitting

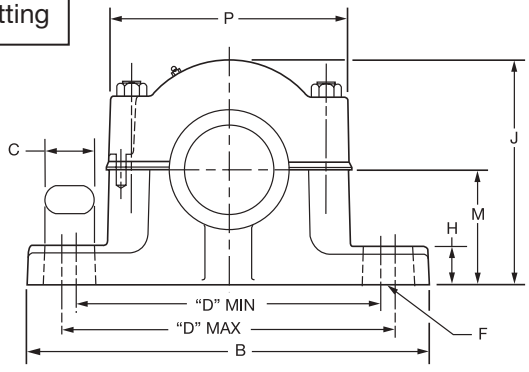

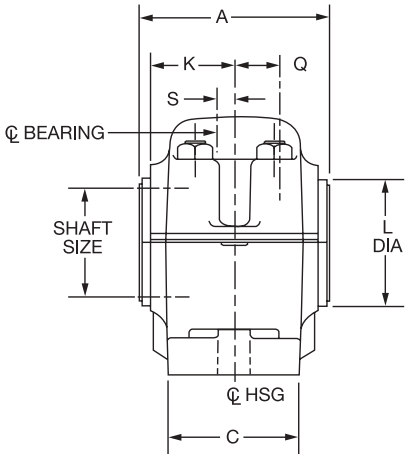

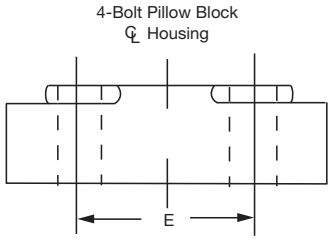

(22200K Adapter Mount Bearing)

Shaft Size ▲ Inch	Complete Pillow Block Desig SAF-XT	Part No. ★	Wt.	A			B	C	D		Bolt Dia. F	G	H	J	K	L ♥	M	P	Q ✦	S CL of Housing to CL of Bearing	
				Std. TRIPLE-TECT	Optional LER	Optional AUX.			Min.	Max.										Exp. Block	Non-Exp. Block
1-15/16	22511	**042001**	17.3	4.14	3.6.3	5.55	9.63	2.75	7.50	7.75	5/8	0.88	0.94	5.25	1.84	2.30	2.75	5.63	0.97	0.19	0.30
2-3/16	22513	**042002**	23.8	4.53	4.00	5.81	11.00	3.13	8.25	9.38	5/8	1.31	1.00	5.94	2.03	2.55	3.00	6.41	1.13	0.25	0.39
2-7/16	22515	**042003**	29.7	4.91	4.42	7.44	11.25	3.13	8.75	9.50	5/8	1.12	1.25	6.44	2.19	2.80	3.25	7.00	1.20	0.16	0.27
2-1/2		**042004**	29.6																		
2-11/16	22516	**042005**	36.3	5.23	4.61	7.63	13.00	3.50	10.13	10.63	3/4	1.12	1.50	6.88	2.28	3.69	3.50	7.94	1.28	0.19	0.38
2-3/4		**042006**	36.1																		
2-15/16	22517	**042007**	42.3	5.48	4.86	7.88	13.00	3.50	10.25	10.75	3/4	1.12	1.50	7.38	2.41	3.42	3.75	7.94	1.38	0.19	0.38
3		**042008**	42.1																		
3-3/16	22518	**042009**	52.5	5.95	5.44	8.00	13.75	3.88	10.75	11.25	3/4	1.12	1.63	7.75	2.66	3.69	4.00	8.44	1.41	0.30	0.48
3-7/16	22520	**042010**	69.5	6.22	5.63	8.50	15.25	4.38	11.88	12.63	7/8	1.38	1.75	8.75	2.75	3.83	4.50	9.44	1.53	0.38	0.56
3-1/2		**042011**	69.2																		

▲ Sizes not listed will be quoted on application.

★ Furnished unless otherwise specified. Includes (1) Housing with Spacer, (1) Standard Spherical Bearing, (1) SNW Assembly and (2) TRIPLE-TECT Seals.

✦ Distance shaft should extend beyond housing centerline (C_L) if pillow block is closed end style.

♥ Dimensions shown with TRIPLE-TECT seals installed.

NOTE: SAF-XT Pillow Blocks use UNIFIED adaptors, seals and bearings. All UNIFIED 500 Series accessories are available for use with SAF-XT except Drop-In TRIPLE-TECT and SPLIT-SPHER which are UNIFIED exclusives.

FEATURES/BENEFITS PAGE B15-3	SPECIFICATION/HOW TO ORDER PAGE B15-7	NOMENCLATURE PAGE B15-8	SELECTION PAGE B15-13

DODGE



SAF-XT Pillow Blocks - 4-Bolt Base (22200K/23000K Adapter Mount Bearings)

Shaft Size ▲ Inch	Complete Pillow Block Desig SAF-XT	Part No. ★ P4B-SFXT	Wt.	A			B	C	D		E	Bolt Dia. F	G	H	J	K	L ♥	M	P	Q ✦	S C_L of Housing to C_L of Bearing	
				Std.	Optional				Min.	Max.											Exp	Non-Exp
				TRIPLE-TECT	LER	AUX.																
2-7/16	22515	**042015**	29.7	4.91	4.42	7.44	11.25	3.13	8.63	9.63	1.88	1/2	1.13	1.25	6.44	2.19	2.80	3.25	7.00	1.20	0.16	0.27
2-1/2		**042016**	29.6																			
2-11/16	22516	**042017**	36.3	5.23	4.61	7.63	13.00	3.50	9.08	10.88	2.13	5/8	1.25	1.50	6.88	2.28	3.17	3.50	7.94	1.28	0.19	0.38
2-3/4		**042030**	36.1																			
2-15/16	22517	**042019**	42.3	5.48	4.86	7.88	13.00	3.50	10.00	11.00	2.13	5/8	1.25	1.50	7.38	2.41	3.42	3.75	7.94	1.38	0.19	0.38
3		**042020**	42.1																			
3-3/16	22518	**042021**	52.5	5.95	5.44	8.00	13.75	3.88	10.50	11.50	2.13	5/8	1.25	1.63	7.75	2.66	3.69	4.00	8.44	1.41	0.59	0.48
3-7/16	22520	**042022**	69.5	6.22	5.63	8.50	15.25	4.38	11.75	12.75	2.38	3/4	1.38	1.75	8.75	2.75	3.83	4.50	9.44	1.53	0.38	0.56
3-1/2		**042023**	69.2																			
3-15/16	22522	**042024**	92.9	6.80	6.31	8.64	16.50	4.75	12.88	14.13	2.75	3/4	1.50	2.00	9.63	3.03	4.33	4.94	10.56	1.73	0.38	0.55
4		**042025**	92.6																			
4-3/16	22524	**042270**	101.8	6.97	6.38	8.89	16.50	4.75	13.25	14.50	2.75	3/4	1.50	1.75	10.25	3.06	4.59	5.25	10.81	1.81	0.42	0.61
4-7/16	22526	**042271**	148	7.41	6.81	9.45	18.38	5.13	14.50	16.00	3.25	7/8	1.75	2.50	11.69	3.28	4.94	6.00	11.63	1.95	0.45	0.64
4-1/2		**042272**	147.7																			
4-15/16	22528	**042273**	173.9	7.66	7.06	10.33	20.13	5.88	15.63	17.38	3.38	1	2.00	23.50	12.13	3.41	5.36	6.00	12.44	2.05	0.50	0.69
5		**042274**	173.6																			
5-3/16	22530	**042282**	215	7.97	7.38	10.64	21.25	6.25	16.75	18.50	3.75	1	2.00	2.50	12.31	3.56	5.77	6.31	13.56	2.14	0.56	0.75
5-7/16	22532	**042283**	245	8.28	7.69	10.45	22.00	6.25	17.38	19.13	3.75	1	2.00	2.75	13.69	3.72	5.88	6.69	14.19	2.33	0.58	0.77
5-1/2		**042284**	244																			
5-15/16	22534	**042303**	300	8.66	7.94	10.70	24.75	6.75	19.63	21.38	4.25	1	2.00	2.88	14.56	3.84	6.44	7.06	16.31	2.47	0.58	0.78
6		**042304**	299																			
6-7/16	22536	**042305**	372	8.84	8.13	11.39	26.75	7.13	21.38	23.13	4.63	1	2.00	3.00	15.25	3.94	6.80	7.50	17.88	2.53	0.55	0.75
6-1/2		**042306**	371																			
6-15/16	22538	**042307**	407	9.34	8.63	11.47	28.00	7.50	22.13	23.88	4.50	1-1/4	2.25	3.13	16.00	4.19	7.38	7.88	18.31	2.61	0.63	0.81
7		**042308**	406																			
7-1/2	22544	**042309**	626	10.66	9.94	13.20	32.75	8.75	25.13	27.88	5.25	1-1/2	3.00	3.88	19.25	4.84	7.94	9.50	20.63	2.92	0.72	0.72
7-15/16	22544	**042370**	625	10.66	9.94	13.20	32.75	8.75			5.25	1-1/2	3.00	3.88	19.25	4.84	8.33	9.50	20.63	2.92	0.72	0.72
8		**042371**	624																			
8-7/16	23048	**042372†**	408	10.50	9.06	12.58	28.75	8.00	22.50	25.00	5.00	1-1/4	2.75	3.25	17.06	4.41	9.33	8.25	18.31	2.94	0.78	0.78
8-1/2		**042373**	407																			
8-15/16		**042374**	406																			
9		**042375**	405																			
9-7/16	23052	**042377**	624	10.36	9.94	13.45	32.75	8.75	25.13	27.89	5.25	1-1/2	3.00	3.88	19.25	4.84	9.98	9.50	20.63	3.22	0.70	0.70
9-1/2		**422556**																				
9-15/16	2356	**042378 •**	707	13.77	12.50	15.70	32.00	11.25	25.75	27.75	7.25	1-3/4	2.88	4.00	19.88	6.16	10.38	9.50	20.75	3.81	0.88	0.88
10		**042376**																				
10-7/16		**042379 •**																				
10-1/2		**422572 •**																				

▲ Sizes not listed will be quoted on application.

★ Includes (1) Housing with Spacer, (1) Standard Spherical Bearing, (1) SNW Assembly (SNP above 8,) and (2) TRIPLE-TECT Seals unless otherwise noted

✦ Distance shaft should extend beyond housing centerline (C_L) if pillow block is closed end style.

♥ Dimensions shown with TRIPLE-TECT seals installed.

● Made-To-Order - Consult DODGE for delivery

† Assembled to order. Consult DODGE for delivery

NOTE: SAF-XT Pillow Blocks use USAF 500 adaptors, seals, and bearings. Part numbers for these individual components can be found on Pages B15-26 thru B15-39.
All USAF 500 Series accessories are available for use with SAF-XT except Drop-In TRIPLE-TECT seals and SPLIT-SPHER components which are UNIFIED exclusives

FEATURES/BENEFITS PAGE B15-3	SPECIFICATION/HOW TO ORDER PAGE B15-7	NOMENCLATURE PAGE B15-8	SELECTION PAGE B15-13

SELECTION/DIMENSIONS

SAF-XT Pillow Blocks Housing

LUBE NOTE:
All Sizes Use
A 1/8-27 NPT
Hydraulic Grease
Fitting

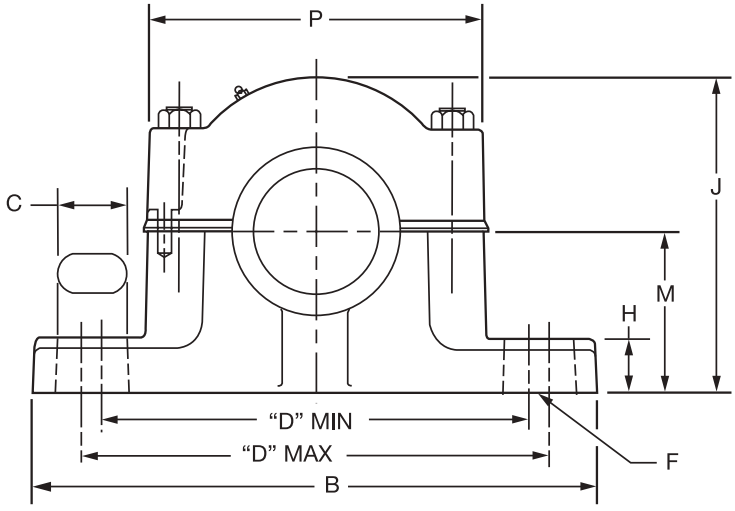

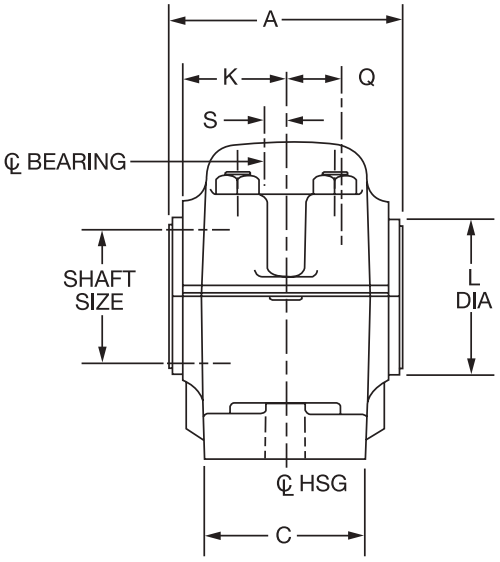



SAF-XT Pillow Blocks Housing

S-1 Size Inch (mm)	Shaft Housing	2-Bolt		4-Bolt	
		Part Number	Approx. Wt. (lbs.)	Part Number	Approx. Wt. lbs
1-15/16	511	**042100**	13.75	**-**	-
2-3/16 (55,60)	513 513M	**042103** **046323**	18.00 18.00	**-**	-
2-7/16, 2-1/2 (65)	515 515M	**042106** **046324**	22.75 22.00	**042109** **046325**	22 22
2-11/16 2-3/4	516	**042111**	30.5	**042114**	30
2-15/16 3	517	**042116**	31.5	**042119**	32
3-3/16	518	**042121**	38	**042124**	40
3-7/16 3-1/2	520	**042126**	51.5	**042129**	52
3-15/16 4	522	**-**	-	**042131**	68
4-3/16 (110)	524 524M	**-**	-	**042134** **046326**	70
4-7/16 4-1/2	526	**-**	-	**042137**	108
4-15/16 5	528	**-**	-	**042140**	143
5-3/16	530	**-**	-	**042143**	120
5-7/16 5-1/2	532	**-**	-	**042146**	168
5-15/16 6	534	**-**	-	**042149**	220
6-7/16 6-1/2	536	**-**	-	**042152**	266
6-15/16 7	538	**-**	-	**042155**	295
7-1/2	544S	**-**	-	**042167**	443
7-15/16 8	544	**-**	-	**042158**	443
8-7/16, 8-1/2 8-15/16, 9	48	**-**	-	**042161**	308
9-7/16 9-1/2	52	**-**	-	**422555**	440
9-15/16 10	56	**-**	-	**042164**	549
10-7/16 10-1/2	056L	**-**	-	**422571**	620

SELECTION/DIMENSIONS

SAF-XT & SAFS Pillow Block Seals

LENGTH THRU BORE W/SEALS

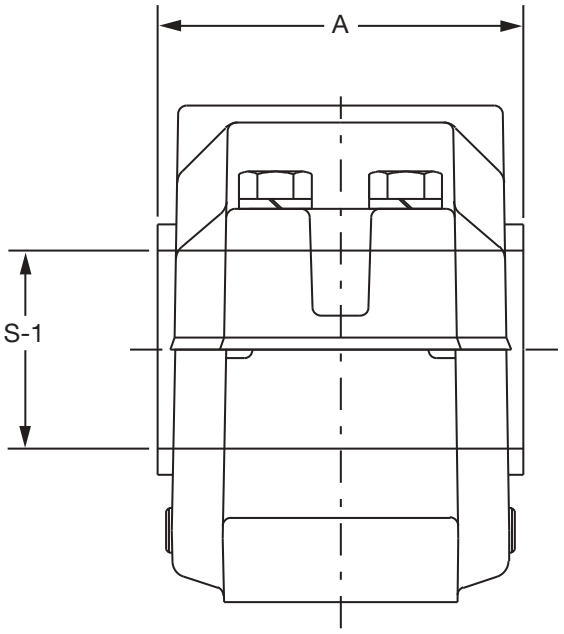

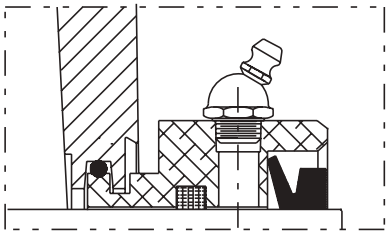

AUXILIARY TACONITE Seal
For dusty environments and low to moderate speeds

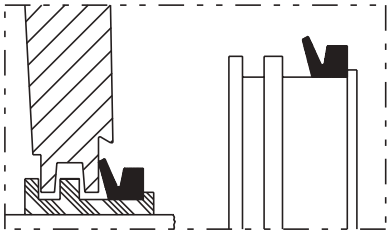

TRIPLE-TECT Seal
General purpose seal for wet or dirty environments

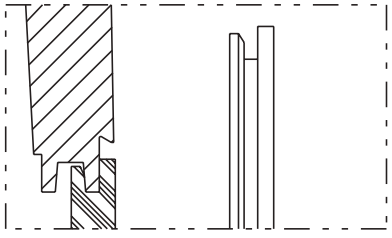

END COVER Seal
Allows use of open shaft housing as closed-end

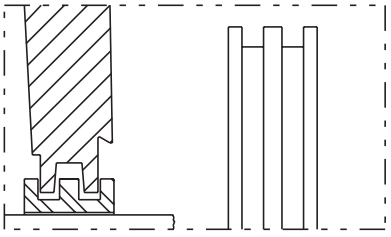

LER SEAL
High speed seal for relatively clean environments



SAF-XT & SAFS Pillow Block Seals

500 Seals - Inch						
S-1 Shaft Size (Inch)	Housing	Seal Group	Part Numbers			
			TRIPLE-TECT (TT)	# Metal Labyrinth (LER)	Auxiliary Taconite (AUX)	End Cover
1-15/16	511	12	**043540**	**042512**	**041687**	**040702**
2-3/16	513	14	**043541**	**042513**	**041688**	**040703**
2-7/16	515	20	**043542**	**042514**	**042380**	**040704**
2-1/2			**043543**	**042515**	**040890**	**040704**
2-11/16	516	24	**043544**	**042516**	**042381**	**040705**
2-3/4			**043545**	**042517**	**040891**	**040705**
2-15/16	517	28	**043546**	**042518**	**042382**	**040706**
3			**043547**	**042519**	**040918**	**040706**
3-3/16	518	34	**043548**	**042520**	**040892**	**040707**
3-7/16	520	46	**043549**	**042521**	**042383**	**040708**
3-1/2			**043550**	**042522**	**040919**	**040708**
3-15/16	522	50	**043551**	**042523**	**042384**	**040709**
4			**043552**	**042524**	**040893**	**040709**
4-3/16	524	52	**043553**	**042525**	**044360**	**040710**
4-7/16	526	54	**043554**	**042526**	**042385**	**040711**
4-1/2			**043555**	**042527**	**042386**	**040711**
4-15/16	528	56	**043556**	**042528**	**042387**	**040712**
5			**043557**	**042529**	**040894**	**040712**
5-3/16	530	58	**043558**	**042530**	**-**	**040713**
5-7/16	532	60	**043559**	**042531**	**042388**	**040714**
5-1/2			**043574**	**042532**	**040895**	**040714**
5-15/16	534	64	**043560**	**042533**	**042389**	**040681**
6			**043561**	**042534**	**041646**	**040681**
6-7/16	536	68	**043562**	**042535**	**042390**	**040682**
6-1/2			**043563**	**042536**	**042391**	**040682**
6-15/16	538	72	**043564**	**042537**	**042392**	**040683**
7			**043565**	**042538**	**043109**	**040683**
7-3/16	540	74	**046421**	**043386**	**040690**	**040691**
7-1/2	544S	76	**043567**	**042539**	**040896**	**040684**
7-15/16	544	78	**043566**	**042540**	**042393**	**040685**
8			**043568**	**042541***	**042394**	**040685**
8-7/16	048	90	**043569**	**042542***	**040897**	**042368**
8-1/2			**043570**	**042543***	**040898**	**042368**
8-15/16			**043571**	**042544***	**040899**	**042368**
9			**043572**	**042545***	**040995**	**042368**
9-7/16	052	84	**043538**	**042510***	**040900**	**422606**
9-1/2			**422594**	**042594***	**040901**	**422606**
9-15/16	056	92	**043575**	**042511***	**-**	**042369**
10			**043573**	**041082***	**042395**	**042369**
10-7/16	056L	94	**047940**	**042036***	**-**	**042397**
10-1/2			**047941**	**422573***	**042396**	**042397**

 # NOTE: LER seals are made from Aluminum unless otherwise noted by the * symbol.

If an * appears by the part number, the LER seal is manufactured from Steel.

SELECTION/DIMENSIONS

DODGE



SAF-XT & SAFS 22200K and 23000K Spherical Roller Bearings

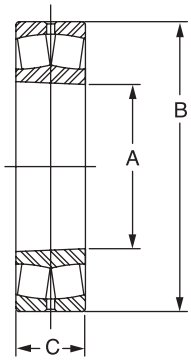

S-1 Shaft Size (Inch)	Housing	Bearing No.	Part No.	Approx. Wt. (lbs)	A Inch (mm)	B Inch (mm)	C Inch (mm)
1-15/16	511	22211K	**422123**	1.8	2.1654 (55)	3.9370 (100)	.9843 (25)
2-3/16	513	22213K	**422124**	3.2	2.5591 (65)	4.7244 (120)	1.2205 (31)
2-7/16 2-1/2	515	22215K	**422001**	3.6	2.9528 (75)	5.1181 (130)	1.2205 (31)
2-11/16 2-3/4	516	22216K	**422003**	4.4	3.1496 (80)	5.5188 (140)	1.2992 (33)
2-15/16 3	517	22217K	**422005**	5.5	3.3465 (85)	5.9055 (150)	1.4173 (36)
3-3/16	518	22218K	**422007**	7.0	3.5433 (90)	6.2992 (160)	1.5748 (40)
3-7/16 3-1/2	520	22220K	**422009**	10.4	3.9370 (100)	7.0866 (180)	1.8110 (46)
3-15/16 4	522	22222K	**422011**	14.9	4.3307 (110)	7.8740 (200)	2.0866 (53)
4-3/16	524	22224K	**422013**	18.7	4.7244 (120)	8.4646 (215)	2.2865 (58)
4-7/16 4-1/2	526	22226K	**422015**	23.4	5.1181 (130)	9.0551 (230)	2.5197 (64)
4-15/16 5	528	22228K	**422017**	29.5	5.5118 (140)	9.8425 (250)	2.6772 (68)
5-3/16	530	22230K	**422019**	37.5	5.9055 (150)	10.6299 (270)	2.8740 (73)
5-7/16 5-1/2	532	22232K	**422021**	48.1	6.2992 (160)	11.4173 (290)	3.1496 (80)
5-15/16 6	534	22234K	**422023**	58.0	6.6929 (170)	12.2047 (310)	3.3858 (86)
6-7/16 6-1/2	536	22236K	**422025**	60.8	7.0866 (180)	12.5984 (320)	3.3858 (86)
6-15/16 7	538	22238K	**422027**	78.9	7.4803 (190)	13.3858 (340)	3.6220 (92)
7-3/16	540	22240K	**422064**	94.1	7.8740 (200)	14.1732 (360)	3.8583 (98)
7-1/2	544S	22244K	**422029**	129.0	8.6614 (220)	14.7480 (400)	4.2520 (108)
7-15/16 8	544						
8-7/16 8-1/2 8-15/16 9	048	23048K	**422031**	73.4	9.4488 (240)	14.1732 (360)	3.6220 (92)
9-7/16 9-1/2	052	23052K	**422543**	106.0	10.2362 (260)	15.7480 (400)	4.0945 (104)
9-15/16 10	056	23056K	**422030**	114.0	11.0236 (280)	16.5354 (430)	4.1732 (106)
10-7/16 10-1/2	056L						

FEATURES/BENEFITS PAGE B15-3 | SPECIFICATION/HOW TO ORDER PAGE B15-7 | NOMENCLATURE PAGE B15-8 | SELECTION PAGE B15-13



SAF-XT & SAFS Adaptor Assembly (SNW)

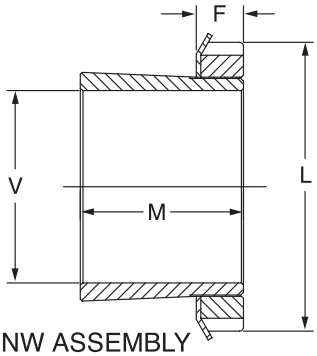

SNW ASSEMBLY

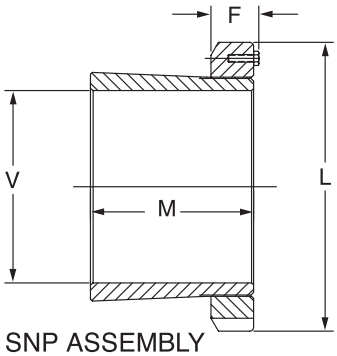

SNP ASSEMBLY

V Shaft Dia. (In)	Housing	SNW/SNP Number	Part Number	Approx Wt. (Lbs)	L (in.)	F Max (in.)	M (in.)
1-15/16	511	H311-SNW-115	**046352**	0.8	2.97	0.58	1.85
2-3/16	513	H313-SNW-203	**046353**	1.6	3.38	0.64	2.10
2-7/16	515	H315-SNW-207	**046354**	2.6	3.88	0.69	2.29
2-1/2		H315-SMW-208	**046355**	2.3			
2-11/16	516	H316-SNW-211	**046356**	2.6	4.16	0.69	2.37
2-3/4		H316-SNW-212	**046357**	2.6			
2-15/16	517	H317-SNW-215	**046358**	3.0	4.41	0.72	2.47
3		H317-SNW-300	**046359**	2.5			
3-3/16	518	H318-SNW-303	**046360**	3.1	4.66	0.80	2.63
3-7/16	520	H320-SNW-307	**046361**	4.6	5.19	0.83	2.87
3-1/2		H320-SNW-308	**046362**	4.4			
3-15/16	522	H322-SNW-315	**046363**	5.6	5.72	0.86	3.19
4		H322-SNW-400	**046364**	5.0			
4-3/16	524	H3124-SNW-403	**046430**	6.5	6.12	0.92	3.47
4-7/16	526	H3126-SNW-407	**046431**	9.2	6.75	0.95	3.76
4-1/2		H3126-SNW-408	**046432**	8.6			
4-15/16	528	H3128-SNW-415	**046433**	10.0	7.09	1.02	3.97
5		H3128-SNW-500	**046434**	9.0			
5-3/16	530	SNW30-503	**043618**	12.7	7.69	1.08	4.22
5-7/16	532	SNW32-507	**043619**	15.9	8.06	1.14	4.57
5-1/2		SNW32-508	**043634**	15.0			
5-15/16	534	SNW34-515	**043620**	17.6	8.66	1.23	4.83
6		SNW34-600	**043621**	17.0			
6-7/16	536	SNW36-607	**043622**	17.0	9.06	1.27	5.02
6-1/2		SNW36-608	**043623**	18.0			
6-15/16	538	SNW38-615	**043624**	18.0	9.47	1.30	5.26
7		SNW38-700	**043625**	17.0			
7-3/16	540	SNW40-703	**046545**	30.7	9.84	1.36	5.48
7-1/2	544S	SNW44-708	**043627**	30.2	11.00	1.42	5.90
7-15/16	544	SNW44-715	**043626**	36.0			
8		SNW44-800	**043628**	34.7			
8-7/16	048	SNP048-807	**043629**	38.0	11.44	1.73	5.44
8-1/2		SNP048-808	**043630**	30.0			
8-15/16		SNP048-815	**043631**	28.0			
9		SNP048-900	**043632**	22.0			
9-7/16	052	SNP052-907	**043585**	41.1	12.19	1.80	6.02
9-1/2		SNP052-908	**422538**	40.0			
9-15/16	056	SNP056-915	**043586**	43.7	13.00	1.89	6.19
10		SNP056-1000	**043633**	42.0			
10-7/16	056L	SNP056-1007	**043580**	30.0			
10-1/2		SNP056-1008	**422567**	28.0			

FEATURES/BENEFITS PAGE B15-3	SPECIFICATION/HOW TO ORDER PAGE B15-7	NOMENCLATURE PAGE B15-8	SELECTION PAGE B15-13

SELECTION/DIMENSIONS



Pillow Block SPLIT-SPHER™ Roller Bearings
(USAF 500 SERIES)

DODGE SPLIT-SPHER Roller Bearings have the capacity to carry heavy radial loads and combined radial and thrust loads. The maximum recommended load which can be applied is limited by various components in the system such as bearing, housing, shaft, shaft attachment, speed and life requirements as listed in this catalog. DODGE spherical roller bearings have been applied successfully even when these limits have been exceeded under controlled operating conditions. Contact DODGE Application Engineering (864-284-5700) for applications which exceed the recommendations of this catalog.

L_{10} Hours Life - The life which may be expected from at least 90% of a given group of bearings operating under identical conditions.

$$L_{10}\text{ Life, Hours} = \left(\frac{C}{P}\right)^{10/3} \text{ X } \left(\frac{16667}{RPM}\right)$$

Where:

C = Dynamic Capacity (Table 11 on page B15-70), lbs.
P = Equivalent Radial Load, lbs.

(See Equation 1 on page B15-74 for definition of P.)

GENERAL

Heavy Service - For heavy shock loads, frequent shock loads, or severe vibrations, increase the Equivalent Radial Load up to 50% (according to severity of conditions) to obtain a Modified Equivalent Radial Load. Consult DODGE Application Engineering for additional selection assistance.

Thrust load values shown in the table below are recommended as a guide for general applications that will give adequate L_{10} life. Where substantial radial load is also present, it is advisable to calculate actual L_{10} life to assure that the bearing meets the requirements.

RPM	20-200	201 - 2000	Over2000
RECOMMENDED THRUST LOAD	C/20	C/40	C/60

The shaft tolerances recommended below are adequate for normal radial and radial/thrust load applications. Since the allowable load, especially at a low speed, is very large, the shaft should be checked to assure adequate shaft strength.

The magnitude and direction of both the thrust and radial load must be taken into account when selecting a housing. **When pillow blocks are utilized, heavy loads should be directed through the base. Where uplift loads are involved, see B15-21 for maximum values.** Spherical bearings require a radial load at least equal to the thrust load for proper operation. It is advisable to calculate actual L_{10} life to assure adequate conditions (normally at least 30,000 hours life). Where a load pulls the housing away from the mounting base, both the hold-down bolts and housing must be of adequate strength. Auxiliary load carrying devices such as shear bars are advisable for side or end loading of pillow blocks.

SHAFT TOLERANCES

Shaft Sizes, Inches	Tolerance, Inches
Up to 1-1/2”	+.000 - .002”
1-9/16 to 2-1/2”	+.000 - .003”
2-5/8 to 4”	+.000 - .004”
4-7/16 to 6”	+.000 - .005”

* Use the smaller of this value or the maximum allowable thrust load listed in Table 10.

NOTE: Polyamide cages may limit bearing operating temperature.



Selecting Bearings - Supporting Radial Loads Only

1. Define the desired L_{10} Life in Hours.
2. Establish bearing radial load, F_R.
3. Establish RPM.
4. Calculate the equivalent radial load.
   ($P = F_R \times 1.1\# =$ Equivalent radial load)
   (The DODGE program BEST ✦ can be used to find application loads.)

Using the easy selection Table 12 on page B15-75, under the RPM column find the equivalent load that equals or is slightly higher than the application radial load multiplied by a 1.1 factor for the desired life. The shaft size on the far left will be the minimum shaft size that you can use for your application. If the desired life is different than the values shown on the chart, use alternate Method A shown below.

Example:
1. L_{10} Life = 30,000 Hours
2. Radial load = 4,000 lbs.
3. RPM = 950

At the intersection of the 950 RPM column and the 30,000 hours L_{10} life row, the equivalent radial load of 4445 lbs. exceeds the 4400 lbs. (4000 x 1.1) application equivalent radial load for shaft size 2-7/16" - 2-1/2". A SPLIT-SPHER bearing with shaft size of 2-7/16" - 2-1/2" may be used for this application.

- The application factor, 1.1, compensates for the gaps and relief area on either side of the gaps. At no time should F_R or P exceed 20% of the Dynamic Capacity C.

✦ The DODGE Bearing Evaluation and Selection Technique (BEST) is a menu driven computer program that calculates bearing loads, fatigue life and operating temperature for a two bearing shaft system based on user supplied input parameters. This interactive program is available at **www.ptwizard.com** under the Product Section area.

ALTERNATE METHOD A - SELECTING A BEARING FOR AN L_{10} LIFE VALUE NOT SHOWN IN THE EASY SELECTION CHART.

The L_{10} life equation can be rearranged so that the bearing dynamic capacity C is identified in terms of L_{10}, RPM and P.

$$C = \left(\frac{L_{10} \times RPM}{16667}\right)^{0.3} \times P$$

($P = F_R \times 1.1\bullet =$ Equivalent Radial Load)

Since the L_{10}, RPM, and F_R are known, solve for C. Select from the dynamic capacity column on Table 11 on page B15-74 the C value equal to or just greater than the C value just calculated. The bore size on the far left represents the minimum shaft size selection. Check that the application RPM does not exceed the MAX. RPM on Table 10. When selecting an L_{10} life of less than 30,000 hours, particular attention must be given to shaft deflection and proper lubricant selection.

SELECTION/DIMENSIONS



Selecting Bearings Supporting Combination Radial And Thrust Loads

When a bearing supports both a radial load and a thrust load, the loading on the two rows is shared unequally depending on the ratio of thrust to radial load. The use of the X (radial factor) and Y (thrust factor) from Table 11 on page B15-74 converts the applied thrust load and radial loads to an equivalent radial load having the same effect on the life of the bearing as a radial load of this magnitude.

Equation 1

The equivalent radial load P = (XFR + YFA) x 1.1•

Where:

P = Equivalent radial load, lbs

F_R = Radial load, lbs

F_A = Thrust (axial) load, lbs (** See Note below)

e = Thrust load or radial load factor (Table 11)

X = Radial load factor (Table 11)

Y = Thrust load factor (Table 11)

To find X and Y, calculate F_A/F_R and compare to e for the selected bore size. Determine X and Y from Table 10 depending on whether F_A/F_R is equal to or less than e, or F_A/F_R is greater than e. Substitute all known values into the equivalent radial load equation. P (equivalent radial load) can be used in the life formula to determine L_{10}, or it can be compared to the allowable equivalent radial load ratings for the speed and hours life desired in the easy selection chart.

SELECTING BEARINGS SUPPORTING ONLY THRUST LOADS

Spherical Roller Bearings generally are not recommended for pure thrust load applications. They will perform satisfactorily under very light pure thrust loads. Consult DODGE Application Engineering (864-284-5700).

AXIAL EXPANSION CAPABILITY

The axial expansion capability of SPLIT-SPHER Pillow Blocks is the same as the UNIFIED 500 pillow blocks. See Table 7 on page B15-25.

- The application factor, 1.1, compensates for the gaps and relief area on either side of the gaps. At no time should FR or P exceed 20% of the Dynamic Capacity C

Table 11: SPLIT-SPHER Bearings Radial & Thrust Factor

Shaft Size Inches	Replaces Bearing Series	e	$F_A/F_R \le e$		$F_A/F_R > e$		Max. Allow. Thrust Load F_A Lbs.	Dynamic* Capacity (C) Pounds	Max. RPM (Grease)
			X	Y	X	Y			
2-3/16	22213K	0.24	1	2.80	0.67	4.20	1200	35,000	2600
2-7/16	22215K	0.24	1	2.80	0.67	4.20	1200	41,500	2350
2-15/16 - 3	22217K	0.22	1	3.10	0.67	4.60	1700	45,000	2200
3-3/16	22218K	0.22	1	2.90	0.67	4.60	1700	52,000	2100
3-7/16	22220K	0.23	1	2.80	0.67	4.30	1700	71,000	1700
3-15/16 - 4	22222K	0.24	1	2.80	0.67	4.20	3100	90,000	1450
4-7/16	22226K	0.25	1	2.70	0.67	4.00	3100	132,000	1200
4-15/16	22228K	0.26	1	2.60	0.67	3.90	3100	153,000	1100
5-7/16	22232K	0.25	1	2.70	0.67	4.00	5000	204,000	1000
5-15/16 - 6	22234K	0.26	1	2.60	0.67	3.90	5000	232,000	950

* At no time load on a SPLIT-SPHER bearing should exceed 20% of the Dynamic Capacity C.



Table 12: Selection Table For SPLIT-SPHER Spherical Roller Bearings

Shaft Size Inches	L_{10} Life Hrs.	Allowable Equivalent Radial Load Rating (Lbs.) At Various Revolutions Per Minute													
		50	100	250	375	450	800	950	1100	1200	1300	1700	2100	2350	2600
2-3/16	10000	7000	7000	7000	6990	6620	5570	5290	5060	4930	4815	4440	4170	4030	3910
	30000	**7000**	**7000**	**5680**	**5030**	**4760**	**4005**	**3805**	**3640**	**3545**	**3465**	**3195**	**3000**	**2900**	**2810**
	50000	7000	6415	4870	4315	4085	3435	3265	3125	3045	2970	2740	2570	2485	2415
	100000	6415	5210	3955	3505	3315	2790	2650	2535	2470	2415	2225	2090	2020	1960
2-7/16	10000	8300	8300	8300	8175	7740	6510	6185	5920	5765	5630	5195	4875	4710	
	30000	**8300**	**8300**	**6640**	**5880**	**5565**	**4685**	**4445**	**4255**	**4145**	**4050**	**3735**	**3505**	**3390**	
	50000	8300	7495	5695	5045	4775	4015	3815	3650	3555	3475	3205	3005	2905	
	100000	7495	6090	4625	4095	3880	3265	3100	2965	2890	2820	2600	2445	2360	
2-15/16 3	10000	9000	9000	9000	8860	8390	7060	705	6415	6250	6105	5630	5285		
	30000	**9000**	**9000**	**7200**	**6375**	**6035**	**5080**	**4820**	**4615**	**4495**	**4390**	**4050**	**3800**		
	50000	9000	8130	6175	5470	5175	4355	4135	3960	3855	3765	3475	3260		
	100000	8130	6605	5015	4440	4205	3540	3360	3215	3135	3060	2820	2650		
3-3/16	10000	10400	10400	10400	10240	9695	8160	7750	7415	7225	7055	6505	6105		
	30000	**10400**	**10400**	**8320**	**7365**	**6975**	**5870**	**5575**	**5335**	**5195**	**5070**	**4680**	**4390**		
	50000	10400	9395	7135	6320	5980	5035	4780	4575	4455	4350	4015	3770		
	100000	9395	7630	5795	5130	4860	4090	3885	3715	3620	3535	3260	3060		
3-7/16	10000	14200	14200	14200	13985	13240	11140	10580	10125	9865	9630	8885			
	30000	**14200**	**14200**	**11355**	**10055**	**9520**	**8010**	**7610**	**7280**	**7095**	**6925**	**6390**			
	50000	14200	12825	9745	8630	8170	6875	6530	6245	6085	5940	5480			
	100000	12825	10420	7915	7010	6635	5585	5300	5075	4945	4825	4455			
3-15/16 4	10000	18000	18000	18000	17725	16780	14120	13410	12835	12505	12205				
	30000	**18000**	**18000**	**14395**	**12750**	**12070**	**10155**	**9645**	**9230**	**8995**	**8780**				
	50000	18000	16260	12350	10935	10355	8715	8275	7920	7715	7530				
	100000	16260	13205	10030	8885	8410	7075	6720	6430	6265	6120				
4-7/16	10000	26400	26400	26400	25995	24615	20710	19670	18825	18340					
	30000	**26400**	**26400**	**21115**	**18695**	**17700**	**14895**	**14145**	**13540**	**13190**					
	50000	26400	23845	18115	16040	15185	12780	12135	11615	11315					
	100000	23845	19370	14715	13030	12335	10380	9860	9435	9190					
4-15/16	10000	30600	30600	30600	30130	28530	24005	22800	21820						
	30000	**30600**	**30600**	**24475**	**21670**	**20520**	**17265**	**16400**	**15690**						
	50000	30600	27640	20995	18590	17605	14810	14070	13460						
	100000	27640	22450	17055	15100	14300	12030	11425	10935						
5-7/16	10000	40800	40800	40800	40175	38040	32010	30400							
	30000	**40800**	**40800**	**32635**	**28895**	**27360**	**23020**	**21865**							
	50000	40800	36855	27995	24790	23470	19750	18755							
	100000	36855	29935	22740	20135	19065	16040	15235							
5-15/16 6	10000	46400	46400	46400	45690	43260	36400	34570							
	30000	**46400**	**46400**	**37115**	**32860**	**31115**	**26180**	**24865**							
	50000	46400	41915	31840	28195	26690	22460	21330							
	100000	41915	34045	25860	22900	21680	18245	17325							

SELECTION/DIMENSIONS



Selecting Lubrication

DODGE SPLIT-SPHER Roller Bearings are lubricated by the user at installation. DODGE SPLIT-SPHER Roller Bearings can be run with either grease or oil lubrication.

Grease Lubrication:

In order to properly protect the bearing during installation, pack the bearing insert 100% full of grease immediately after properly mounting the bearing on the shaft. If the RPM of the application falls between 20% and 80% of maximum RPM (Table 11 on page B15-74), pack the lower half of the housing one-third to one-half full. If the RPM of the application is less than 20% of maximum RPM, pack bearing housing cavity 100% full. If the RPM exceeds 80% of maximum RPM, do not add grease in the lower half of the housing nor in the cap.

At each re-greasing cycle, for applications up to 80% of maximum RPM, slowly add grease until fresh grease is seen purging at the seals. Re-greasing should be done while running. Remote re-greasing lines should be added to avoid endangering personnel. If the RPM is greater than 80% of maximum RPM, add 4 strokes of a handgun at each re-greasing cycle for bores up to 2". For bores greater than 2", up to 5", add 8" strokes of a handgun at each re-greasing cycle. For bores greater than 5", up to 6", add 16 strokes of a handgun at each re-greasing cycle. For units running above 80% of maximum RPM, running temperature should be monitored. If a drastic change in running temperature is noted, DODGE recommends removing the used grease completely and recharging with fresh grease per the above instructions. For warning before catastrophic failure, see DODGE Temperature Monitor Package on page B15-54.

Select a grease with a viscosity at an operating temperature which will provide full film lubrication (see Table 12). Use a 50°F to 100°F increase in bearing temperature above ambient, depending on RPM and load. Use Table 13 on page B15-76 as a general guide for re-greasing the bearings. A small amount of grease at frequent intervals is preferable to a large amount of grease at infrequent intervals. For special applications involving high speeds, high loads, or very low speeds, consult DODGE Application Engineering (864-284-5700).

Table 13: Viscosity Of Oil In Grease

DN Δ	Viscosity for Loads Up To 18% of Dyn. Cap. ✦ (SUS @ Oper. Temp.)	DN Δ	Viscosity for Loads Up To 18% of Dyn. Cap. ✦ (SUS. @ Oper. Temp.)
100	3500	1400	625
200	3150	1600	525
300	2750	1800	450
400	2375	2000	400
500	2000	3000	300
600	1750	4000	200
700	1500	5000	150
800	1300	6000	130
900	1075	7000	110
1000	900	8000	100

Δ DN = Bore Diameter (inches) x RPM

✦ For loads above 18% of dynamic capacity, an EP grease with the viscosity selected from above is recommended.

Table 14: Re-Greasing Intervals (Months*) (Based on 12 Hours per Day, 150-F Max.)

Shaft Size (inch)	RPM							
	250	500	750	100	1250	1500	2000	2500
1-7/16 - 1-15/16	8	6	4	3	2	1	.50	.50
2-3/16	7	5	3	2	1	1	.50	.25
2-7/16 - 3	6	4	3	2	1	.50	.25	.25
3-3/16 - 3-1/2	5	3	2	1	.50	.50	.25	
3-15/16 - 4-7/16	4	3	2	1	.50	.25		
4-15/16 - 5-1/2	3	2	1	.50	.25			
5-15/16 - 6	2	1	1	.50				

* For continuous operation, 24 hrs./day, reduce the re-greasing intervals by half.



USAF 500 SPLIT-SPHER Pillow Block

Shaft Dia S-1	Complete Pillow Block Part No.	Housing W/ Stab Ring Part No.	Bearing Part No.	Dynamic Capacity (C), lbs.	Max RPM (Grease)	Split LER Seal
2-3/16	P2B13-SS-203 043958	H2S-513-USAF 043998	BRG13SS203 043393	32,500	2,600	14SS203 043501
	P4B13-SS-203 046110	H4S-513-USAF 039669	BRG13SS203 043393	32,500	2,600	14SS203 043501
2-7/16	P2B15-SS-207 043959	H2S-515-USAF 044000	BRG15SS207 043400	39,000	2,350	20SS207 043502
	P4B15-SS-207 043964	H4S-515-USAF 044003	BRG15SS207 043400	39,000	2,350	20SS207 043502
2-11/16	P2B16-SS-211 043960	H2S-516-USAF 044198	BRG16SS211 043401	40,500	2,300	24SS211 043504
	P4B16-SS-211 043965	H4S-516-USAF 044007	BRG16SS211 043401	40,500	2,300	24SS211 043504
2-15/16	P2B17-SS-215 043961	H2S-517-USAF 044010	BRG17SS215 043402	41,500	2,200	28SS215 043506
	P4B17-SS-215 043966	H4S-517-USAF 044013	BRG17SS215 043402	41,500	2,200	28SS215 043506
3-3/16	P2B18-SS-303 043962	H2S-518-USAF 044199	BRG18SS303 043403	47,500	2,000	34SS303 043508
	P4B18-SS-303 043967	H4S-518-USAF 044114	BRG18SS303 043403	47,500	2,000	34SS303 043508
3-7/16	P2B20-SS-307 043963	H2S-520-USAF 044020	BRG20SS307 043404	64,000	1,700	46SS307 043509
	P4B20-SS-307 043968	H4S-520-USAF 044023	BRG20SS307 043404	64,000	1,700	46SS307 043509
3-15/16	P4B22-SS-315 043969	H4S-522-USAF 044025	BRG22SS315 043405	80,000	1,450	50SS315 043511
4	P4B22-SS-400 043970	H4S-522-USAF 044025	BRG22SS400 043406	80,000	1,450	50SS400 043512
4 3/16	P4B24-SS-403 043971	H4S-524-USAF 044202	BRG24SS403 043421	102,000	1,300	52SS403 043513
4-7/16	P4B26-SS-407 043972	H4S-526-USAF 044031	BRG26SS407 043407	120,000	1,200	54SS407 043514
4-15/16	P4B28-SS-415 043974	H4S-528-USAF 044034	BRG28SS415 043408	143,000	1,100	56SS415 043516
5-7/16	P4B32-SS-507 043976	H4S-532-USAF 044040	BRG32SS507 043410	190,000	950	60SS507 043519
5-15/16	P4B34-SS-515 043977	H4S-534-USAF 044043	BRG34SS515 043411	216,000	900	64SS515 043520
6	P4B34-SS-600 043978	H4S-534-USAF 044043	BRG34SS600 043412	216,000	900	64SS600 043521

NOTE: Ratings Per FAG Catalog

FEATURES/BENEFITS PAGE B15-3	SPECIFICATION/HOW TO ORDER PAGE B15-7	NOMENCLATURE PAGE B15-8	SELECTION PAGE B15-13

SELECTION/DIMENSIONS

USAF 500 SPLIT-SPHER Housing Dimensions

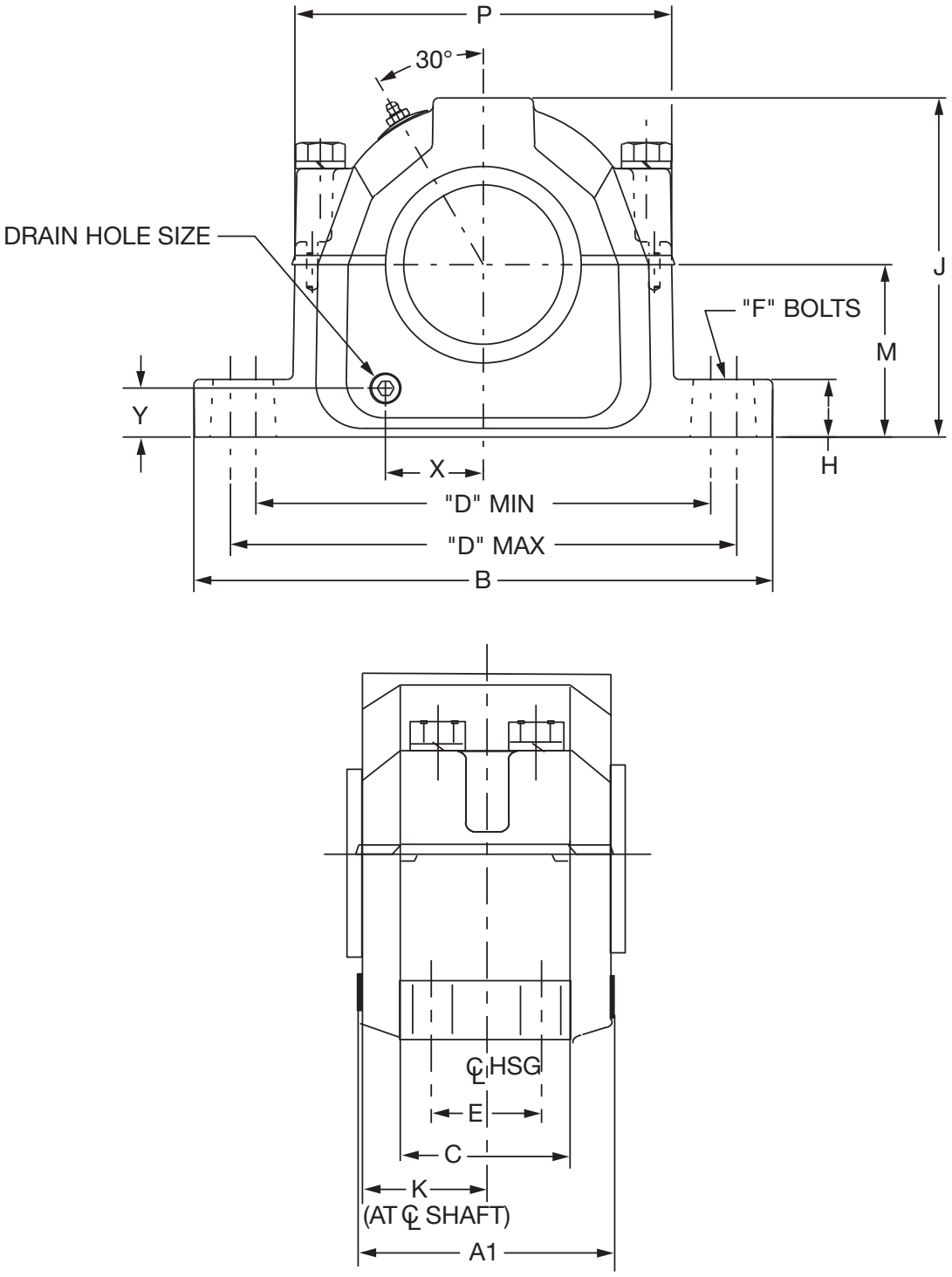



USAF 500 SPLIT-SPHER Housing Dimensions

S-1 Shaft Size	Housing	▲ A1	B	C	D				E
					2-Bolt		4-Bolt		
2-3/16	513	4.64	11.00	3.13	8.13	9.50	8.13	9.50	1.88
2-7/16	515	5.20	11.13	3.13	8.63	9.63	8.63	9.63	1.88
2-11/16	516	5.44	12.59	3.50	9.63	11.00	9.63	11.00	2.13
2-15/16	517	5.39	12.59	3.50	9.88	11.00	9.88	11.00	2.13
3-3/16	518	6.16	13.63	3.88	10.25	11.75	10.38	11.63	2.13
3-7/16	520	6.78	15.36	4.34	11.63	13.13	11.63	13.13	2.38
3-15/16 4	522	7.08	16.50	4.75	-	-	12.59	14.50	2.75
4-7/16	526	8.27	18.38	5.13	-	-	14.50	16.00	3.25
4-15/16	528	8.77	19.69	5.88	-	-	15.63	17.38	3.38
5-7/16	532	9.92	21.66	6.75	-	-	17.38	19.25	3.75
5-15/16 6	534	9.72	24.75	6.75	-	-	19.38	21.63	4.25

S-1 Shaft Size	Housing	F		H	J	K	M	P
		2-Bolt	4-Bolt					
2-3/16	513	5/8	1/2	1.03	5.94	2.16	3.00	6.50
2-7/16	515	5/8	1/2	1.25	6.44	2.31	3.25	7.06
2-11/16	516	3/4	5/8	1.06	6.75	2.42	3.50	7.94
2-15/16	517	3/4	5/8	1.25	7.38	2.47	3.75	8.19
3-3/16	518	3/4	5/8	1.44	7.75	2.84	4.00	8.66
3-7/16	520	7/8	3/4	1.66	8.75	3.16	4.50	9.78
3-15/16 4	522	-	3/4	1.78	9.41	3.30	4.94	10.59
4-7/16	526	-	7/8	2.06	11.53	3.75	6.00	12.41
4-15/16	528	-	1	2.06	11.81	4.00	6.00	13.25
5-7/16	532	-	1	2.34	13.31	4.63	6.69	14.91
5-15/16 6	534	-	1	2.88	14.56	4.63	7.06	16.81

▲ Housing width with drain plugs

✦ Distance shaft should extend beyond housing centerline if pillow block is closed end style

● Non-expansion bearing offset from centerline.

Dowel hole locations for Precision Positioning, see Page B15-126 - B15-127

SELECTION/DIMENSIONS

USAF 500 SPLIT-SPHER Pillow Block Seals

LENGTH THRU BORE W/SEALS

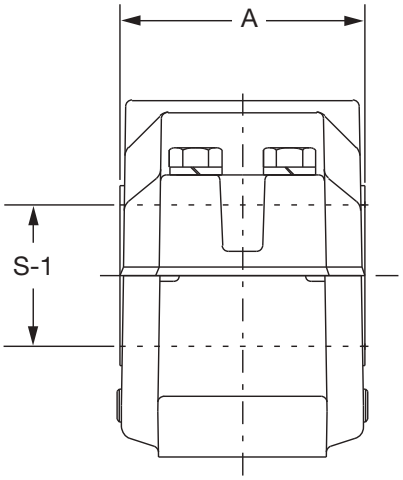

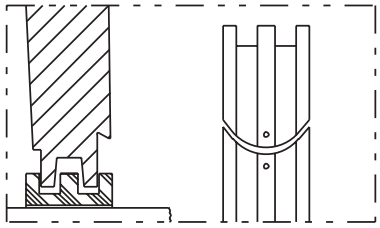

SPLIT Seal
Permits easy installation in hard-to-reach applications without removing shaft. Non-metallic split LER.

S-1 Shaft Size Inch	Housing	Seal Group	Seal Part Number	A
2-3/16	513	14	**043501**	4.72
2-7/16	515	20	**043502**	4.47
2-11/16	516	24	**043504**	4.72
2-15/16	517	28	**043506**	4.83
3-3/16	518	34	**043508**	5.70
3-7/16	520	46	**043509**	6.19
3-15/16 4	522	50	**043511** **043512**	6.59
4-3/16	524	52	**043513**	7.31
4-7/16	526	54	**043514**	7.50
4-15/16	528	56	**043516**	7.88
5-7/16	532	60	**043519**	9.20
5-15/16 6	534	64	**043520** **043521**	9.13
6-7/16	536	68	**043522**	9.69

DODGE



USAF 22200 SPLIT-SPHER Roller Bearings

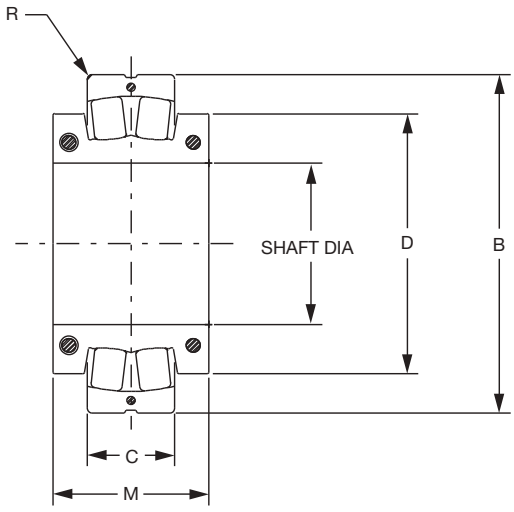

Shaft Dia. Inch	Housing	Bearing Descriptive No.	Bearing Part No.	Approx. Weight (Lbs)	B Inch (mm)	C Inch (mm)	M Inch (mm)	D Inch	R Inch
2-3/16	513	22213SS203	**043393**	5.07	4.7244 (120)	1.2205 (31)	2.1654 (55)	3.3464	0.06
2-7/16	515	22215SS207	**043400**	5.73	5.1181 (130)	1.2205 (31)	2.3622 (60)	3.4646	0.06
2-11/16	516	22216SS211	**043401**	7.12	5.5118 (140)	1.2992 (33)	2.4409 (62)	3.701	0.08
2-15/16	517	22217SS215	**043402**	9.04	5.9055 (150)	1.4173 (36)	2.6772 (68)	4.0157	0.08
3-3/16	518	22218SS303	**043403**	10.1	6.2992 (160)	1.5748 (40)	2.7559 (70)	4.4094	0.08
3-7/16	520	22220SS307	**043404**	14.2	7.0866 (180)	1.811 (46)	2.9921 (76)	4.6457	0.08
3-15/16	522	22222SS315	**043405**	22.0	7.874 (200)	2.0866 (53)	3.622 (92)	5.4331	0.08
4		22222SS400	**043406**	22.0					
4-7/16	526	22226SS407	**043407**	32.2	9.0551 (230)	2.5197 (64)	4.0945 (104)	5.9842	0.12
4-15/16	528	22228SS415	**043408**	43.2	9.8425 (250)	2.6772 (68)	4.3307 (110)	6.6929	0.12
5-7/16	532	22232SS507	**043410**	69.4	11.4173 (290)	3.1496 (80)	4.8819 (124)	7.4016	0.12
5-15/16	534	22234SS515	**043411**	82.2	12.2047 (310)	3.3858 (86)	5.0394 (128)	7.9527	0.12
6		22234SS600	**043412**	82.2					

FEATURES/BENEFITS PAGE B15-3	SPECIFICATION/HOW TO ORDER PAGE B15-7	NOMENCLATURE PAGE B15-8	SELECTION PAGE B15-13

SELECTION/DIMENSIONS



USDAF Pillow Block - Spherical Roller Bearings

Table 15: Radial & Thrust Factors For USDAF Spherical Bearings

Shaft Size (in.)	Bearing Series	e	$F_A/F_R \le e$		$F_A/F_R > e$		Adapter Maximum Allowable Thrust Load, lbs.*	Dynamic Capacity (C), lbs.	Max. RPM	
			X	Y	X	Y			Grease	Oil
23000K SERIES										
10-15/16,11	23060K	0.25	1	2.70	0.67	4	23,875	440,000	630	800
11-7/16,11-1/2,11-15/16,12	23064K	0.25	1	2.70	0.67	4.10	26,114	455,000	600	750
12-7/16,12-1/2	23068K	0.25	1	2.70	0.67	4	30,498	530,000	560	700
12-15/16,13,13-7/16,13-1/2	23072K	0.25	1	2.70	0.67	4.10	32,535	550,000	530	670
13-15/16,14	23076K	0.24	1	2.80	0.67	4.20	34,598	570,000	500	630
15	23080K	0.24	1	2.80	0.67	4.10	39,926	680,000	450	560
15-3/4	23084K	0.24	1	2.80	0.67	4.20	42,489	710,000	450	560
23100K SERIES										
9-7/16, 9-1/2	23152K	0.33	1	2	0.67	3	19,985	490,000	670	850
10-7/16,10-1/2	23156K	0.32	1	2.10	0.67	3.20	27,571	530,000	630	800
10-15/16,11	23160K	0.33	1	2.10	0.67	3.10	32,373	600,000	600	750
11-15/16,12	23164K	0.34	1	2	0.67	2.90	37,984	720,000	530	670
12-7/16,12-1/2	23168K	0.34	1	2	0.67	2.90	43,568	830,000	500	630
13-7/16,13-1/2	23172K	0.33	1	2.10	0.67	3.10	45,617	850,000	480	600
13-15/16,14	23176K	0.32	1	2.10	0.67	3.20	49,719	915,000	450	560
23200K SERIES										
8-15/16,9	23248K	0.37	1	1.80	0.67	2.70	25,891	560,000	700	900
9-7/16,9-1/2	23252K	0.37	1	1.80	0.67	2.70	30,511	655,000	630	800
10-7/16,10-1/2	23256K	0.36	1	1.90	0.67	2.80	33,236	680,000	600	750
10-7/16,11	23260K	0.37	1	1.80	0.67	2.70	38,847	780,000	560	700
11-15/16,12	23264K	0.37	1	1.80	0.67	2.70	44,890	865,000	530	670
12-7/16,12-1/2	23268K	0.38	1	1.80	0.67	2.70	51,365	1,000,000	480	600

If the thrust load exceeds adapter maximum allowable thrust load, auxiliary methods of carrying thrust are required.



USDAF Pillow Block - Spherical Roller Bearings

Table 16: Selection Table For USDAF Spherical Bearings

Shaft Size	Bearing Series	L_{10} Life Hours	Allowable Equivalent Radial Load Rating (Lbs.) at Various Rpm. *												
			50	100	150	200	250	300	400	500	550	600	650	700	750
23000K SERIES															
10-15/16, 11	23060K	50,000	97865	79491	70387	64567	60386	57172	52445	49049	47666	46438	45336	44339	43431
		80,000	84995	69037	61130	56076	52445	49653	45548	42598	41397	40331	39374	38508	37719
		100,000	79491	64567	57172	52445	49049	46438	42598	39840	38717	37719	36824	36015	35277
11-7/16,11-1/2 11-15/16,12	23064K	50,000	101201	82201	72786	66768	62445	59121	54233	50721	49291	48021	46882	45851	44912
		80,000	87892	71391	63214	57987	54233	51346	47100	44050	42809	41706	40716	39821	39005
		100.000	82201	66768	59121	54233	50721	46021	44050	41198	40037	39005	38080	37243	36480
12-7/16,12-1/2	23068K	50,000	117883	95751	84784	77774	72738	68866	63172	59081	57416	55937	54609	53409	
		80,000	102380	83158	73634	67546	63172	59809	54864	51312	49665	48580	47428	46385	
		100,000	95751	77774	68866	63172	59081	55937	51312	47989	46636	45435	44357	43381	
12-15/16,13 13-7/16,13-1/2	23072K	50,000	122331	99364	87984	80709	75483	71465	65556	61311	59583	58048	56670		
		80,000	106243	86296	76413	70094	65556	62066	56934	53248	51747	50414	49217		
		100,000	99363	80709	71465	65556	61311	56048	53248	49800	48396	47149	46031		
13-15/16, 14	23076K	50,000	126780	102977	91183	83643	78227	74064	67940	63540	61749	60158			
		80,000	110107	89435	79191	72643	67940	64323	59005	55184	53629	52247			
		100,000	102977	83643	74064	67940	63540	60158	55184	51611	50156	48864			
15	23080K	50,000	151246	122850	108780	99785	93324	88357	81051	75803	73666				
		80,000	131355	106694	94474	86662	81051	76737	70392	65834	63978				
		100,000	122850	99785	88357	81051	75803	71768	65834	61571	59835				
15-3/4	23084K	50,000	157919	128270	113579	104187	97441	92255	84627	79147	76916				
		80,00	137151	111401	98642	90486	84627	80122	73497	66736	66601				
		100,000	128270	104187	92255	84627	79147	74934	68738	64287	62475				
23100K SERIES															
9-7/16, 9-1/2	23152K	50,000	108992	88529	78390	71908	67252	63672	58407	54625	53086	51718	50491	49381	48369
		80,000	94658	76886	68080	62451	58407	55299	50726	47442	46104	44916	43851	42886	42008
		100,000	88529	71908	63672	58407	54625	51718	47442	44370	43119	42008	41011	40110	39288
10-7/16, 10-1/2	23156K	50,000	117883	95751	84784	77774	72738	68866	63172	59081	57416	55937	54609	53409	52315
		80,000	102380	83158	73634	67546	63172	59809	54864	51312	49865	48580	47426	46385	45435
		100,000	95751	77774	66866	63172	59061	55937	51312	47989	46636	45435	44357	43381	42493
10-15/16, 11	23160K	50,000	133452	108397	95982	88046	82345	77962	71515	66885	64999	63325	61822	60463	59224
		80,000	115902	94142	83359	76467	71515	67709	62110	58089	56451	54997	53692	52511	51436
		100,000	108397	88046	77962	71515	66885	63325	58089	54327	52796	51436	50215	49111	46105
11-15/16,12	23164K	50,000	160143	130076	115178	105655	98814	93554	85818	80262	77999	75989	74186		
		60,000	139082	112970	100031	91760	85818	81251	74532	69706	67741	65996	64430		
		100,000	130076	105655	93554	85818	60262	75989	69706	65193	63355	61723	60258		
12-7/16,12-1/2	23168K	50,000	184609	149949	132775	121797	113910	107847	98930	92524	89916	67599			
		80,000	160331	130229	115314	105779	98930	93664	65919	80356	78091	76079			
		100,000	149949	121797	107847	96930	92524	87599	80356	75153	73034	71152			
13-7/16, 13-1/2	23172K	50,000	189058	153562	135975	124732	116655	110446	101313	94753	92062	89710			
		80,000	164194	133367	118092	108326	101313	95921	87990	62292	79972	77912			
		100,000	153562	124732	110446	101313	94753	69710	82292	76964	74794	72667			
13-15/16,14	23176K	50,000	203515	165306	146373	134270	125576	118892	109061	101999	99124				
		80,000	176750	143566	127123	116612	109061	103256	94718	88585	86086				
		100,000	165306	134270	118892	109061	101999	96570	88585	82649	80514				
23200K SERIES															
8-15/16, 9	23248K	50,000	124562	101176	89588	82180	76859	72768	66751	62429	60669	59106	57704	56435	55279
		80,000	108181	87870	77806	71373	66751	63198	57973	54219	52691	51333	50115	49013	48009
		100,000	101176	82180	72768	66751	62429	59106	54219	50708	49279	48009	46870	45839	44900
9-7/16,9-1/2	23252K	50,000	145686	118333	104780	96117	89893	85108	78071	73016	70958	69129	67469	66005	64653
		60,000	126526	102771	91001	83476	78071	73915	67804	63413	61626	60036	58613	57325	56150
		100,000	116333	96117	85108	76071	73016	69129	63413	59307	57635	56150	54816	53613	52515
10-7/16,10-1/2	23256K	50,000	151246	122850	106780	99765	93324	86357	81051	75603	73666	71768	70065	66524	67121
		80,000	131355	106694	94474	86662	81051	76737	70392	65834	63978	62330	60651	59513	58294
		100,000	122850	99785	66357	81051	75803	71768	65634	61571	59635	58294	56910	55659	54519
10-15/16,11	23260K	50,000	173488	140916	124777	114459	107048	101350	92970	66950	84499	62322	80369	76602	
		60,000	150672	122384	106367	99407	92970	68021	80743	75515	73366	71496	69799	66265	
		100,000	140916	114459	101350	92970	86950	62322	75515	70625	68635	66666	65280	63844	
11-15/16,12	23264K	50,000	192394	156272	138374	126933	118714	112395	103101	96425	93707	91293	89127		
		80,000	167092	135721	120176	110240	103101	97614	69542	83744	81364	79267	77406		
		100,000	156272	126933	112395	103101	96425	91293	63744	78322	76114	74153	72393		
12-7/16 12-1/2	23266K	50000	222421	180662	159970	146743	137241	129936	119192	111474	108332	105541			
		80,000	193170	158903	138932	127445	119192	112848	103517	96614	94085	91681			
		100,000	180662	146743	129936	119192	111474	105541	96614	90545	67993	65726			

* Oil lubrication to the right of the heavy line.

FEATURES/BENEFITS PAGE B15-3	SPECIFICATION/HOW TO ORDER PAGE B15-7	NOMENCLATURE PAGE B15-8	SELECTION PAGE B15-13

SELECTION/DIMENSIONS



USDAF Adapter Mount Pillow Block

Shaft Dia	Housing	Open Housing Part No.**	Closed Housing Part No.**	Bearing Part No.	Dynamic Capacity (C), lbs.	Max RPM LER (Grease)	SNP Part No.	TRIPLE-TECT Part No.	# LER Part No.	Aux Part No.
8-15/16	3248	H4S-USDAF-3248 037464	CH4S-USDAF-3248 037465	23248K 422511	560,000	700	H3248-SNP-815 047628	90TT815 *043571	90LER815 042544	90AUX815 040899
9	3248	H4S-USDAF-3248 037464	CH4S-USDAF-3248 037465	23248K 422511	560,000	700	H3248-SNP-900 047629	90TT900 043572	90LER900 *042545	90AUX900 040995
9-7/16	3152	H4S-USDAF-3152 037461	CH4S-USDAF-3152 037462	23152K 421294	490,000	670	H3152-SNP-907 047630	84TT908 043538	84LER907 *042510	84AUX907 040900
	3252	H4S-USDAF-3252 037442	CH4S-USDAF-3252 037443	23252K 421290	665,000	630	H3252-SNP-907 047646	84TT907 043538	84LER907 *042510	84AUX907 040900
9-1/2	3152	H4S-USDAF-3152 037461	CH4S-USDAF-3152 037462	23152K 421294	490,000	670	H3152-SNP-908 047631	84TT908 422545	84LER908 *422594	84AUX908 040901
	3252	H4S-USDAF-3252 037442	CH4S-USDAF-3252 037443	23252K 421290	655,000	630	H3252-SNP-908 047647	84TT908 422545	84LER908 *422594	84AUX908 040901
10-7/16	3156	H4S-USDAF-3156 037432	CH4S-USDAF-3156 037433	23156K 421285	530,000	630	H3156SNP-1007 045431	94TT1007 047940	94LER1007 *042036	94AUX1007 045778
	3256	H4S-USDAF-3256 037444	CH4S-USDAF-3256 037446	23256K 421291	680,000	600	H325-SNP-1007 047648	94TT1007 047940	94LER1007 *042036	94AUX1007 045778
10-1/2	3156	H4S-USDAF-3156 037432	CH4S-USDAF-3156 037433	23156K 421285	530,000	630	H3156-SNP-1008 047637	94TT1008 047941	94LER1008 *422573	94AUX1008 042396
	3256	H4S-USDAF-3256 037444	CH4S-USDAF-3256 037446	23256K 421291	680,000	600	H3256-SNP-1008 047649	94TT1008 047941	94LER1008 *422573	94AUX1008 042396
10-15/16	060	H4S-USDAF-060 422580	CH4S-USDAF-060 037426	23060K 422582	440,000	630	H3060-SNP-1015 043581	96TT1015 047942	96LER1015 *042037	96AUX1015 045781
	3160	H4S-USDAF-3160 037434	CH4S-USDAF-3160 037435	23160K 421286	600,000	600	H3160-SNP-1015 047638	96TT1015 047942	96LER1015 *042037	96AUX1015 045781
	3260	H4S-USDAF-3260 037447	CH4S-USDAF-3260 037448	23260K 421292	780,000	560	H3260-SNP-1015 047678	96TT1015 047942	96LER1015 *042037	96AUX1015 045781
11	060	H4S-USDAF-060 422580	CH4S-USDAF-060 037426	23060K 422582	440,000	630	H3060-SNP-1100 422576	96TT1100 047943	96LER1100 *422588	96AUX1100 044440
	3160	H4S-USDAF-3160 037434	CH4S-USDAF-3160 037435	23160K 421286	600,000	600	H3160-SNP-1100 045464	96TT1100 047943	96LER1100 *422588	96AUX1100 044440
	3260	H4S-USDAF-3260 037447	CH4S-USDAF-3260 037448	23260K 421292	780,000	560	H3260-SNP-1100 047679	96TT1100 047943	96LER1100 *422588	96AUX1100 044440
11-7/16	064	H4S-USDAF-064 422502	CH4S-USDAF-064 037427	23064K 422531	455,000	600	H3064-SNP-1107 043582	98TT1107 047944	98LER1107 *042038	98AUX1107 045784
11-1/2	064	H4S-USDAF-064 422502	CH4S-USDAF-064 037427	23064K 422531	455,000	600	H3064-SNP-1108 043583	98TT1108 047945	98ER1108 *042039	98AUX1107 045787
11-15/16	064L	H4S-USDAF-064L 422529	CH4S-USDAF-064L 037428	23064K 422531	455,000	600	H3064L-SNP-1115 043584	100TT1115 047946	100ER1115 *042040	100AUX1115 045790
	3164	H4S-USDAF-3164 037436	CH4S-USDAF-3164 037437	23164K 421287	720,000	530	H3164-SNP-115 047639	100TT1115 047946	100ER1115 *042040	100AUX1115 045790
	3264	H4S-USDAF-3264 037449	CH4S-USDAF-3264 037450	23264K 422844	865,000	530	H3264-SNP-1115 047680	100TT115 047946	100ER1115 *042040	100AUX1115 045790

 # NOTE: LER seals are made from Aluminum unless otherwise noted by the * symbol.

If an * appears by the part number, the LER seal is manufactured from Steel.

DODGE



USDAF Adapter Mount Pillow Block

Shaft Dia	Housing	Open Housing Part No.**	Closed Housing Part No.**	Bearing Part No.	Dynamic Capacity (C), lbs.	Max RPM LER (Grease)	SNP Part No.	TRIPLE-TECT Part No.	# LER Part No.	Aux Part No.
12	064L	H4S-USDAF-064L 422529	CH4S-USDAF-064L 037428	23064K 422531	455,000	600	H3064L-SNP-1200 422525	100TT1200 047947	100ER1200 *422535	100AUX1200 045793
	3164	H4S-USDAF-3164 037436	CH4S-USDAF-3164 037437	23164K 421287	720,000	530	H3164-SNP-1200 050531	100TT1200 047947	100ER1200 *422535	100AUX1200 045793
	3264	H4S-USDAF-3264 037449	CH4S-USDAF-3264 037450	23264K 422844	865,000	530	H3264-SNP-1200 422843	100TT1200 047947	100ER1200 *422535	100AUX1200 045793
12-7/16	068	H4S-USDAF-068 035183	CH4S-USDAF-068 035185	23068K 421282	530,000	560	H3064-SNP-1207 047632	102TT1207 047948	102ER1207 *046498	102AUX1207 046567
	3168	H4S-USDAF-3168 035945	CH4S-USDAF-3168 035946	23168K 052081	830,000	500	H3168-SNP-1207 047641	102TT1207 047948	102ER1207 *046498	102AUX1207 046567
	3268	H4S-USDAF-3268 037451	CH4S-USDAF-3268 037452	23268K 421293	1,000,000	480	H328-SNP-1207 047681	102TT1207 047948	102ER1207 *046498	102AUX1207 046567
12-1/2	068	H4S-USDAF-068 035183	CH4S-USDAF-068 035185	23068K 421282	530,000	560	H3068-SNP-1208 047635	102TT1208 047949	102ER1208 *046499	102AUX1208 046568
	3168	H4S-USDAF-3168 035945	CH4S-USDAF-3168 035946	23168K 052081	830,000	500	H31680-SNP-1208 047642	102TT1208 047949	102ER1208 *046499	102AUX1208 046568
	3268	H4S-USDAF-3268 037451	CH4S-USDAF-3268 037452	23268K 421293	1,000,000	480	H3268-SNP-1208 047682	102TT1208 047949	102ER1208 *046499	102AUX1208 046568
12-15/16	072	H4S-USDAF-072 044164	CH4S-USDAF-072 037429	23072K 422036	550,000	530	H3072-SNP-1215 043635	104TT1215 047950	104ER1215 *042090	102AUX1215 045796
13	072	H4S-USDAF-072 044164	CH4S-USDAF-072 037429	23072K 422036	550,000	530	H3072-SNP-1300 043636	104TT1300 047951	072ER1300 *042091	104AUX1300 045799
13-7/16	072L	H4S-USDAF-072L 044165	CH4S-USDAF-072L 037430	23072K 422036	550,000	530	H3072L-SNP-1307 043637	106TT1307 047952	106ER1307 *042092	106AUX1307 045802
	3172	H4S-USDAF-3172 037438	CH4S-USDAF-3172 037439	23172K 421288	850,000	480	H3172-SNP-1307 047643	106TT1307 047952	106ER1307 *042092	106AUX1307 045802
13-1/2	072L	H4S-USDAF-072L 044165	CH4S-USDAF-072L 037430	23072 422036	550,000	530	H3072L-SNP-1308 043638	106TT1308 047953	106ER1308 *042093	106AUX1308 045805
	3172	H4S-USDAF-3172 037438	CH4S-USDAF-3172 037439	23172K 421288	850,000	480	H3172-SNP-1308 045434	106TT1308 047953	106ER1308 *042093	106AUX1308 045805
13-15/16	076	H4S-USDAF-076 044166	CH4S-USDAF-076 037431	23076K 422054	570,000	500	H3076-SNP-1315 043639	108TT1315 047954	108ER1315 *042094	108AUX1315 045808
	3176	H4S-USDAF-3176 037440	CH4S-USDAF-3176 037441	23176K 421289	915,000	450	H3176-SNP-1315 047644	108TT1315 047954	108ER1315 *042094	108AUX1315 045808
14	076	H4S-USDAF-076 044166	CH4S-USDAF-076 037431	23076K 422054	570,000	500	H3076-SNP-1400 043640	108TT1400 047955	108ER1400 *042095	108AUX1400 046569
	3176	H4S-USDAF-3176 037440	CH4S-USDAF-3176 037441	23176K 421289	915,000	450	H3176-SNP-1400 047645	108TT1400 047955	108ER1400 *042095	108AUX1400 046569
15	080	H4S-USDAF-080 035417	CH4S-USDAF-080 035418	23080K 421283	680,000	450	H3080-SNP-1500 040830	110TT1500 047956	110ER1500 *050474	110AUX1500 046570
15-3/4	84	H4S-USDAF-084 035943	CH4S-USDAF-084 035944	23084K 421284	710,000	450	H3084-SNP-1512 047636	112TT1512 047957	112ER1512 *046566	112AUX1512 046572

 # NOTE: LER seals are made from Aluminum unless otherwise noted by the * symbol.

If an * appears by the part number, the LER seal is manufactured from Steel.

FEATURES/BENEFITS PAGE B15-3	SPECIFICATION/HOW TO ORDER PAGE B15-7	NOMENCLATURE PAGE B15-8	SELECTION PAGE B15-13

SELECTION/DIMENSIONS

USDAF Housing Dimensions

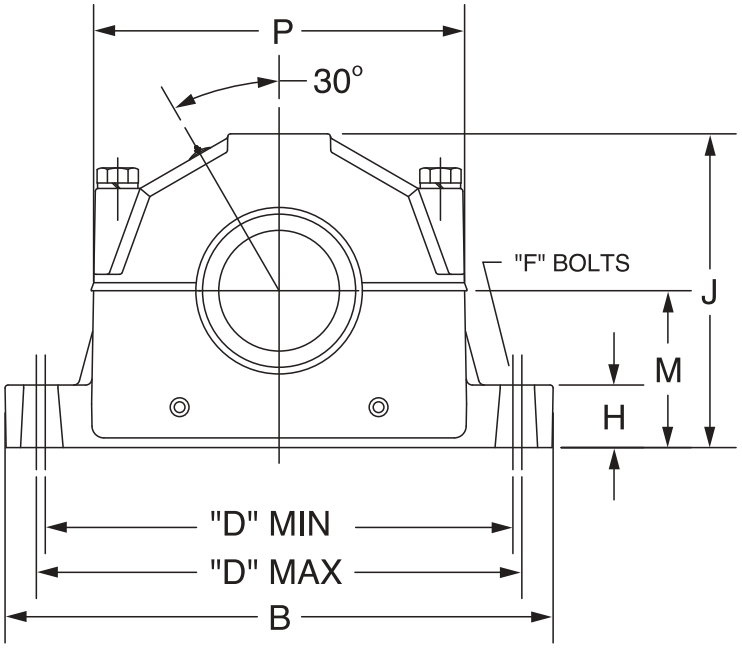

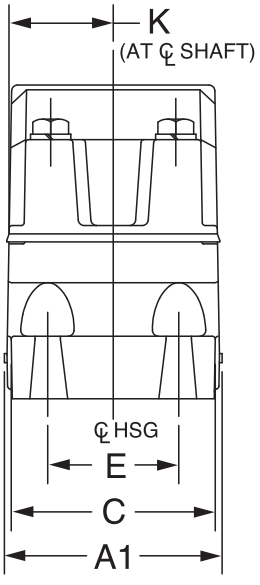

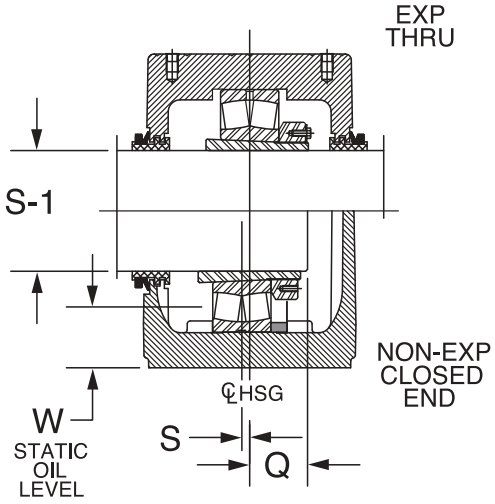

23000 SERIES
(REQUIRES (1) STABILIZING RING)

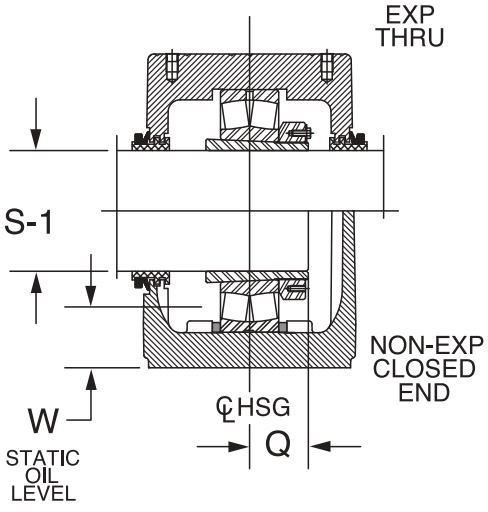

23100, 23200 SERIES
(REQUIRES (2) STABILIZING RINGS)



USDAF Housing Dimensions

S-1 Shaft Size	Housing	Bearing Number	A1 ▲	B	C	D		E	F Base Bolt Size 4-Req'd	H
						Min	Max			
8-15/16 9	3248	23248K	14.28	35.00	13.75	29.00	30.50	8.75	1-5/8	3.75
9-7/16	3152	23152K								
9-1/2	3252	23252K	16.36	38.25	14.75	31.63	34.63	9.00	1-5/8	3.38
10-7/16	3156	23156K								
10-1/2	3256	23256K								
10-15/16	60	23060K								
11	3160	23160K								
11-7/16 11-1/2	64	23064K								
11-15/16 12	064L									
12-7/16 12-1/2	68	23068K	15.85	39.00	15.25	32.00	34.00	10.00	1-7/8	4.19

S-1 Shaft Size	Housing	Bearing Number	J	K	M	P	Q ★	S •	Total Exp.
8-15/16 9	3248	23248K	20.88	6.83	10.25	23.94	4.88	0.00	3/8
9-7/16	3152	23152K					4.63		3/8
9-1/2	3252	23252K	23.44	7.72	12.00	26.50	5.42	0.00	3/4
10-7/16	3156	23156K					5.00	0.00	3/4
10-1/2	3256	23256K					4.58	0.00	3/4
10-15/16	60	23060K					4.31	0.19	3/8
11	3160	23160K					5.33	0.00	3/4
11-7/16 11-1/2	64	23064K					4.45	0.19	3/8
11-15/16 12	064L								3/8
12-7/16 12-1/2	68	23068K	24.00	7.47	12.00	26.38	4.81	0.19	3/8

▲ Housing Width With Drain Plugs

★ Distance Shaft Should Extend Beyond Housing Centerline If Pillow Block Is Closed End Style

• Non-expansion Bearing Offset From Centerline. For Expansion Bearing S = 0

SELECTION/DIMENSIONS

USDAF Housing Dimensions

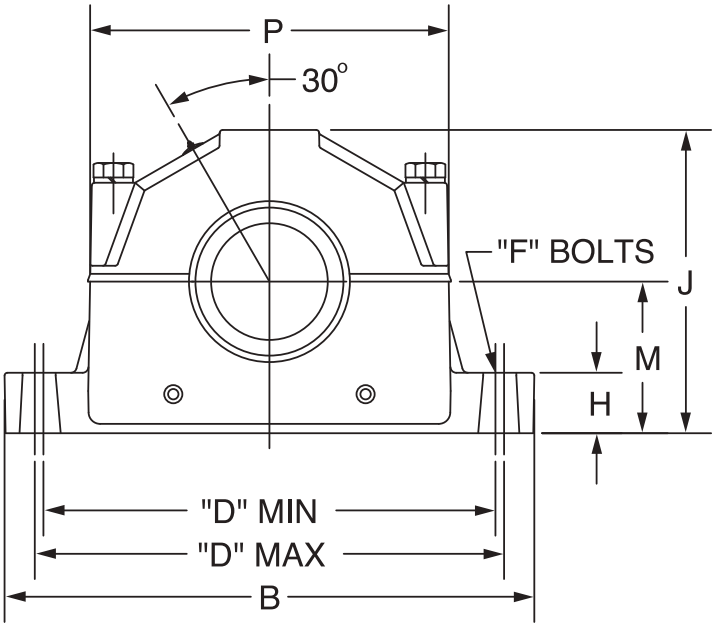

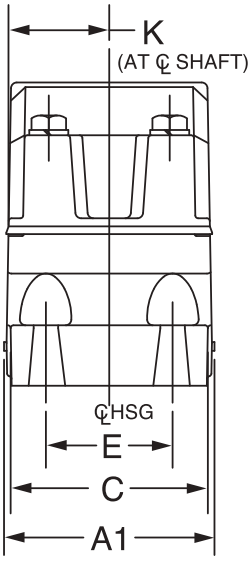

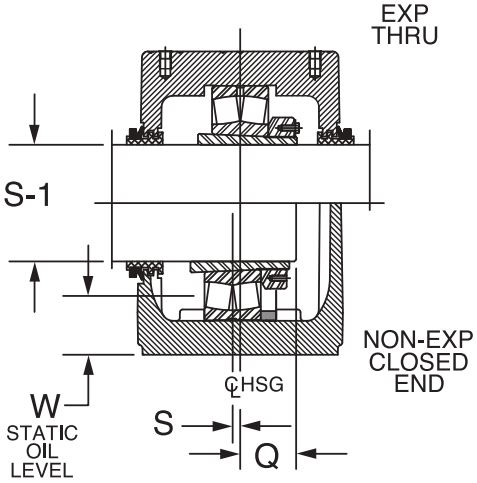

23000 SERIES
(REQUIRES (1) STABILIZING RING)

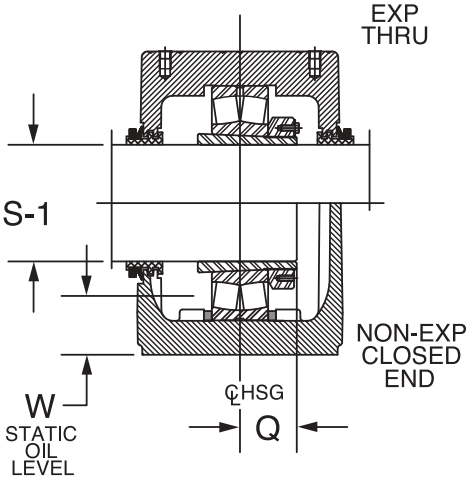

23100, 23200 SERIES
(REQUIRES (2) STABILIZING RINGS)



USDAF Housing Dimensions

S-1 Shaft Size	Housing	Bearing Number	A1 ▲	B	C	D		E	F Base Bolt Size 4-Req'd	H
						Min	Max			
10-15/16 11	3260	23260K	16.98	41.75	15.75	35.00	36.50	10.25	1-7/8	4.50
11-15/16 12	3164	23164K								
12-15/16 13	072	23072K								
13-7/16 13-1/2	072L									
13-15/16 14	076	23076K								
11-15/16 12	3264	23264K	18.31	43.58	17.75	36.75	38.25	10.75	2	5.00
12-7/16	3168	23168K								
12-1/2	3268	23268K	18.38	46.00	17.13	39.25	40.75	11.00	2	5.25
13-7/16 13-1/2	3172	23172K								
13-15/16 14	3176	23176K								
15	080	23080K								
15-3/4	084	23084K								

S-1 Shaft Size	Housing	Bearing Number	J	K	M	P	Q ★	S •	Total Exp.
10-15/16 11	3260	23260K	25.75	8.16	12.81	29.13	5.95	0.00	3/4
11-15/16 12	3164	23164K					5.72	0.00	3/4
12-15/16 13	072	23072K					4.81	0.19	3/8
13-7/16 13-1/2	072L								3/8
13-15/16 14	076	23076K					5.95	0.19	3/8
11-15/16 12	3264	23264K	28.00	8.70	14.00	31.13	6.22	0.00	1/2
12-7/16	3168	23168K					6.00	0.00	1/2
12-1/2	3268	23268K	29.00	8.75	14.50	33.17	6.66	0.00	1/2
13-7/16 13-1/2	3172	23172K					6.14	0.00	3/4
13-15/16 14	3176	23176K					6.31	0.00	3/4
15	080	23080K					5.36	0.19	3/8
15-3/4	084	23084K					5.39	0.19	3/8

▲ Housing Width With Drain Plugs

★ Distance Shaft Should Extend Beyond Housing Centerline If Pillow Block Is Closed End Style

• Non-expansion Bearing Offset From Centerline. For Expansion Bearing S = 0

FEATURES/BENEFITS PAGE B15-3	SPECIFICATION/HOW TO ORDER PAGE B15-7	NOMENCLATURE PAGE B15-8	SELECTION PAGE B15-13

SELECTION/DIMENSIONS

USDAF Pillow Block Seals

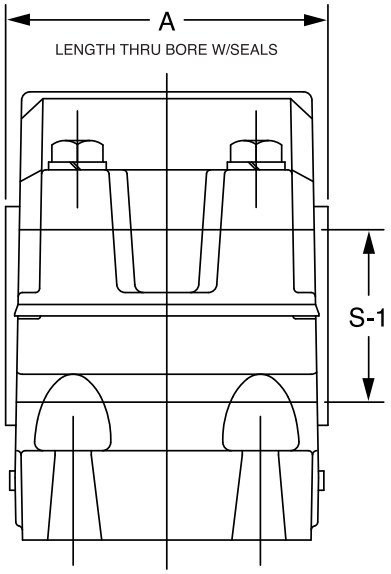

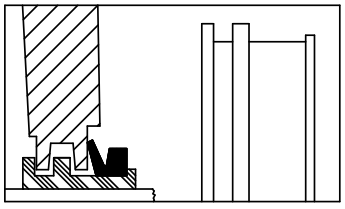

TRIPLE-TECT SEAL
General purpose seal for
wet or dirty environments

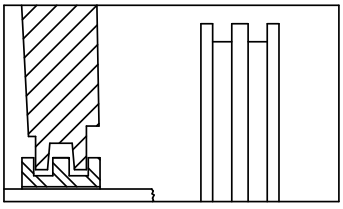

LER SEAL
High speed seal for
relatively clean environments

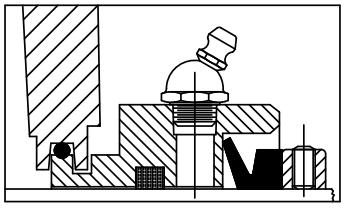

AUXILIARY TACONITE SEAL
For dusty environments
and low to moderate speeds



USDAF Pillow Block Seals - Inch

S-1 Shaft Size (Inch)	Housing	Seal Group	Part Numbers			A		
			TRIPLE-TECT (TT)	Metal Labyrinth (ER)	Auxiliary (AUX)	TT	ER	AUX*
10-15/16	060	96	047942	042037	045781	16.53	15.25	19.84
11			047943	422588	044440			19.59
11-7/16	064	98	047944	042038	045784			19.84
11-1/2			047945	042039	045787			
11-15/16	064L	100	047946	042040	045790			
2			047947	422535	045793			
12-7/16	068	102	047948	046498	046567	16.09	14.81	19.41
12-1/2			047949	046499	046568			
12-15/16	072	104	047950	042090	045796	17.44	16.23	20.52
13			047951	042091	045799			
13-7/16	072L	106	047952	042092	045802			
13-1/2			047953	042093	045805			
13-15/16	076	108	047954	042094	045808			20.77
14			047955	042095	046569			
15	080	110	047956	050474	046570	18.63	17.42	21.97
15-3/4	084	112	047957	046566	046572			22.23
9-7/16	3152	84	043538	042510	040900	13.86	13.44	18.25
9-1/2			422545	422594	040901			
10-7/16	3156	94	047940	042036	045778	16.53	15.17	19.64
10-1/2			047941	422573	042396			
10-15/16	3160	96	047942	042037	045781		15.25	19.84
11			047943	422588	044440			19.59
11-15/16	3164	100	047946	042040	045790	17.44	16.16	20.75
12			047947	422535	045793			
12-7/16	3168	102	047948	046498	046567	18.63	17.36	21.94
12-1/2			047949	046499	046568			
13-7/16	3172	106	047952	042092	045802		17.42	21.71
13-1/2			047953	042093	045805			
13-15/16	3176	108	047954	042094	045808			21.97
14			047955	042095	046569			
8-15/16	3248	90	043571	042544	040899	14.78	13.44	18.25
9			043572	042545	040995			
9-7/16	3252	84	043538	042510	040900	15.48	15.06	19.88
			422545	422594	040901			
10-7/16	3256	94	047940	042036	045778	16.53	15.17	19.64
10-1/2			047941	422573	042396			
10-15/16	3260	96	047942	042037	045781	17.44	16.16	20.75
11			047943	422588	044440			20.50
11-15/16	3264	100	047946	042040	045790	18.63	17.36	21.94
12			047947	422535	045793			
12-7/16	3268	102	047948	046498	046557		17.36	21.95
12-1/2			047949	046499	046568			

* Includes Collar

FEATURES/BENEFITS PAGE B15-3	SPECIFICATION/HOW TO ORDER PAGE B15-7	NOMENCLATURE PAGE B15-8	SELECTION PAGE B15-13

SELECTION/DIMENSIONS

DODGE



USDAF 23000, 23100, 23200 Spherical Roller Bearings

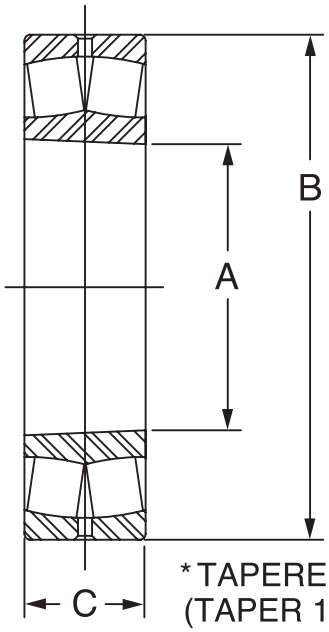

*TAPERED BORE
(TAPER 1:12 ON DIAMETER)

Housing	Bearing Number	Part Number	Approx. Weight (lbs)	A* inch (mm)	B inch (mm)	C inch (mm)
060	23060K	**422582**	150	11.8110(300)	18.1102(460)	4.6457(118)
064/064L	23064K	**422531**	161	12.5984(320)	18.8976(480)	4.7638(121)
068	23068K	**421282**	218	13.3858(340)	20.4724(520)	5.2362(133)
072/072L	23072K	**422036**	226	14.1732(360)	21.2598(540)	5.2756(134)
076	23076K	**422054**	240	14.9606(380)	22.0472(560)	5.3150(135)
080	23080K	**421283**	309	15.7480(400)	23.6220(600)	5.8268(148)
084	20384K	**421284**	330	16.5354(420)	24.4094(620)	5.9055(150)
3152	23152K	**421294**	192	10.2362(260)	17.3228(440)	5.6693(144)
3156	23156K	**421285**	205	11.0236(280)	18.1102(460)	5.7488(146)
3160	23160K	**421286**	268	11.8110(300)	19.6850(500)	6.2992(160)
3164	23164K	**421287**	350	12.5984(320)	21.2598(540)	6.9291(176)
3168	23168K	**052081**	440	13.3858(340)	22.8346(580)	7.4803(190)
3172	23172K	**421288**	463	14.1732(360)	23.6220(600)	7.5590(192)
3176	23176K	**421289**	487	14.9606(380)	24.4094(620)	7.6378(194)
3248	23248K	**422511**	225	9.4488(240)	17.3228(440)	6.2992(160)
3252	23252K	**421290**	295	10.2362(260)	18.8976(480)	6.8504(174)
3256	23256K	**421291**	311	11.0236(280)	19.6850(500)	6.9291(176)
3260	23260K	**421292**	405	11.8110(300)	21.2598(540)	7.5590(192)
3264	23264K	**422844**	519	12.5984(320)	22.8346(580)	8.1890(208)
3268	23268K	**421293**	629	13.3858(340)	24.4094(620)	8.8189(224)



USDAF SNP Adapter Assembly

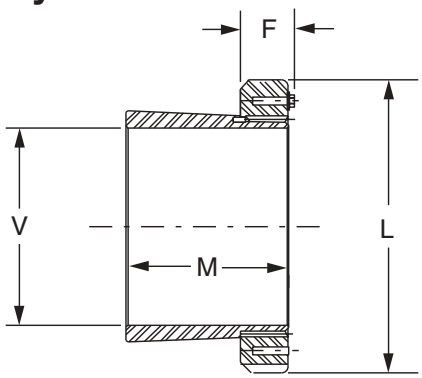

Housing	Bearing Number	SNP Number	Part Number	Approx Weight (Lbs)	V Shaft Size (In.)	L (In.)	F Max (In.)	M (In.)
60	23060K	SNP3060-1015 SNP3060-1100	**043581** **422576**	59.0 56.8	10-15/16 11	14.19	1.94	6.72
64	23064K	SNP3064-1107 SNP3064-1108	**043582** **043583**	82.7 80.5	11-7/16 11-1/2	15.01	2.03	6.94
064L		SNP3064-1115 SNP3064-1200	**043584** **422525**	65.0 62.5	11-15/16 12			
68	23068K	SNP3068-1207 SNP3068-1208	**047632** **047635**	78.0 75.4	12-7/16 12-1/2	15.76	2.16	7.53
72	23072K	SNP3072-1215 SNP3072-1300	**043635** **043636**	107.7 105.0	12-15/16 13			
072L		SNP3072-1307 SNP3072-1308	**043637** **043638**	86.0 83.2	13-7/16 13-1/2	16.51	2.16	7.57
76	23076K	SNP3076-1315 SNP3076-1400	**043639** **043640**	94.3 91.5	13-15/16 14	17.76	2.36	7.73
80	23080K	SNP3080-1500	**040830**	100.0	15	18.51	2.52	8.4
84	23084K	SNP3084-1512	**047636**	105.0	15-3/4	19.32	2.52	8.49
3152	23152K	SNP3152-907 SNP3152-908	**047630** **047631**	44.0 42.0	9-7/16 9-1/2	12.19	1.77	7.58
3156	23156K	H3156-SNP-1007 H3156-SNP-1008	**045431** **047637**	30.06 28.4	10-7/16 10-1/2	13.01	1.85	7.76
3160	23160K	H3160-SNP-1015 H3160-SNP-1100	**047638** **045464**	65.0 62.4	10-15/16 11	14.19	1.94	8.37
3164	23164K	H3164-SNP-1115 H3164-SNP-1200	**047639** **050531**	74.0 71.0	11-15/16 12	15.01	2.03	9.1
3168	23168K	H3168-SNP-1207 H3168-SNP-1208	**047641** **047642**	117.2 113.8	12-7/16 12-1/2	15.76	2.16	9.78
3172	23172K	H3172-SNP-1307 H3172-SNP-1308	**047643** **045434**	120.0 116.3	13-7/16 13-1/2	16.51	2.16	9.85
3176	23176K	H3176-SNP-1315 H3176-SNP-1400	**047644** **047645**	125.0 121.1	13-15/16 14	17.76	2.36	10.06
3248	23248K	SNP-148-815 SNP-148-900	**047628** **047629**	48.5 46.5	8-15/16 9	11.44	1.7	8.1
3252	23252K	H3252-SNP-907 H3252-SNP-908	**047646** **047647**	54.5 52.2	9-7/16 9-1/2	12.19	1.75	8.76
3256	23256K	H3256-SNP-1007 H3256-SNP-1008	**047648** **047649**	59.0 56.4	10-7/16 10-1/2	13.01	1.85	8.94
3260	23260K	H3260-SNP-1015 H3260-SNP-1100	**047678** **047679**	69.5 65.5	10-15/16 11	14.19	1.94	9.63
3264	23264K	H3264-SNP-1115 H3264-SNP-1200	**047680** **422843**	98.0 94.5	11-15/16 12	15.01	2.03	10.36
3268	23268K	H3268-SNP-1207 H3268-SNP-1208	**047681** **047682**	132.1 128.2	12-7/16 12-1/2	15.76	2.16	11.12

SELECTION/DIMENSIONS



USAF 600 Adapter Mount Pillow Block with TRIPLE-TECT Seal Assembly

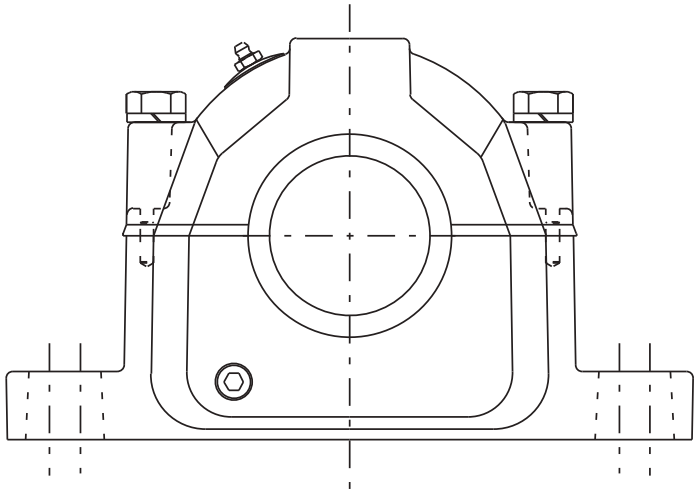

Table 17: Radial & Thrust Factors For USAF Spherical Bearings

Shaft Size		Bearing Series	e	$F_A/F_R \leq e$		$F_A/F_R > e$		Adapter Maximum Allowable Thrust Load Pound †	Dynamic Capacity (C) Pounds	Static Capacity (Co) Lbs.	Maximum RPM	
Adapter Mounted Inches	Direct Mount mm			X	Y	X	Y				Grease	Oil
1-11/16	50	22310	.36	1	1.9	0.67	2.8	1348	51,000	50,000	3400	4300
1-15/16	55	22311	.36	1	1.9	0.67	2.8	1672	60,000	58,500	3200	4000
	60	22312	.35	1	1.9	0.67	3	-	69,500	69,500	2800	3600
2-3/16	65	22313	.34	1	2	0.67	3	2104	78,000	81,500	2600	3400
	70	22314	.34	1	2	0.67	3	-	86,500	86,500	2400	3200
2-7/16	75	22315	.34	1	2	0.67	3	2782	100,000	102,000	2200	3000
2-11/16	80	22316	.34	1	2	0.67	3	3128	112,000	114,000	2200	3000
2-15/16	85	22317	.33	1	2	0.67	3	3438	122,000	125,000	2000	2800
3-7/16	100	22320	.34	1	2	0.67	3	4920	183,000	208,000	1700	2200
3-15/16	110	22322	.33	1	2.1	0.67	3.1	5934	212,000	240,000	1500	1900
4-3/16	120	22324	.33	1	2.1	0.67	3.1	6959	240,000	265,000	1400	1800
4-7/16	130	22326	.33	1	2.1	0.67	3.1	8152	280,000	310,000	1300	1700
4-15/16	140	22328	.34	1	2	0.67	3	9628	325,000	365,000	1200	1600
5-3/16	150	22330	.33	1	2	0.67	3	10923	365,000	415,000	1100	1500
5-7/16	160	22332	.37	1	1.8	0.67	2.7	12298	325,000	365,000	1000	1400
5-15/16	170	22334	.37	1	1.8	0.67	2.7	13755	360,000	475,000	950	1300
6												
6-15/16	190	22338	.28	1	2.4	0.67	3.6	11786	415,000	570,000	1200	1300
7			.37	1	1.8	0.67	2.7	16910			850	1100

If the thrust load exceeds adapter maximum allowable thrust load, auxiliary methods of carrying thrust are required.

DODGE



USAF 600 Adapter Mount Pillow Block with TRIPLE-TECT Seal Assembly

Shaft Dia S-1	Complete Pillow Block Part #	Housing W/ Stab Ring Part No.	Bearing Part No.	Dynamic Capacity (C), lbs."	Max RPM (Grease)	SNW Part No.	TRIPLE-TECT Part No.	TTDN Part No.	# LER Part No.	End Cover
1-11/16	P2B610-USAF-111TT 035929	H2S-610-USAF 035431	BRG22310KC3 423372	42,500	3,400	H2310-SNW-111 046680	10TT111 043579	---	10LER111 * 042199	EC10 040701
1-15/16	P2B611-USAF-115TT 039404	H2S-611-USAF 039760	BRG22311KC3 423102	50,000	3,200	H2311-SNW-115 046551	12TT115 043540	12TTDN115 039582	12LER115 042512	EC12 040702
	P4B611-USAF-115TT 039413	H4S-611-USAF 039762	BRG22311KC3 423102	50,000	3,200	H2311-SNW-115 046551	12TT115 043540	12TTDN115 039582	12LER115 042512	EC12 040702
2-3/16	P2B613-USAF-203TT 039405	H2S-613-USAF 039764	BRG22313KC3 423104	65,500	2,600	H2313-SNW-203 046552	14TT203 043541	14TTDN203 039583	14LER203 042513	EC14 040703
	P4B613-USAF-203TT 039414	H4S-613-USAF 039766	BRG22313KC3 423104	65,500	2,600	H2313-SNW-203 046552	14TT203 043541	14TTDN203 039583	14LER203 042513	EC14 040703
2-7/16	P2B615-USAF-207TT 039406	H2S-615-USAF 039768	BRG22315KC3 423106	83,000	2,200	H2315-SNW-207 046553	20TT207 043542	20TTDN207 039538	20LER207 042514	EC20 040704
	P4B615-USAF-207TT 039415	H4S-615-USAF 039770	BRG22315KC3 423106	83,000	2,200	H2315-SNW-207 046553	20TT207 043542	20TTDN207 039538	20LER207 042514	EC20 040704
2-11/16	P2B616-USAF-211TT 035930	H2S-616-USAF 035432	BRG22316KC3 423373	93,000	2,200	H2316-SNW-211 046682	24TT211 043544	24TTDN211 039855	24LER211 042516	EC24 040705
	P4B616-USAF-211TT 035931	H4S-616-USAF 035433	BRG22316KC3 423373	93,000	2,200	H2316-SNW-211 046682	24TT211 043544	24TTDN211 039855	24LER211 042516	EC24 040705
2-15/16	P2B617-USAF-215TT 039407	H2S-617-USAF 039772	BRG22317KC3 423108	102,000	2,000	H2317-SNW-215 046554	28TT215 043546	28TTDN215 039530	28LER215 042518	EC28 040706
	P4B617-USAF-215TT 039416	H4S-617-USAF 039774	BRG22317KC3 423108	102,000	2,000	H2317-SNW-215 046554	28TT215 043546	28TTDN215 039530	28LER215 042518	EC28 040706
3-7/16	P4B620-USAF-307TT 039417	H4S-620-USAF 039776	BRG22320KC3 423110	146,000	1,700	H2320-SNW-307 046555	46TT307 043549	46TTDN307 039859	46LER307 042521	EC46 040708
4-3/16	P4B624-USAF-403TT 039419	H4S-624-USAF 039780	BRG22324KC3 422140	204,000	1,400	H2324-SNW-403 046557	52TT403 043553	52TTDN403 039863	52LER403 042525	EC52 040710
4-7/16	P4B626-USAF-407TT 039420	H4S-626-USAF 039781	BRG22326KC3 423114	236,000	1,300	H2326-SNW-407 046558	54TT407 043554	54TTDN407 039864	54LER407 042526	EC54 040711
4-15/16	P4B628-USAF-415TT 039421	H4S-628-USAF 039553	BRG22328KC3 422035	275,000	1,200	H2328-SNW-415 046559	56TT415 043556	56TTDN415 039866	56LER415 042528	EC56 040712
5-3/16	P4B630-USAF-503TT 039422	H4S-630-USAF 039782	BRG22330KC3 423116	310,000	1,100	H2330-SNW-503 046560	58TT503 043558	---	58LER503 042530	EC58 040713
5-7/16	P4B632-USAF-507TT 039423	H4S-632-USAF 039783	BRG22332KC3 423118	325,000	1,000	H2332-SNW-507 046561	60TT507 043559	---	60LER507 042531	EC60 040714
5-15/16	P4B634-USAF-515TT 039424	H4S-634-USAF 039784	BRG22334KC3 423120	360,000	950	H2332-SNW-515 046562	64TT515 043560	---	64LER515 042533	EC64 040681
6	P4B634-USAF-600TT 039425	H4S-634-USAF 039784	BRG22334KC3 423120	360,000	950	H2334-SNW-600 046563	64TT600 043561	---	64LER600 042534	EC64 040681
6-15/16	P4B638-USAF-615TT 039426	H4S-638-USAF 039785	BRG22338KC3 423122	415,000	850	H2338-SNW-615 046564	72TT615 043564	---	72LER615 042537	EC72 040683
7	P4B638-USAF-700TT 039427	H4S-638-USAF 039785	BRG22338KC3 423122	415,000	850	H2338-SNW-700 046565	72TT700 043565	---	72LER700 042538	EC72 040683

 # NOTE: LER seals are made from Aluminum unless otherwise noted by the * symbol.

If an * appears by the part number, the LER seal is manufactured from Steel.

FEATURES/BENEFITS PAGE B15-3	SPECIFICATION/HOW TO ORDER PAGE B15-7	NOMENCLATURE PAGE B15-8	SELECTION PAGE B15-13

SELECTION/DIMENSIONS

USAF 600 Housing Dimensions - Inch

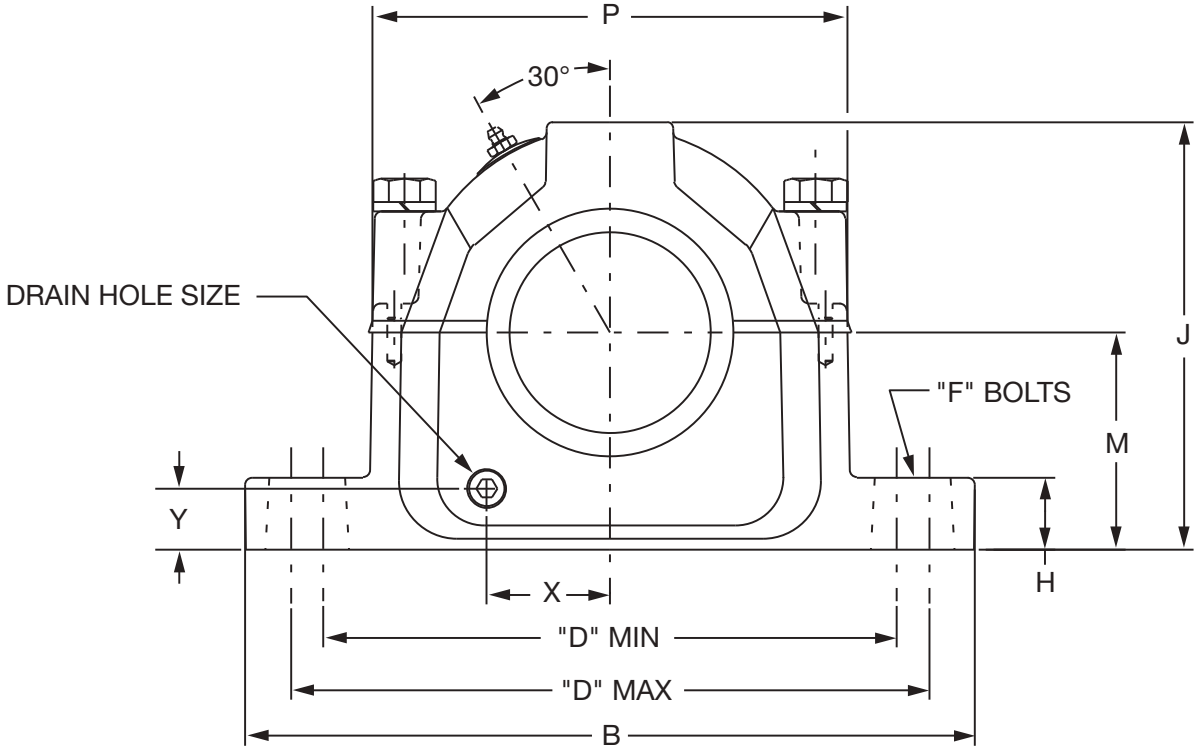

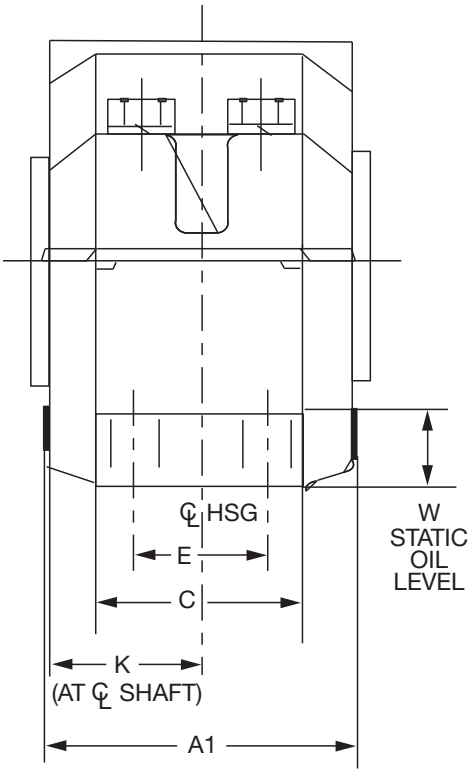

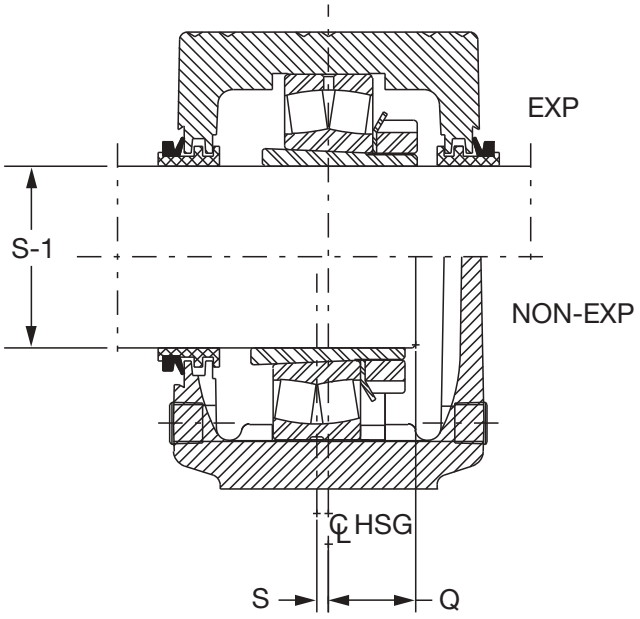

FEATURES/BENEFITS PAGE B15-3	SPECIFICATION/HOW TO ORDER PAGE B15-7	NOMENCLATURE PAGE B15-8	SELECTION PAGE B15-13



USAF 600 Housing Dimensions - Inch

S1 Shaft Size	Housing	A1 ▲	B	C	D				E	F	
					2-Bolt		4-Bolt			Bolt Dia.	
					Min	Max	Min	Max		2-Bolt	4-Bolt
1-11/16	610	4.70	10.63	2.75	7.75	9.00	-	-	-	5/8	-
1-15/16	611	4.64	11.00	3.38	8.13	9.50	8.13	9.50	1.88	5/8	1/2
2-3/16	613	5.44	12.59	3.50	9.63	11.00	9.63	11.00	2.13	3/4	5/8
2-7/16	615	6.16	13.63	3.88	10.25	11.75	10.38	11.63	2.13	3/4	5/8
2-11/16	616	6.38	14.17	3.88	10.88	12.38	10.63	12.50	2.13	3/4	5/8
2-15/16	617	6.78	15.36	4.34	11.63	13.13	11.63	13.13	2.38	7/8	3/4
3-7/16	620	8.05	16.50	4.72	-	-	13.25	14.50	2.75	-	3/4
4-3/16	624	9.36	20.88	6.25	-	-	16.75	18.25	3.75	-	1
4-7/16	626	9.92	21.66	6.25	-	-	17.38	19.25	3.75	-	1
4-15/16	628	9.91	24.75	6.75	-	-	19.38	21.63	4.25	-	1
5-3/16	630	10.41	26.75	7.13	-	-	20.88	23.63	4.63	-	1
5-7/16	632	10.81	28.00	7.50	-	-	21.63	24.38	4.50	-	1-1/4
5-15/16 6	634	11.53	28.75	8.00	-	-	22.50	25.00	5.00	-	1-1/4
6-15/16 7	638	12.30	32.75	8.88	-	-	24.75	27.88	5.25	-	1-1/2

S-1 Shaft Size	Housing	H	J	K	M	P	Q ★	S ●	W Static Oil Level	X	Y	Drain Hole Size
1-11/16	610	1.41	5.72	2.20	3.00	6.13	1.38	0.22	1.38	1.53	0.98	1/8-27NPSI
1-15/16	611	1.28	6.19	2.16	3.25	6.50	1.42	0.13	1.44	1.66	1.03	1/8-27NPSI
2-3/16	613	1.06	6.75	2.42	3.50	7.44	1.98	0.19	1.41	1.97	0.95	1/4-18NPSF
2-7/16	615	1.44	7.75	2.84	4.00	8.66	1.77	0.19	1.59	2.25	1.13	3/8-18NPSF
2-11/16	616	1.22	8.25	2.95	4.25	9.03	1.83	0.19	1.69	2.38	1.17	3/8-18NPSF
2-15/16	617	1.66	8.75	3.16	4.50	9.78	1.91	0.19	1.75	2.63	1.25	3/8-18NPSF
3-7/16	620	1.50	10.25	3.64	5.25	11.25	2.30	0.19	2.03	3.19	1.38	1/2-14NPSF
4-3/16	624	2.38	12.50	4.33	6.31	14.94	2.64	0.19	2.38	3.59	1.33	1/2-14NPSF
4-7/16	626	2.34	13.31	4.63	6.69	14.91	2.84	0.19	2.44	4.03	1.33	1/2-14NPSF
4-15/16	628	2.88	14.56	4.63	7.06	16.81	3.09	0.19	2.56	4.16	1.33	1/2-14NPSF
5-3/16	630	3.00	15.13	4.88	7.50	17.19	3.27	0.19	2.63	4.22	1.63	1/2-14NPSF
5-7/16	632	3.13	15.81	5.26	7.88	18.00	3.44	0.19	2.69	4.75	1.61	1/2-14NPSF
5-15/16 6	634	3.38	16.63	5.44	8.25	19.00	3.59	0.19	2.75	4.91	1.53	1/2-14NPSF
6-15/16 7	638	3.75	18.88	5.81	9.50	21.25	3.89	0.19	3.38	5.44	2.03	1/2-14NPSF

▲ Housing width with drain plugs

★ Distance shaft should extend beyond housing centerline if pillow block is closed end style

● Non-expansion bearing offset from centerline. For expansion bearing S = 0.

SELECTION/DIMENSIONS

DODGE



USAF 22300K Spherical Roller Bearings

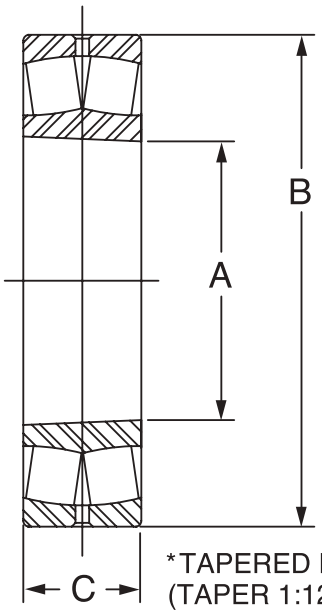

Shaft Size (Inch)	Housing	Bearing No.	Part No.	Approx. Wt (lbs)	A* Inch (mm)	B Inch (mm)	C Inch (mm)
1-7/16	609	22309K	**423100**	3.0	1.7717 (45)	3.9370 (100)	1.4171 (36)
1-11/16	610	22310K	**423372**	3.9	1.9685 (50)	4.3307 (110)	1.5748 (40)
1-15/16	611	22311K	**423102**	5.1	2.1654 (55)	4.7244 (120)	1.6929 (43)
2-3/16	613	22313K	**423104**	7.8	2.5591 (65)	5.5118 (140)	1.8898 (48)
2-7/16	615	22315K	**423106**	11.5	2.9528 (75)	6.2992 (160)	2.1654 (55)
2-11/16	616	22316K	**423373**	13.1	3.1496 (80)	6.6929 (170)	2.2835 (58)
2-15/16	617	22317K	**423108**	15.7	3.3465 (85)	7.0866 (180)	2.3622 (60)
3-7/16	620	22320K	**423110**	28.0	3.9370 ((100)	8.4646 (215)	2.8740 (73)
3-15/16	622	22322K	**423112**	38.8	4.3307 (110)	9.4488 (240)	3.1496 (80)
4-3/16	624	22324K	**422140**	48.3	4.7244 (120)	10.2362 (260)	3.3858 (86)
4-7/16	626	22326K	**423114**	59.7	5.1181 (130)	11.0236 (280)	3.6614 (93)
4-15/16	628	22328K	**422035**	75.4	5.5118 (140)	11.8110 (300)	4.0157 (102)
5-3/16	630	22330K	**423116**	90.4	5.9055 (150)	12.5984 (320)	4.2520 (108)
5-7/16	632	22332K	**423118**	113.0	6.2992 (160)	13.3858 (340)	4.4882 (114)
5-15/16 6	634	22334K	**423120**	132.0	6.6929 (170)	14.1732 (360)	4.7244 (120)
6-15/16 7	638	22338K	**423122**	179.0	7.4803 (190)	15.7480 (400)	5.1969 (132)



USAF 600 Adapter Assembly (SNW)

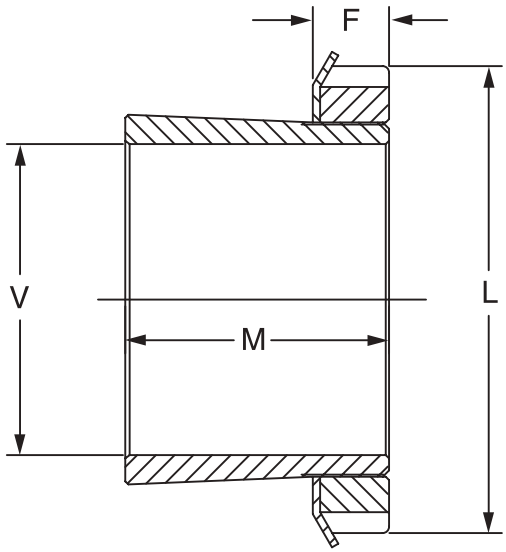

V Shaft Dia. (Inch)	Housing	Adapter Number	Part Number	Aprox. Wt (Lbs)	L (in)	F Max (In)	M (In)
1-7/16	609	H2309-107	**046550**	0.63	2.53	0.52	1.97
1-11/16	610	H2310-111	**046680**	0.80	2.69	0.58	2.17
1-15/16	611	H2311-115	**046551**	0.86	2.97	0.58	2.32
2-3/16	613	H2313-203	**046552**	1.50	3.38	0.64	2.56
2-7/16	615	H2315-207	**046553**	2.55	3.88	0.69	2.87
2-11/16	616	H2316-211	**046682**	3.00	4.16	0.69	3.07
2-15/16	617	H2317-215	**046554**	3.20	4.41	0.72	3.23
3-7/16	620	H2320-307	**046555**	5.30	5.19	0.83	3.82
3-15/16	622	H2322-315	**046556**	5.75	5.72	0.86	4.13
4-3/16	624	H2324-403	**046557**	7.4	6.12	0.92	4.41
4-7/16	626	H2326-407	**046558**	10.7	6.75	0.95	4.76
4-15/16	628	H2328-415	**046559**	12.0	7.09	1.02	5.16
5-3/16	630	H2330-503	**046560**	15.6	7.69	1.08	5.47
5-7/16	632	H2332-507	**046561**	21.7	8.06	1.14	5.79
5-15/16	634	H2334-515	**046562**	22.0	8.66	1.23	8.06
6		H2334-600	**046563**	21.0			
6-15/16	638	H2338-615	**046564**	22.9	9.47	1.30	6.65
7		H2338-700	**046565**	21.6			

FEATURES/BENEFITS PAGE B15-3	SPECIFICATION/HOW TO ORDER PAGE B15-7	NOMENCLATURE PAGE B15-8	SELECTION PAGE B15-13

SELECTION/DIMENSIONS



USAF 200 Direct Mount Pillow Block with TRIPLE-TECT Seal Assembly

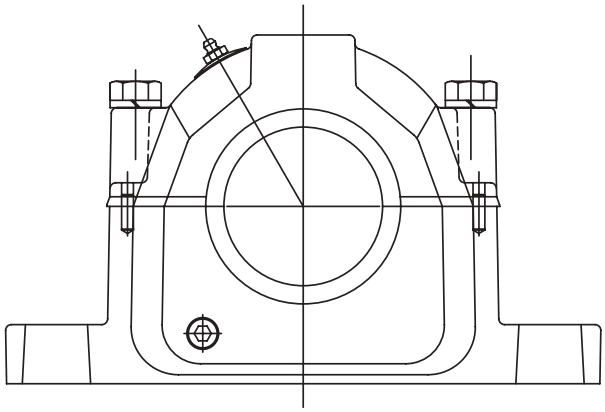

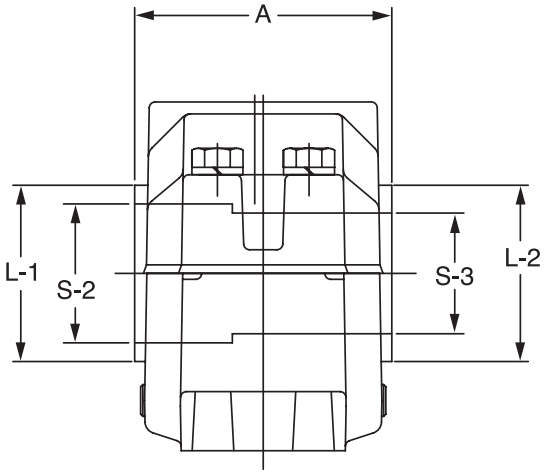

FEATURES/BENEFITS PAGE B15-3	SPECIFICATION/HOW TO ORDER PAGE B15-7	NOMENCLATURE PAGE B15-8	SELECTION PAGE B15-13

DODGE



USAF 200 Direct Mount Pillow Block with TRIPLE-TECT Seal Assembly

Shaft Dia. S-2	Shaft Dia. S-3	Bearing Bore mm.	Complete Pillow Block Part #	Housing Part No.**	Bearing Part No.	Dynamic Capacity (C), lbs.	Max RPM (Grease)	Locknut Part No.
3-7/16	2-13/16	75	P2B215-USAF-307TT 039175	H2S-215-USAF 039682	BRG22215C3 421265	48,000	3,400	AN15 460901
			P4B215-USAF-307TT 039177	H4S-215-USAF 039684	BRG22215C3 421265	48,000	3,400	AN15 460901
3-5/8	3	80	P2B216-USAF-310TT 039179	H2S-216-USAF 039686	BRG22216C3 421266	56,000	3,200	AN16 460902
			P4B216-USAF-310TT 039181	H4S-216-USAF 039688	BRG22216C3 421266	56,000	3,200	AN16 460902
3-15/16	3-3/16	85	P2B217-USAF-315TT 039183	H2S-217-USAF 039690	BRG22217C3 421267	68,000	3,000	AN17 460903
			P4B217-USAF-315TT 039185	H4S-217-USAF 039692	BRG22217C3 421267	68,000	3,000	AN17 460903
4-1/8	3-3/8	90	P2B218-USAF-402TT 039187	H2S-218-USAF 039694	BRG22218C3 421268	78,000	2,600	AN18 460904
			P4B218-USAF-402TT 039189	H4S-218-USAF 039696	BRG22218C3 421268	78,000	2,600	AN18 460904
4-1/2	3-13/16	100	P2B220-USAF-408TT 039191	H2S-220-USAF 039698	BRG22220C3 421269	96,500	2,200	AN20 460905
			P4B220-USAF-408TT 039193	H4S-220-USAF 039700	BRG22220C3 421269	96,500	2,200	AN20 460905
4-7/8	4-3/16	110	P4B222-USAF-414TT 039195	H4S-222-USAF 039702	BRG22222C3 421270	122,000	2,000	AN22 460906
5-5/16	4-9/16	120	P4B224-USAF-505TT 039197	H4S-224-USAF 039704	BRG22224C3 421271	143,000	1,900	AN24 041071
5-7/8	4-15/16	130	P4B226-USAF-514TT 039199	H4S-226-USAF 039706	BRG22226C3 421272	170,000	1,800	AN26 041064
6-1/4	5-5/16	140	P4B228-USAF-604TT 039201	H4S-228-USAF 039708	BRG22228C3 421273	196,000	1,700	AN28 041065
6-5/8	5-3/4	150	P4B230-USAF-610TT 039203	H4S-230-USAF 039710	BRG22230C3 421274	228,000	1,600	AN30 041072
7	6-1/16	160	P4B232-USAF-700TT 039205	H4S-232-USAF 039711	BRG22232C3 421275	260,000	1,500	AN32 041066
7-7/16	6-7/16	170	P4B234-USAF-707TT 039207	H4S-234-USAF 039712	BRG22234C3 421276	308,000	1,300	AN34 041067
7-13/16	6-7/8	180	P4B236-USAF-713TT 039209	H4S-236-USAF 039713	BRG22236C3 421277	308,000	1,300	AN36 041070
8-3/8	7-1/4	190	P4B238-USAF-806TT 039211	H4S-238-USAF 039714	BRG22238C3 421278	270,000	1,200	AN38 041068
8-3/4	7-5/8	200	P4B240-USAF-812TT 039213	H4S-240-USAF 039715	BRG22240C3 421279	300,000	900	AN40 040838
9-9/16	8-5/16	220	P4B244-USAF-909TT 039215	H4S-244-USAF 039716	BRG22244C3 421280	365,000	950	AN44 041069

FEATURES/BENEFITS PAGE B15-3	SPECIFICATION/HOW TO ORDER PAGE B15-7	NOMENCLATURE PAGE B15-8	SELECTION PAGE B15-13

SELECTION/DIMENSIONS



USAF 200 Direct Mount Pillow Block With TRIPLE-TECT Seal Assembly

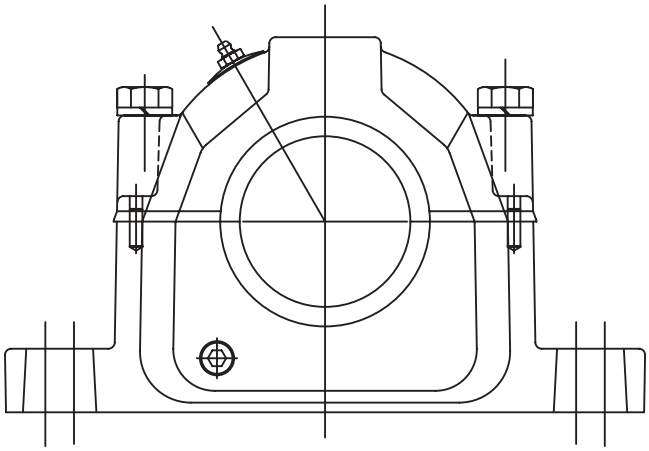

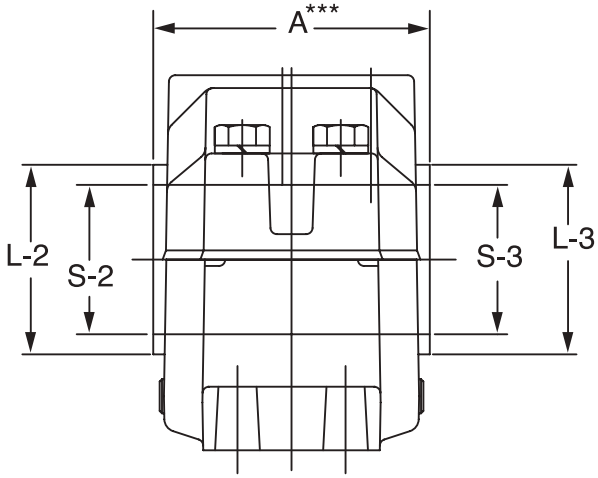

DODGE



USAF 200 Direct Mount Pillow Block With TRIPLE-TECT Seal Assembly

Shaft Dia.		Bearing Bore	Lock washer	TRIPLE-TECT Part No.		TTDN Part No.		# LER Part No.		End Cover
S-2	S-3	mm.	Part No.	S2	S3	S2	S3	S2	S3	Part No.
3-7/16	2-13/16	75	W15 419150	38TT307 046401	24TT213 046400	38TTDN307 039568	24TTDN213 039289	38LER307 *045928	24LER213 *045927	EC24 040705
			W15 419150	38TT307 046401	24TT213 046400	38TTDN307 039568	24TTDN213 039289	38LER307 045928	24LER213 045927	EC24 040705
3-5/8	3	80	W16 419152	38TT310 046402	28TT300 043547	38TTDN310 039291	28TTDN300 039857	38LER310 045931	28LER300 042519	EC28 040706
			W16 419152	38TT310 046402	28TT300 043547	38TTDN310 039291	28TTDN300 039857	38LER310 045931	28LER300 042519	EC28 040706
3-15/16	3-3/16	85	W17 419154	42TT315 046404	32TT303 046403	42TTDN315 039515	32TTDN303 039292	42LER315 042089	32LER303 042088	EC32 057260
			W17 419154	42TT315 046404	32TT303 046403	42TTDN315 039515	32TTDN303 039292	42LER315 042089	32LER303 042088	EC32 057260
4-1/8	3-3/8	90	W18 419156	44TT402 046406	36TT306 046405	---	---	44LER402 *045936	36LER306 *045934	---
			W18 419156	44TT402 046406	36TT306 046405	---	---	44LER402 *045936	36LER306 *045934	---
4-1/2	3-13/16	100	W20 419158	54TT408 043555	50TT313 046407	---	---	54LER408 042527	50LER313 045939	EC50 040709
			W20 419158	54TT408 043555	50TT313 046407	---	---	54LER408 042527	50LER313 045939	EC50 040709
4-7/8	4-3/16	110	W22 419160	56TT414 046408	52TT403 043553	56TTDN414 039297	52TTDN403 039863	56LER414 042098	52LER403 042525	EC52 040710
5-5/16	4-9/16	120	W24 419162	58TT510 046411	54TT409 046409	---	---	58LER505 042248	54LER409 045943	EC54 040711
5-7/8	4-18/16	130	W26 419164	62TT514 046410	56TT415 043556	---	---	62LER514 042085	56LER415 042528	EC56 040712
6-1/4	5-5/16	140	W28 419166	66TT604 046412	58TT505 046411	---	---	66LER604 042249	58LER505 042248	EC58 040713
6-5/8	5-3/4	150	W30 419168	70TT610 046414	62TT512 046413	---	---	70LER610 045951	62LER512 045949	---
7	6-1/16	160	W32 419170	72TT700 043565	64TT601 046415	---	---	72LER700 042538	64LER601 045953	EC64 040681
7-7/16	6-7/16	170	W34 419172	76TT707 046416	68TT607 043562	---	---	76LER707 042049	68LER607 042535	EC68 040682
7-13/16	6-7/8	180	W36 419174	78TT711 046417	72TT614 046418	---	---	78LER711 042221	72LER614 042220	EC72 040683
8-3/8	7-1/4	190	W38 419176	80TT806 046420	74TT704 046419	---	---	*80LER806 042031	*74LER704 042032	EC74 040691
8-3/4	7-5/8	200	W40 419171	82TT812 046423	76TT710 046422	---	---	*82LER812 045956	*76LER710 045955	EC7 040684
9-9/16	8-5/16	220	W44 419178	84TT909 046425	80TT805 046424	---	---	*84LER909 042029	*80LER805 042028	---

 # NOTE: LER seals are made from Aluminum unless otherwise noted by the * symbol.

If an * appears by the part number, the LER seal is manufactured from Steel.

FEATURES/BENEFITS PAGE B15-3	SPECIFICATION/HOW TO ORDER PAGE B15-7	NOMENCLATURE PAGE B15-8	SELECTION PAGE B15-13

SELECTION/DIMENSIONS

USAF 200 Housing Dimensions - Inch

LUBE NOTE:
All Sizes Use A
1/8-27 NPT Hydraulic
Grease Fitting

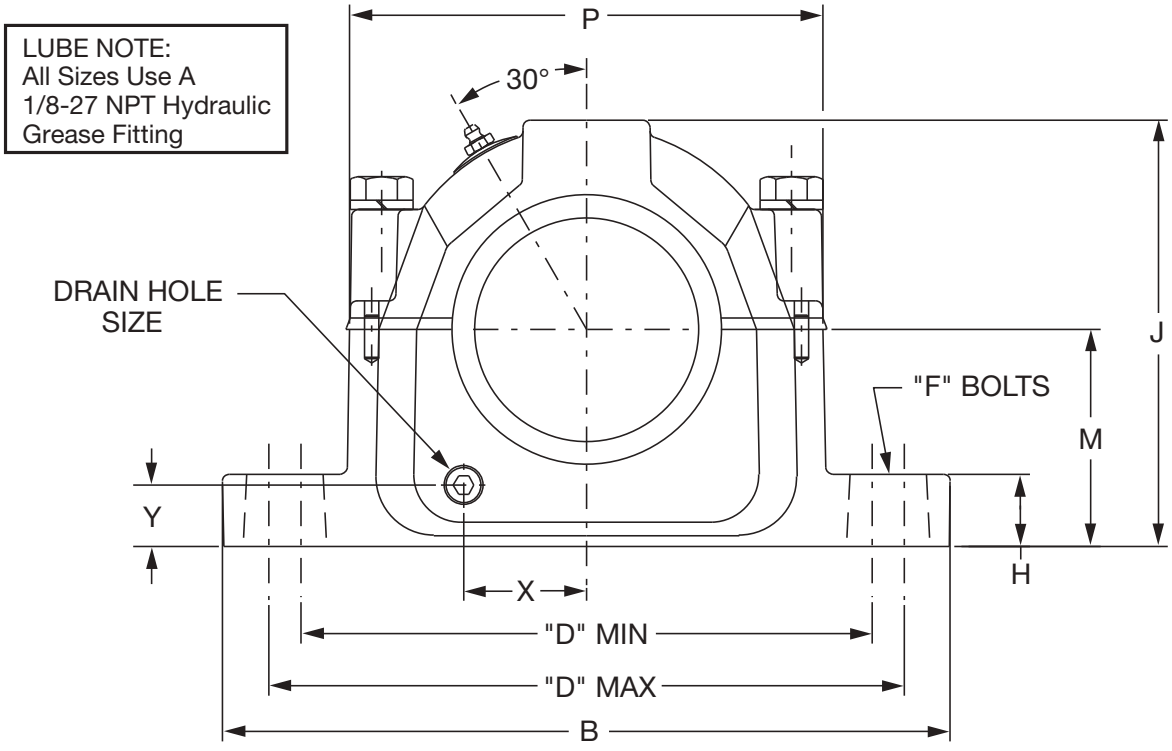

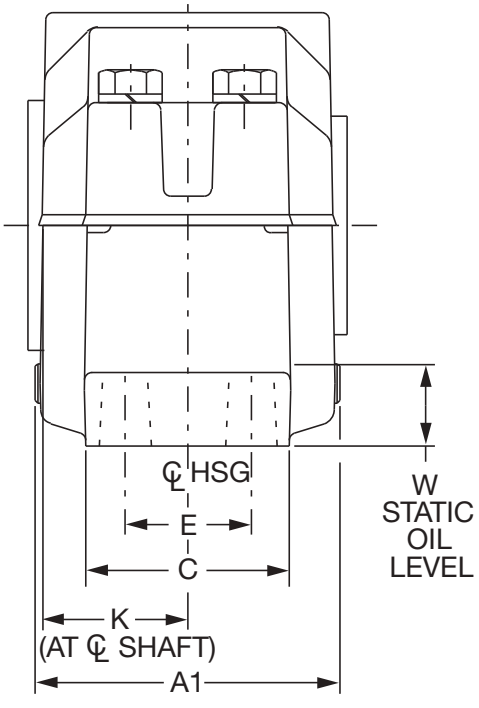

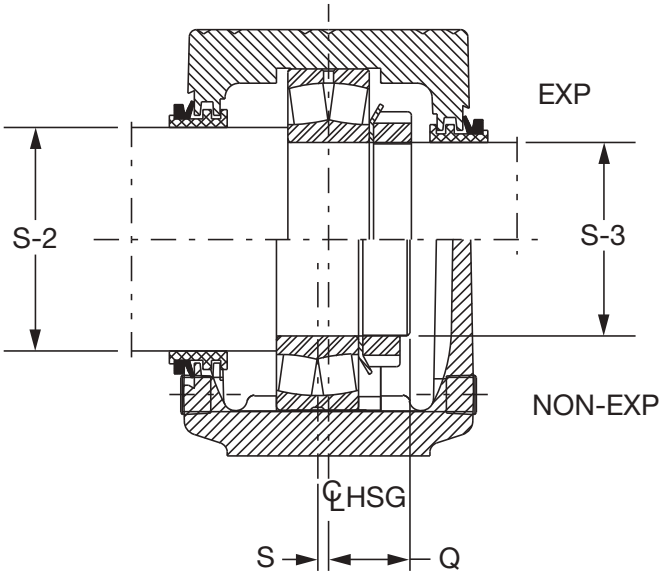



USAF 200 Housing Dimensions - Inch

S-2 Shaft Size	S-3 Shaft Size	Housing	A1 ▲	B	C	D				E	F	
						2-Bolt		4-Bolt			Bolt Dia.	
						Min	Max	Min	Max		H	J
3-7/16	2-13/16	215	5.20	11.13	3.13	8.63	9.68	8.63	9.63	1.88	5/8	1/2
3-5/8	3	216	5.44	12.59	3.50	9.63	11.00	9.68	11.00	2.13	3/4	5/8
3-15/16	3-3/16	217	5.39	12.59	3.50	9.88	11.00	9.88	11.00	2.13	3/4	5/8
4-1/8	3-3/8	218	6.16	13.63	3.88	10.25	11.75	10.38	11.63	2.13	3/4	5/8
4-1/2	3-13/16	220	6.78	15.36	4.34	11.63	13.13	11.63	13.13	2.38	7/8	3/4
4-7/8	4-3/16	222	7.08	16.50	4.75	-	-	12.59	14.50	2.75	-	3/4
5-5/16	4-9/16	224	8.05	16.50	4.72	-	-	13.25	14.50	2.75	-	3/4
5-7/8	4-15/16	226	8.27	18.58	5.13	-	-	14.50	16.00	3.25	-	7/8
6-1/4	5-5/16	228	8.77	19.69	5.88	-	-	15.63	17.38	3.38	-	1
6-5/8	5-3/4	230	9.36	20.88	6.25	-	-	16.75	18.25	3.75	-	1
7	6-1/16	232	9.92	21.66	6.25	-	-	17.38	19.25	3.75	-	1
7-7/16	6-7/16	234	9.91	24.75	6.75	-	-	19.38	21.63	4.25	-	1
7-13/16	6-7/8	236	10.41	26.75	7.13	-	-	20.88	23.63	4.63	-	1
8-3/8	7-1/4	238	10.81	28.00	7.50	-	-	21.63	24.88	4.50	-	1-1/4
8-3/4	7-5/8	240	11.53	28.75	8.00	-	-	22.50	25.00	5.00	-	1-1/4
9-9/16	8-5/16	244	12.30	32.75	8.88	-	-	24.75	27.88	5.25	-	1-1/2

S-2 Shaft Size	S-3 Shaft Size	Housing	H	J	K	M	P	Q ★	S ●	W Static Oil Level	X	Y	Drain Hole Size
3-7/16	2-13/16	215	1.25	6.44	2.31	3.25	7.06	1.39	0.13	1.16	1.78	0.88	1/4-18NPSF
3-5/8	3	216	1.06	6.75	2.42	3.50	7.94	1.44	0.19	1.25	1.97	0.95	1/4-18NPSF
3-15/16	3-3/16	217	1.25	7.38	2.47	3.75	8.19	1.50	0.19	1.38	1.13	1.06	3/8-18NPSF
4-1/8	3-3/8	218	1.44	7.75	2.84	4.00	8.66	1.72	0.19	1.47	1.25	1.13	3/8-18NPSF
4-1/2	3-13/16	220	1.66	8.75	3.16	4.50	9.78	1.92	0.19	1.64	2.63	1.25	3/8-18NPSF
4-7/8	4-3/16	222	1.78	9.41	3.30	4.94	10.59	2.09	0.19	1.80	2.88	1.34	3/8-18NPSF
5-5/16	4-9/16	224	1.50	10.25	3.64	5.25	11.25	2.28	0.19	1.84	3.19	1.38	1/2-14NPSF
5-7/8	4-15/16	226	2.06	11.53	3.75	6.00	12.41	2.47	0.19	1.34	3.31	1.63	1/2-14NPSF
6-1/4	5-5/16	228	2.06	11.81	4.00	6.00	13.25	2.45	0.19	2.03	3.63	1.47	1/2-14NPSF
6-5/8	5-3/4	230	2.38	12.50	4.33	6.31	14.31	2.61	0.19	2.03	3.59	1.33	1/2-14NPSF
7	6-1/16	232	2.34	13.31	4.63	6.69	14.91	2.91	0.19	2.09	4.03	1.33	1/2-14NPSF
7-7/16	6-7/16	234	2.88	14.56	4.63	7.06	16.81	3.13	0.19	2.19	4.16	1.33	1/2-14NPSF
7-13/16	6-7/8	236	3.00	15.13	4.88	7.50	17.19	3.16	0.19	2.42	4.22	1.63	1/2-14NPSF
8-3/8	7-1/4	238	3.13	15.81	5.06	7.88	18.00	3.30	0.19	2.53	4.75	1.61	1/2-14NPSF
8-3/4	7-5/8	240	3.38	16.63	5.44	8.25	19.00	3.50	0.19	2.47	4.91	1.53	1/2-14NPSF
9-9/16	8-5/16	244	3.75	18.88	5.81	9.50	21.25	3.42	0.19	3.25	5.44	2.03	1/2-14NPSF

▲ Housing width with drain plugs

★ Distance shaft should extend beyond housing centerline if pillow block is closed end style

● Non-expansion bearing offset from centerline. For expansion bearing S = 0.

SELECTION/DIMENSIONS

USAF 200 Pillow Block Seals

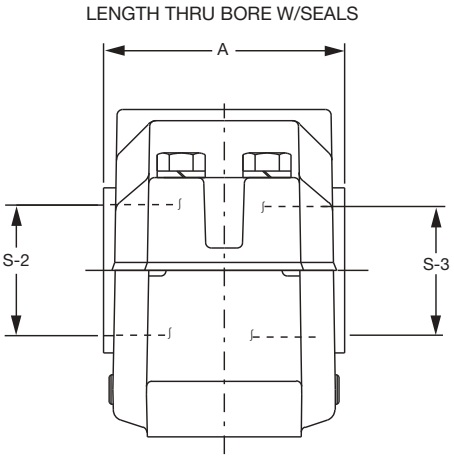

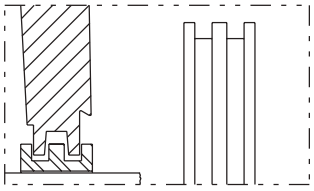

LER SEAL
High speed seal for relatively clean environments

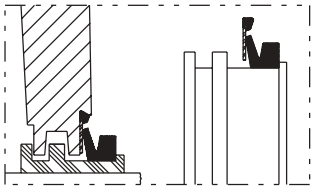

DROP-IN TRIPLE-TECT Seal
DODGE exclusive. popular TRIPLE-TECT features with simplified installation.

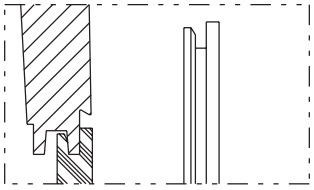

END COVER Seal
Allows use of open shaft housing as closed-end

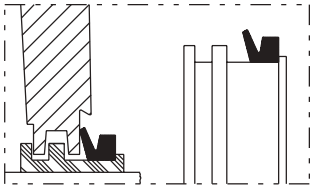

TRIPLE-TECT Seal
General purpose seal for wet or dirty environments

S-2 Shaft Size (Inch)	S-3 Shaft Size (Inch)	Housing	Seal Group		Part Number							A		
					TRIPLE-TECT (TT)		TRIPLE-TECT Drop-in (TTDN)		#Metal Labyrinth (LER)		End Cover Part No.	TT (Inch)	TTDN (Inch)	LER (Inch)
			S-2	S-3	S-2	S-3	S-2	S-3	S-2	S-3	S-3			
3-7/16	2-13/16	215	33	24	**046401**	**046400**	**039568**	**039289**	***045928**	***045927**	**040705**	5.09	5.09	4.47
3-5/8	3	216	38	28	**046402**	**043547**	**039291**	**039857**	**045931**	**042519**	**040706**	5.33	5.33	4.72
3-15/16	3-3/16	217	42	32	**046404**	**046403**	**039515**	**039292**	**042089**	**042088**	**-**	5.44	5.44	4.83
4-1/8	3-3/8	218	44	36	**046406**	**046405**	**-**	**-**	***045936**	***045934**	**-**	6.27	6.27	5.70
4-1/2	3-13/16	220	54	50	**043555**	**046407**	**-**	**-**	**042527**	**045939**	**040709**	6.84	6.84	6.31
4-7/8	4-3/16	222	56	52	**046408**	**043553**	**039297**	**039863**	**042098**	**042525**	**040710**	7.19	7.19	6.59
5-5/16	4-9/16	224	58	54	**046411**	**046409**	**-**	**-**	**042248**	**045943**	**040711**	7.91	7.91	7.31
5-7/8	4-15/16	226	62	56	**046410**	**043556**	**-**	**-**	**042085**	**042528**	**040712**	8.14	8.14	7.50
6-1/4	5-5/16	228	66	58	**046412**	**046411**	**-**	**-**	**042249**	**042248**	**040713**	8.53	8.53	7.88
6-5/8	5-3/4	230	70	62	**046414**	**046413**	**-**	**-**	**045951**	**045949**	**-**	9.41	9.41	8.70
7	6-1/16	232	72	64	**043565**	**046415**	**-**	**-**	**042538**	**045953**	**040681**	9.91	9.91	9.20
7-7/16	6-7/16	234	76	68	**046416**	**043562**	**-**	**-**	**042049**	**042535**	**040682**	9.83	9.83	9.13
7-13/16	6-7/8	236	78	72	**046417**	**046418**	**-**	**-**	**042221**	**042220**	**040683**	10.41	10.41	9.69
8-3/8	7-1/4	238	80	74	**046420**	**046419**	**-**	**-**	***042031**	***042032**	**-**	11.00	11.00	9.98
8-3/4	7-5/8	240	82	76	**046423**	**046422**	**-**	**-**	***045956**	***045955**	**040684**	11.78	11.78	10.72
9-9/16	8-5/16	244	84	80	**046425**	**046424**	**-**	**-**	***042029**	***042028**	**040687**	12.30	12.30	11.41

 # NOTE: LER seals are made from Aluminum unless otherwise noted by the * symbol.

If an * appears by the part number, the LER seal is manufactured from Steel.



USAF 22200 Spherical Roller Bearings

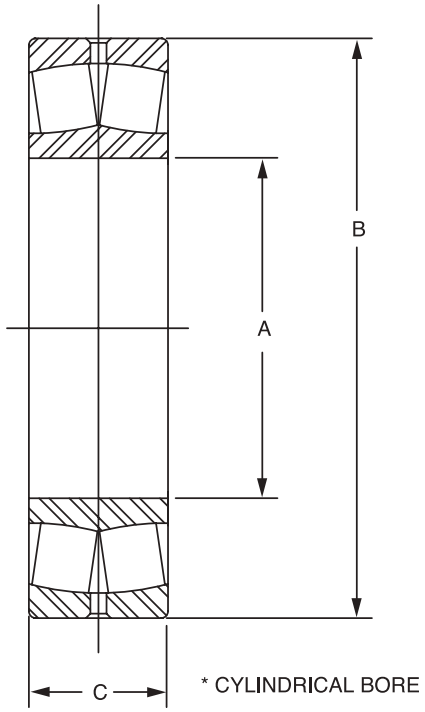

Bearing Bore mm	Housing	Bearing No.	Part No.	Approx. Wt. (lbs)	A Inch (mm)	B Inch (mm)	C Inch (mm)
75	215	22215	**421265**	3.6	2.9528 (75)	5.1181 (130)	1.2205 (31)
80	216	22216	**421266**	4.4	3.1496 (80)	5.5118 (140)	1.2992 (33)
85	217	22217	**421267**	5.5	3.3465 (85)	5.9055 (150)	1.4173 (36)
90	218	22218	**421268**	7.1	3.5433 (90)	6.2992 (160)	1.5748 (40)
100	220	22220	**421269**	10.4	3.9370 (100)	7.0866 (180)	1.8110 (46)
110	222	22222	**421270**	14.8	4.3307 (110)	7.8740 (200)	2.0866 (53)
120	224	22224	**421271**	18.7	4.7244 (120)	8.4646 (215)	2.2835 (58)
130	226	22226	**421272**	23.1	5.1181 (130)	9.0551 (230)	2.5197 (64)
140	228	22228	**421273**	29.8	5.5118 (140)	9.8425 (250)	2.6772 (68)
150	230	22230	**421274**	35.5	5.9055 (150)	10.6299 (270)	2.8740 (73)
160	232	22232	**421275**	47.8	6.2992 (160)	11.4173 (290)	3.1496 (80)
170	234	22234	**421276**	58.0	6.6929 (170)	12.2047 (310)	3.3858 (86)
180	236	22236	**421277**	60.8	7.0866 (180)	12.5984 (320)	3.3858 (86)
190	238	22238	**421278**	82.2	7.4803 (190)	13.3858 (340)	3.6220 (92)
200	240	22240	**421279**	97.9	7.8740 (200)	14.1732 (360)	3.8583 (98)
220	244	22244	**421280**	135.0	8.6614 (220)	15.7480 (400)	4.2520 (108)

FEATURES/BENEFITS PAGE B15-3	SPECIFICATION/HOW TO ORDER PAGE B15-7	NOMENCLATURE PAGE B15-8	SELECTION PAGE B15-13

SELECTION/DIMENSIONS

USAF 200 Series Bearing Shaft Details

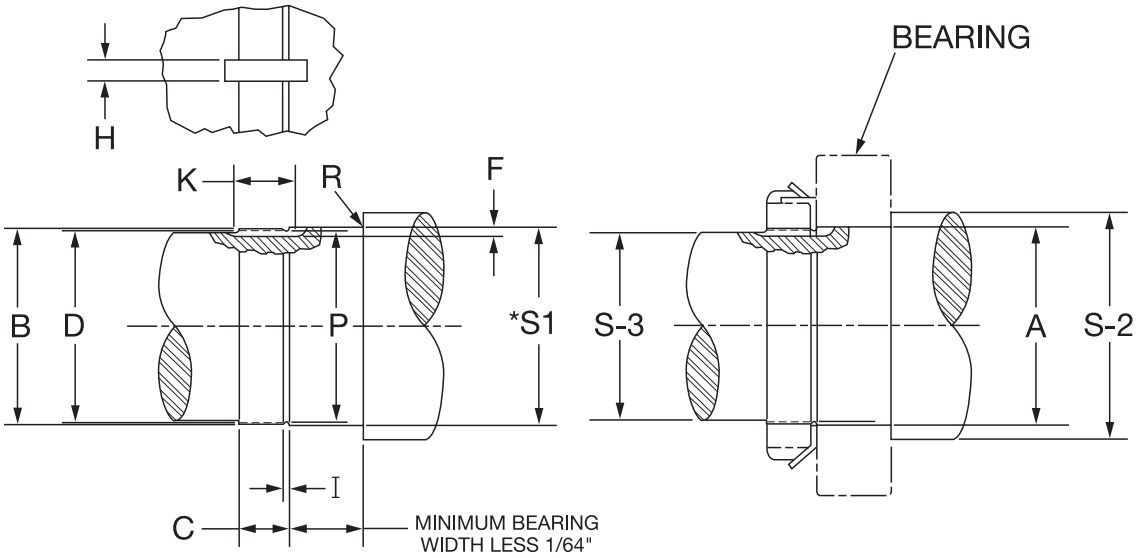

Nominal Bearing Bore Dia. (mm)	Shaft Bearing Seat Diameters (Inch)					
	Normal Load			High Load		
	* S-I		Mean Fit	* S-I		Mean Fit
	Max	Min		Max	Min	
75	2.9540	2.9532	.0011T	2.9543	2.9536	.0014T
80	3.1508	3.1501	.0012T	3.1511	3.1504	.0015T
85	3.3479	3.3470		3.3484	3.3475	
90	3.5447	3.5438		3.5452	3.5443	
95	3.7416	3.7407		3.7421	3.7412	
100	3.9384	3.9375	.0014T	3.9389	3.9380	.0019T
105	4.1353	4.1344		4.1358	4.1349	
110	4.3321	4.3312		4.33Z6	4.3317	
120	4.7258	4.7249		4.7263	4.7254	
125	4.9229	4.9219		4.9235	4.9225	
130	5.1197	5.1187		5.1203	5.1193	
140	5.5134	5.5124		5.5140	5.5130	
150	5.9071	5.9061	.0016T	5.9077	5.9067	.0022T
160	6.3008	6.2998		6.3014	6.3004	
170	6.6945	6.6935		6.6951	6.6941	
180	7.0882	7.0872		7.0888	7.0878	
190	7.4821	7.4809		7.4829	7.4817	.0026T
200	7.8758	7.8746	.0019T	7.8772	7.8760	.0032T
220	8.6632	8.6620		8.6646	8.6634	

Normal Load
P/C = 0.10 TO 0.18

High Load
P/C > 0.18

Where: P= Equivalent dynamic load on the bearing (lbs.)
C= Basic dynamic load rating of bearing (lbs.)

DODGE



USAF 200 Series Bearing Shaft Details

USAF 22200 BEARING SHAFT DIMENSIONS - INCH

Housing	Locknut & Washer Kit Part No.	A Brg Bore	S-2	S-3	Keyway			R Max Radius
					F Depth +1/64 -Ø	H Width +1/64 -Ø	K Full Depth Length	
215	**046756**	2.9528 (75mm)	3-7/16	2-13/16	1/8	5/16	15/16	0.059
216	**046757**	3.1496 (80 mm)	3-5/8	3	1/8	3/8	15/16	0.079
217	**046758**	3.3465 (85 mm)	3-15/16	3-3/16	1/8	3/8	31/32	0.079
218	**046759**	3.5433 (90 mm)	4-1/8	3-3/8	5/32	3/8	1-1/16	0.079
220	**046760**	3.9370 (100 mm)	4-1/2	3-13/16	5/32	3/8	1-3/16	0.079
222	**046761**	4.3307 (110 mm)	4-7/8	4-3/16	3/16	3/8	1-7/32	0.079
224	**046762**	4.7244 (120 mm)	5-5/16	4-9/16	3/16	3/8	1-1/4	0.079
226	**046763**	5.1181 (130 mm)	5-7/8	4-15/16	3/16	1/2	1-5/16	0.098
228	**046764**	5.5118 (140 mm)	6-1/4	5-5/16	3/16	5/8	1-3/8	0.098
230	**046765**	5.9055 (150 mm)	6-5/8	5-3/4	7/32	5/8	1-1/2	0.098
232	**046766**	6.2992 (160 mm)	7	6-1/16	15/64	5/8	1-9/16	0.098
234	**046767**	6.6929 (170 mm)	7-7/16	6-7/16	15/64	3/4	1-19/32	0.118
236	**046768**	7.0866 (180 mm)	7-13/16	6-7/8	15/64	3/4	1-5/8	0.118
238	**046769**	7.4803 (190 mm)	8-3/8	7-1/4	15/64	3/4	1-21/32	0.118
240	**046770**	7.8740 (200 mm)	8-3/4	7-5/8	15/64	7/8	1-23/32	0.118
244	**046771**	8.6614 (220 mm)	9-9/16	8-5/16	3/8	1-1/16	1-9/16	0.118

USAF 22200 BEARING SHAFT DIMENSIONS - INCH

Housing	Threads Per Inch	B Thread Major Dia		D Thread Pitch Dia		C Thread Length +1/64 -0	I Thread Relief +1/64 -0	P † Thread Relief DIA.
		Max	Min	Max	Min			
215	12	2.9330	2.9218	2.8789	2.8735	11/16	5/32	2.7995
216	12	3.1370	3.1258	3.0829	3.0770	11/16	5/32	3.0035
217	12	3.3400	3.3288	3.2859	3.2800	23/32	5/32	3.2065
218	12	3.5270	3.5158	3.4729	3.4655	13/16	5/32	3.3935
220	12	3.9180	3.9068	3.8639	3.8565	7/8	5/32	3.7845
222	12	4.325	4.3138	4.2709	4.2626	29/32	5/32	4.1915
224	12	4.716	4.7048	4.6619	4.6536	15/16	5/32	4.5825
226	12	5.106	5.0948	5.0519	5.0436	1	5/32	4.9725
228	12	5.497	5.4858	5.4429	5.4346	1-1/16	5/32	5.3635
230	12	5.888	5.8768	5.8339	5.8256	1-1/8	5/32	5.7545
232	8	6.284	6.2688	6.2028	6.1937	1-3/16	1/4	6.0993
234	8	6.659	6.6438	6.5778	6.5687	1-7/32	1/4	6.4743
236	8	7.066	7.0508	6.9848	6.9757	1-1/4	1/4	6.8813
238	8	7.472	7.4568	7.3908	7.3817	1-9/32	1/4	7.2873
240	8	7.847	7.8318	7.7658	7.7544	1-11/32	1/4	7.6623
244	8	8.628	8.6128	8.5468	8.5347	1-3/8	1/4	8.4433

† Tolerance ±.005 through 2.6672 dia.; ±.010 for larger sizes

FEATURES/BENEFITS PAGE B15-3	SPECIFICATION/HOW TO ORDER PAGE B15-7	NOMENCLATURE PAGE B15-8	SELECTION PAGE B15-13

SELECTION/DIMENSIONS

USAF 200 Series Locknuts & Washers

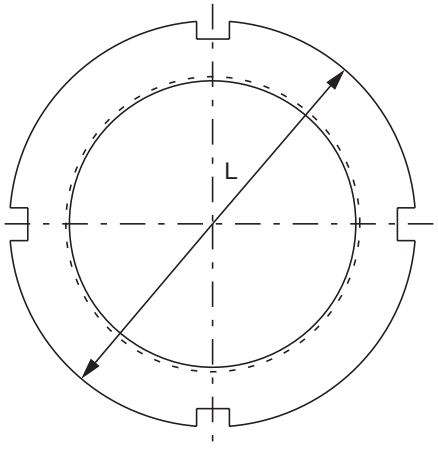

LOCKNUT

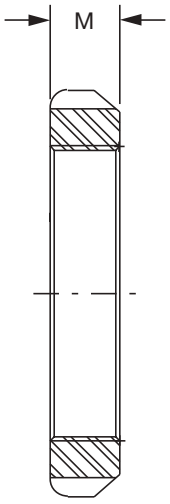

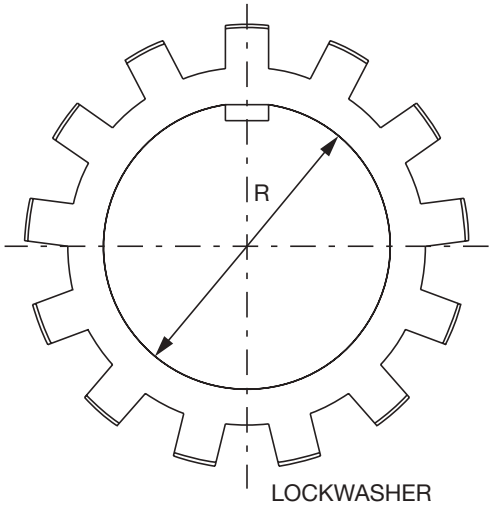

LOCKWASHER

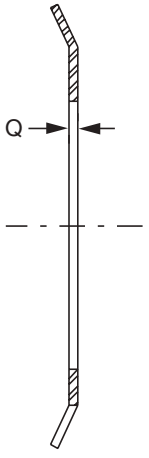



USAF 200 Series Locknuts & Washers

Housing	Locknut		Lockwasher		L	M	R	Q
	Descrip.	Part No.	Descrip.	Part No.	Inch	Inch	Inch	Inch
215	AN15	**460901**	W15	**419150**	3.88	0.59	2.988	0.072
216	AN16	**460902**	W16	**419152**	4.16	0.59	3.192	0.072
217	AN17	**460903**	W17	**419154**	4.41	0.62	3.410	0.072
218	AN18	**460904**	W18	**419156**	4.66	0.69	3.597	0.094
220	AN20	**460905**	W20	**419158**	5.19	0.75	4.003	0.094
222	AN22	**460906**	W22	**419160**	5.72	0.78	4.410	0.125
224	AN24	**041071**	W24	**419162**	6.12	0.81	4.816	0.125
226	AN26	**041064**	W26	**419164**	6.75	0.88	5.209	0.125
228	AN28	**041065**	W28	**419166**	7.09	0.94	5.600	0.125
230	AN30	**041072**	W30	**419168**	7.69	0.97	6.001	0.156
232	AN32	**041066**	W32	**419170**	8.06	1.03	6.407	0.156
234	AN34	**041067**	W34	**419172**	8.66	1.06	6.782	0.156
236	AN36	**041070**	W36	**419174**	9.06	1.09	7.189	0.156
238	AN38	**041068**	W38	**419176**	9.47	1.12	7.595	0.156
240	AN40	**040838**	W40	**419171**	9.84	1.19	8.000	0.156
244	N44	**041069**	W44	**419178**	11.00	1.25	8.719	0.156

SELECTION/DIMENSIONS

DODGE



USAF 300 Direct Mount Pillow Block With TRIPLE-TECT Seal Assembly

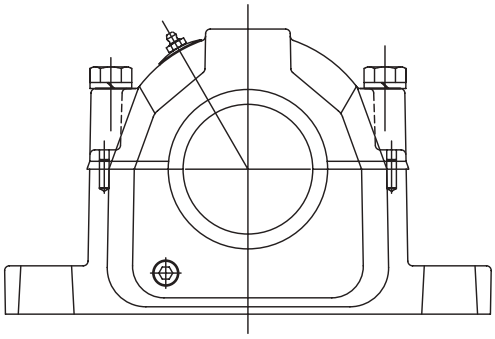

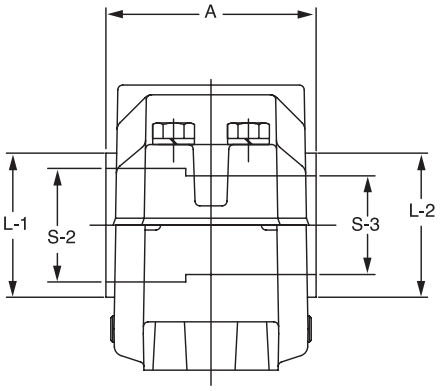

Shaft Dia. S-2	Shaft Dia. S-3	Bearing Bore mm.	Complete Pillow Block Part No.	Housing Part No.**	Bearing Part No.	Dynamic Capacity (C), lbs."	Max Rpm (Grease)	Shaft Locknut Part No.
1-15/16	1-7/16	40	P2B308-USAF-115TT 039355	H2S-308-USAF 039717	BRG22308C3 423124	35,500	4,300	N08 407305
2-1/8	1-11/16	45	P2B309-USAF-202TT 039356	H2S-309-USAF 039719	BRG22309C3 423125	42,500	3,800	N09 419187
2-3/8	1-7/8	50	P2B310-USAF-206TT 035915	H2S-310-USAF 035437	BRG22310C3 423143	51,000	3,400	N10 419188
2-9/16	2-1/16	55	P2B311-USAF-209TT 039357	H2S-311-USAF 039721	BRG22311C3 423126	60,000	3,200	N11 419184
			P4B311-USAF-209TT 039371	H4S-311-USAF 039723	BRG22311C3 423126	60,000	3,200	N11 419184
2-7/8	2-1/4	60	P2B312-USAF-214TT 039358	H2S-312-USAF 039725	BRG22312C3 423127	69,500	2,800	N12 407302
			P4B312-USAF-214TT 039372	H4S-312-USAF 039727	BRG22312C3 423127	69,500	2,800	N12 407302
3-1/6	2-7/16	65	P2B313-USAF-301TT 039359	H2S-313-USAF 039729	BRG22313C3 423128	78,000	2,600	N13 419185
			P4B313-USAF-301TT 039373	H4S-313-USAF 039731	BRG22313C3 423128	78,000	2,600	N13 419185
3-1/4	2-5/8	70	P2B314-USAF-304TT 039360	H2S-314-USAF 039733	BRG22314C3 423129	86,500	2,400	N14 407036
			P4B314-USAF-304TT 039374	H4S-314-USAF 039735	BRG22314C3 423129	86,500	2,400	N14 407036
3-7/16	2-13/16	75	P2B315-USAF-307TT 039361	H2S-315-USAF 039737	BRG22315C3 423130	100,000	2,200	AN15 460901
			P4B315-USAF-307TT 039375	H4S-315-USAF 039739	BRG22315C3 423130	100,000	2,200	AN15 460901
3-5/8	3	80	P2B316-USAF-310TT 035916	H2S-316-USAF 035438	BRG22316C3 423144	112,000	2,200	AN16 460902
			P4B316-USAF-310TT 035917	H4S-316-USAF 035439	BRG22316C3 423144	112,000	2,200	AN16 460902
3-15/16	3-3/16	85	P2B317-USAF-315TT 039362	H2S-317-USAF 039741	BRG22317C3 423131	122,000	2,000	AN17 460903
			P4B317-USAF-315TT 039376	H4S-317-USAF 039743	BRG22317C3 423131	122,000	2,000	AN17 460903

FEATURES/BENEFITS PAGE B15-3 | SPECIFICATION/HOW TO ORDER PAGE B15-7 | NOMENCLATURE PAGE B15-8 | SELECTION PAGE B15-13

DODGE



USAF 300 Direct Mount Pillow Block With TRIPLE-TECT Seal Assembly

Shaft Dia.		Bearing Bore mm.	Lockwasher Part No.	TRIPLE-TECT Part No.		TTDN Part No.		# LER Part No.		End Cover Part No.
S-2	S-3			S-2	S-3	S2	S3	S-2	S-3	
1-15/16	1-7/16	40	W08 419151	12TT115 043540	08TT107 043578	---	---	12LER115 042512	08LER107 042193	EC-08 040700
2-1/8	1-11/16	45	W09 419180	14TT202 046464	10TT111 043579	---	---	14LER202 *046472	10LER111 *042199	EC-10 040701
2-3/8	1-7/8	50	W10 419181	18TT206 046166	12TT114 046167	---	---	18LER206 046175	12LER114 046176	EC-12 040702
2-9/16	2-1/16	55	W11 419182	22TT209 046466	14TT201 046463	22TTDN209 035748	14TTDN201 035745	22LER209 *046474	14LER201 *046471	EC-14 040703
			W11 419182	22TT209 046466	14TT201 046463	22TTDN209 035748	14TTDN201 035745	22LER209 *046474	14LER201 *046471	EC-14 040703
2-7/8	2-1/4	60	W12 419008	26TT214 046468	14TT204 046465	26TTDN214 035750	14TTDN204 035747	26LER214 046476	14LER204 046473	EC-14 040703
			W12 419008	26TT214 046468	14TT204 046465	26TTDN214 035750	14TTDN204 035747	26LER214 046476	14LER204 046473	EC-14 040703
3-1/6	2-7/16	65	W13 419183	28TT301 046469	22TT207 046168	28TTDN301 035751	22TTDN207 035744	28LER301 *046477	22LER207 *046177	---
			W13 419183	28TT301 046469	22TT207 046168	28TTDN301 035751	22TTDN207 035744	28LER301 *046477	22LER207 *046177	---
3-1/4	2-5/8	70	W14 419153	32TT304 046470	22TT210 046467	32TTDN304 035752	22TTDN210 035749	32LER304 046478	22LER210 046475	---
			W14 419153	32TT304 046470	22TT210 046467	32TTDN304 035752	22TTDN210 035749	32LER304 046478	22LER210 046475	---
3-7/16	2-13/16	75	W15 419150	38TT307 046401	24TT213 046400	38TTDN307 039568	24TTDN213 039289	38LER307 *045928	24LER213 *045927	EC24 040705
			W15 419150	38TT307 046401	24TT213 046400	38TTDN307 039568	24TTDN213 039289	38LER307 *045928	24LER213 *045927	EC24 040705
3-5/8	3	80	W16 419152	38TT310 046402	28TT300 042547	38TTDN310 039291	28TTDN300 039857	38LER310 045931	28LER300 042519	EC28 040706
			W16 419152	38TT310 046402	28TT300 042547	38TTDN310 039291	28TTDN300 039857	38LER310 045931	28LER300 042519	EC28 040706
3-15/16	3-3/16	85	W17 419154	42TT315 046404	32TT303 046403	42TTDN315 039515	32TTDN303 039292	42LER315 042089	32LER303 042088	---
			W17 419154	42TT315 046404	32TT303 046403	42TTDN315 039515	32TTDN303 039292	42LER315 042089	32LER303 042088	---

 # NOTE: LER seals are made from Aluminum unless otherwise noted by the * symbol.

If an * appears by the part number, the LER seal is manufactured from Steel.

FEATURES/BENEFITS PAGE B15-3	SPECIFICATION/HOW TO ORDER PAGE B15-7	NOMENCLATURE PAGE B15-8	SELECTION PAGE B15-13

SELECTION/DIMENSIONS



USAF 300 Direct Mount Pillow Block With TRIPLE-TECT Seal Assembly

Shaft Dia.		Bearing Bore mm.	Complete Pillow Block Part No.	Housing Part No.**	Bearing Part No.	Dynamic Capacity (C), lbs.	Max Rpm (Grease)	Locknut Part No.
S-2	S-3							
4-1/2	3-13/16	100	P4B320-USAF-408TT 039377	H4S-320-USAF 039745	BRG22320C3 423132	146,000	1,700	AN204 060905
4-7/8	4-3/16	110	P4B322-USAF-414TT 039378	H4S-322-USAF 039747	BRG22322C3 423133	180,000	1,500	AN224 060906
5-5/16	4-9/16	120	P4B324-USAF-505TT 039380	H4S-324-USAF 039749	BRG22324C3 423134	204,000	1,400	AN24 041071
5-7/8	4-15/16	130	P4B326-USAF-514TT 039381	H4S-326-USAF 039750	BRG22326C3 423135	236,000	1,300	AN26 041064
6-1/4	5-5/16	140	P4B328-USAF-604TT 039382	H4S-328-USAF 039751	BRG22328C3 423136	275,000	1,200	AN28 041065
6-5/8	5-3/4	150	P4B330-USAF-610TT 039383	H4S-330-USAF 039752	BRG22330C3 423137	310,000	1,100	AN30 041072
7	6-1/16	160	P4B332-USAF-700TT 039384	H4S-332-USAF 039753	BRG22332C3 423138	325,000	1,000	AN32 041066
7-7/16	6-7/16	170	P4B334-USAF-707TT 039385	H4S-334-USAF 039754	BRG22334C3 423139	360,000	950	AN34 041067
8-3/8	7-1/4	190	P4B338-USAF-806TT 039386	H4S-338-USAF 039755	BRG22338C3 423140	415,000	850	AN38 041068



USAF 300 Direct Mount Pillow Block With TRIPLE-TECT Seal Assembly

Shaft Dia.		Bearing Bore	Lock-washer	TRIPLE-TECT Part No.		TTDN Part No.		# LER Part No.		End Cover
S2	S3	mm.	Part No.	S-2	S-3	S-2	S-3	S2	S3	Part No.
4-1/2	3-13/16	100	W20 419158	54TT408 043555	50TT313 046407	---	---	54LER408 042527	50LER313 045939	EC50 040709
4-7/8	4-3/16	110	W22 419160	56TT414 046408	52TT403 043553	56TTDN414 039297	52TTDN403 039863	56LER414 042098	52LER403 042525	EC52 040710
5-5/16	4-9/16	120	W24 419162	58TT510 046411	54TT409 046409	---	---	58LER505 042248	54LER409 045943	EC54 040711
5-7/8	4-15/16	130	W26 419164	62TT514 046410	56TT415 043556	---	---	62LER514 042085	56LER415 042528	EC56 040712
6-1/4	5-5/16	140	W28 419166	66TT604 046412	58TT505 046411	---	---	66LER604 042249	58LER505 042248	EC58 040713
6-5/8	5-3/4	150	W30 419168	70TT610 046414	62TT512 046413	---	---	70LER610 045951	62LER512 045949	---
7	6-1/16	160	W32 419170	72TT700 043565	64TT601 046415	---	---	72LER700 042538	64LER601 045953	EC64 040681
7-7/16	6-7/16	170	W34 419172	76TT707 046416	68TT607 043562	---	---	76LER707 042049	68LER607 042535	EC68 040682
8-3/8	7-1/4	190	W38 419176	80TT806 046420	74TT704 046419	---	---	80LER806 *042031	74LER704 *042032	EC74 040691

 # NOTE: LER seals are made from Aluminum unless otherwise noted by the * symbol.

If an * appears by the part number, the LER seal is manufactured from Steel.

SELECTION/DIMENSIONS

USAF 300 Housing Dimensions - Inch

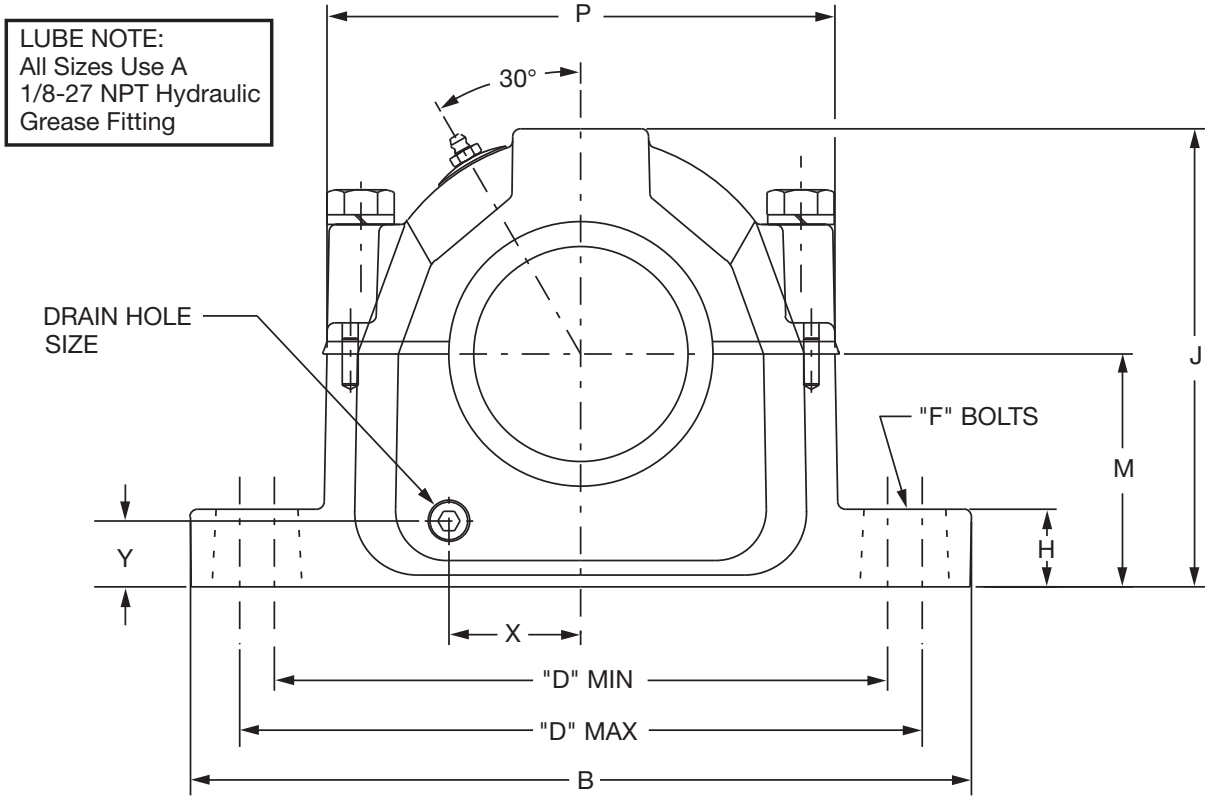

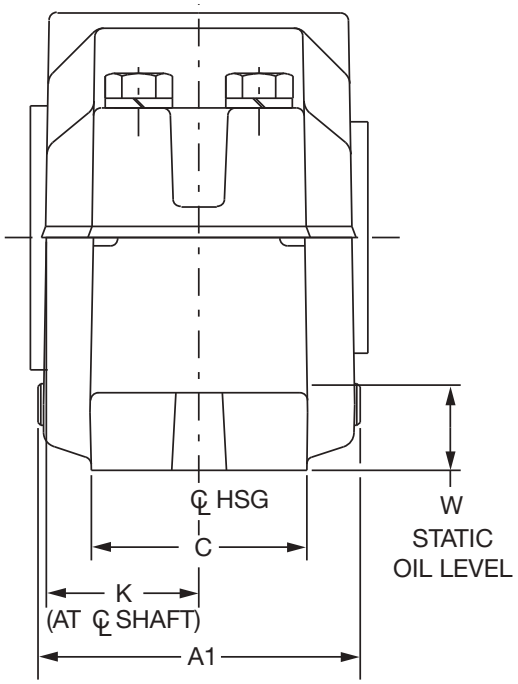



USAF 300 Housing Dimensions - Inch

S-2 Shaft Size	S-3 Shaft Size	Housing	A1 ▲	B	C	D				E	F	
						2-Bolt		4-Bolt			Bolt Dia.	
						Min	Max	Min	Max		2-Bolt	4-Bolt
1-15/16	1-7/16	308	4.06	8.25	2.34	6.50	7.00	-	-	-	1/2	-
2-1/8	1-11/16	309	4.25	9.63	2.75	7.38	8.25	-	-	-	5/8	-
2-3/8	1-7/8	310	4.70	10.63	2.75	7.75	9.00	-	-	-	5/8	-
2-9/16	2-1/16	311	4.64	11.00	3.13	8.13	9.50	8.13	9.50	1.88	5/8	1/2
2-7/8	2-1/4	312	5.20	11.13	3.13	8.63	9.63	8.63	9.63	1.88	5/8	1/2
3-1/16	2-7/16	313	5.44	12.59	3.50	9.63	11.00	9.63	11.00	2.13	3/4	5/8
3-1/4	2-5/8	314	5.39	12.59	3.50	9.88	11.00	9.88	11.00	2.13	3/4	5/8
3-7/16	2-13/16	315	6.16	13.63	3.88	10.25	11.75	10.38	11.63	2.13	3/4	5/8
3-5/8	3	316	6.38	14.17	3.88	10.88	12.38	10.63	12.50	2.13	3/4	5/8
3-15/16	3-3/16	317	6.78	15.36	4.34	11.63	13.13	11.63	13.13	2.38	7/8	3/4
4-1/2	3-13/16	320	8.05	16.50	4.72	-	-	13.25	14.50	2.75	-	3/4
4-7/8	4-3/16	322	8.27	18.38	5.13	-	-	14.50	16.00	3.25	-	7/8
5-5/16	4-9/16	324	9.36	20.88	6.25	-	-	16.75	18.25	3.75	-	1
5-7/8	4-15/16	326	9.92	21.66	6.25	-	-	17.38	19.25	3.75	-	1
6-1/4	5-5/16	328	9.91	24.75	6.75	-	-	19.38	21.63	4.25	-	1
6-5/8	5-3/4	330	10.41	26.75	7.13	-	-	20.88	23.63	4.63	-	1
7	6-1/16	332	10.81	28.00	7.50	-	-	21.63	24.38	4.50	-	1-1/4
7-7/16	6-7/16	334	11.53	28.75	8.00	-	-	22.50	25.00	5.00	-	1-1/4
8-3/8	7-1/4	338	12.30	32.75	8.88	-	-	24.75	27.88	5.25	-	1-1/2

S-2 Shaft Size	S-3 Shaft Size	Housing	H	J	K	M	P	Q ★	S ●	W Static Oil Level	X	Y	Drain Hole Size
1-15/16	1-7/16	308	1.03	4.58	1.88	2.50	5.13	1.17	0.13	1.19	1.25	0.81	1/8-27NPSI
2-1/8	1-11/16	309	1.03	5.25	1.97	2.75	5.78	1.23	0.13	1.28	1.94	0.83	1/8-27NPSI
2-3/8	1-7/8	310	1.41	5.72	2.20	3.00	6.13	1.38	0.22	1.38	1.53	0.95	1/8-27NPSI
2-9/16	2-1/16	311	1.03	5.94	2.16	3.00	6.50	1.42	0.13	1.44	1.66	0.78	1/8-27NPSI
2-7/8	2-1/4	312	1.25	6.44	2.31	3.25	7.06	1.52	0.13	1.31	1.78	0.88	1/4-18NPSF
3-1/16	2-7/16	313	1.06	6.75	2.42	3.50	7.94	1.58	0.19	1.41	1.97	0.95	1/4-18NPSF
3-1/4	2-5/8	314	1.25	7.38	2.47	3.75	8.19	1.64	0.19	1.47	1.13	1.06	3/8-18NPSF
3-7/16	2-13/16	315	1.44	7.75	2.84	4.00	8.66	1.77	0.19	1.59	1.25	1.13	3/8-18NPSF
3-5/8	3	316	1.22	8.25	2.95	4.25	9.03	1.83	0.19	1.69	2.38	1.17	3/8-18NPSF
3-15/16	3-3/16	317	1.66	8.75	3.16	4.50	9.78	1.91	0.19	1.75	2.63	1.25	3/8-18NPSF
4-1/2	3-13/16	320	1.50	10.25	3.64	5.25	11.25	2.30	0.19	2.03	3.19	1.38	1/2-14NPSF
4-7/8	4-3/16	322	2.06	11.53	3.75	6.00	12.41	2.50	0.19	2.41	3.31	1.63	1/2-14NPSF
5-5/16	4-9/16	324	2.38	12.50	4.33	6.31	14.31	2.64	0.19	2.38	3.59	1.33	1/2-14NPSF
5-7/8	4-15/16	326	2.34	13.31	4.63	6.69	14.91	2.84	0.19	2.44	4.03	1.33	1/2-14NPSF
6-1/4	5-5/16	328	2.88	14.56	4.63	7.06	16.81	3.09	0.19	2.56	4.16	1.33	1/2-14NPSF
6-5/8	5-3/4	330	3.00	15.13	4.88	7.50	17.19	3.27	0.19	2.63	4.22	1.63	1/2-14NPSF
7	6-1/16	332	3.13	15.81	5.06	7.88	18.00	3.44	0.19	2.69	4.75	1.61	1/2-14NPSF
7-7/16	6-7/16	334	3.38	16.63	5.44	8.25	19.00	3.59	0.19	2.75	4.91	1.58	1/2-14NPSF
8-3/8	7-1/4	338	3.75	18.88	5.81	9.50	21.25	3.89	0.19	3.38	5.44	2.03	1/2-14NPSF

▲ Housing width with drain plugs. Length thru bore page B15-118.

★ Distance shaft should extend beyond housing centerline if pillow block is closed end style

● Non-expansion bearing offset from centerline. For expansion bearing S = 0.

SELECTION/DIMENSIONS

USAF 300 Pillow Block Seals

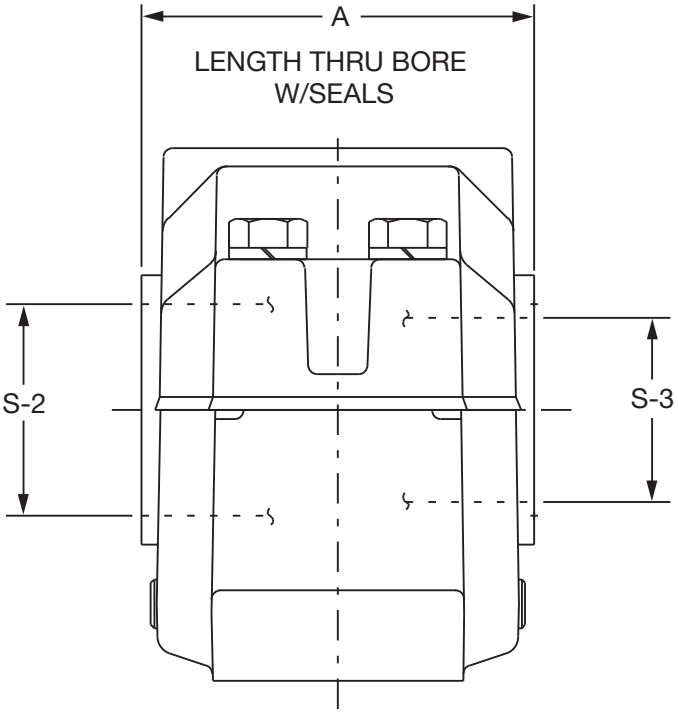

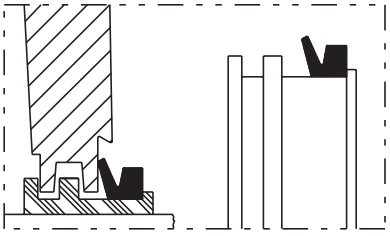

TRIPLE-TECT Seal
General purpose seal for wet or dirty environments

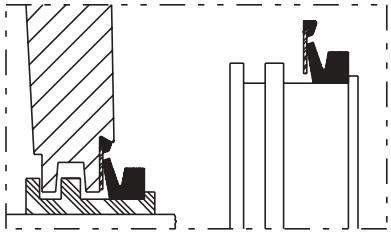

DROP-IN TRIPLE-TECT Seal
DODGE exclusive. Popular TRIPLE-TECT features simplify installation.

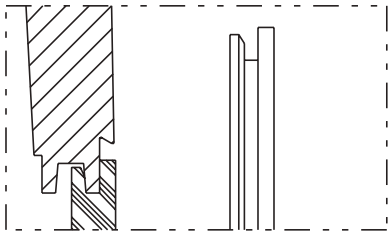

END COVER Seal
Allows use of open shaft housing as closed-end

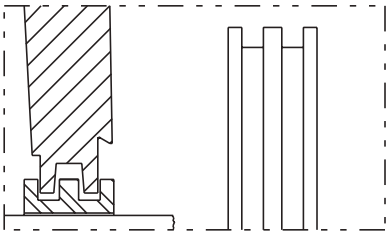

LER Seal
High speed seal for relatively clean environments



USAF 300 Pillow Block Seals

S-2 Shaft Size (Inch)	S-3 Shaft Size (Inch)	Housing	Seal Group		Part Number							A		
					TRIPLE-TECT (TT)		TRIPLE-TECT Drop-In (TTDN)		# Metal Labyrinth (LER)		End Cover	TT (Inch)	TTDN (Inch)	LER (Inch)
			S-2	S-3	S-2	S-3	S-2	S-3	S-2	S-3	S-3			
1-15/16	1-7/16	308	12	8	**043540**	**043578**	-	-	**042512**	**042193**	**040700**	4.19	4.19	3.64
2-1/8	1-11/16	309	14	10	**046464**	**043579**	-	-	***046472**	***042199**	**040701**	4.36	4.36	3.83
2-3/8	1-7/8	310	18	12	**046166**	**046167**	-	-	**046175**	**046176**	**040702**	4.81	4.81	4.28
2-9/16	2-1/16	311	22	14	**046466**	**046463**	**035748**	**035745**	***046474**	***046471**	**040703**	4.80	4.80	4.19
2-7/8	2-1/4	312	26	14	**046468**	**046465**	**035750**	**035747**	**046476**	**046473**	**040703**	5.02	5.02	4.42
3-1/16	2-7/16	313	28	22	**046469**	**046168**	**035751**	**035744**	***046477**	***046177**	-	5.34	5.34	4.69
3-1/4	2-5/8	314	32	22	**046470**	**046467**	**035752**	**035749**	**046478**	**046475**	-	5.44	5.44	4.80
3-7/16	2-13/16	315	38	24	**046401**	**046400**	**039290**	**039289**	***045928**	***045927**	**040705**	6.20	6.20	5.59
3-5/8	3	316	38	28	**046402**	**043547**	**039291**	**039857**	**045931**	**042519**	**040706**	6.42	6.42	5.81
3-15/16	3-3/16	317	42	32	**046404**	**046403**	**039515**	**039292**	**042089**	**042088**	-	6.39	6.39	6.17
4-1/2	3-13/16	320	54	50	**043555**	**046407**	-	-	**042527**	**045939**	**040709**	7.86	7.86	7.33
4-7/8	4-3/16	322	56	52	**046408**	**043553**	**039297**	**039863**	**042098**	**042525**	**040710**	8.09	8.09	7.50
5-5/16	4-9/16	324	58	54	**046411**	**046409**	-	-	**042248**	**045943**	**040711**	9.28	9.28	8.69
5-7/8	4-15/16	326	62	56	**046410**	**043556**	-	-	**042085**	**042528**	**040712**	9.84	9.84	9.20
6-1/4	5-5/16	328	66	58	**046412**	**046411**	-	-	**042249**	**042248**	**040713**	9.78	9.78	9.13
6-5/8	5-3/4	330	70	62	**046414**	**046413**	-	-	**045951**	**045949**	-	10.39	10.39	9.70
7	6-1/16	332	72	64	**043565**	**046415**	-	-	***042538**	***045953**	**040681**	10.69	10.69	9.98
7-7/16	6-7/16	334	76	68	**046416**	**043562**	-	-	**042049**	**042535**	**040682**	11.44	11.44	10.73
8-3/8	7-1/4	338	80	74	**046420**	**046419**	-	-	**042031**	**042032**	-	12.44	12.44	11.70

 # NOTE: LER seals are made from Aluminum unless otherwise noted by the * symbol.

If an * appears by the part number, the LER seal is manufactured from Steel.

SELECTION/DIMENSIONS

USAF 22300 Spherical Roller Bearings

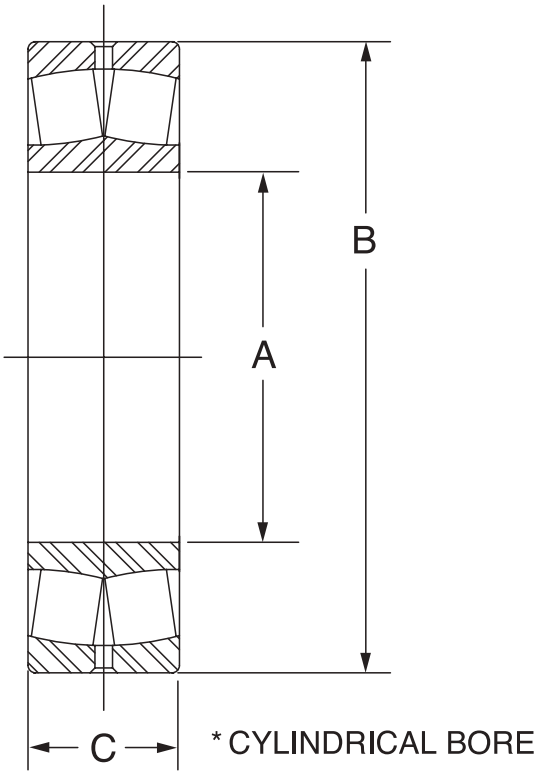



USAF 22300 Spherical Roller Bearings

Shaft Size Under Brg. mm	Housing	Bearing No	Part No	Approx. Wt (Lbs.)	A Inch	B Inch	C Inch
40	308	22308	**423124**	2.3	1.5748 (40)	3.5433 (90)	1.2992 (33)
45	309	22309	**423125**	3.0	1.7717 (45)	3.9370 (100)	1.4173 (36)
50	310	22310	**423143**	3.9	1.9685 (50)	4.3307 (110)	1.5758 (40)
55	311	22311	**423126**	5.1	2.1654 (55)	4.7244 (120)	1.6929 (43)
60	312	22312	**423127**	6.5	2.3622 (60)	5.1181 (130)	1.8110 (46)
65	313	22313	**423128**	7.8	2.5591 (65)	5.5118 (140)	1.8898 (48)
70	314	22314	**423129**	9.3	2.7559 (70)	5.9055 (150)	2.0079 (51)
75	315	22315	**423130**	11.5	2.9528 (75)	6.2992 (160)	2.1654 (55)
80	316	22316	**423144**	13.1	3.1496 (80)	6.6929 (170)	2.2835 (58)
85	317	22317	**423131**	15.7	3.3465 (85)	7.0866 (180)	2.3622 (60)
100	320	22320	**423132**	28.0	3.9370 (100)	8.4646 (215)	2.8740 (73)
110	322	22322	**423133**	38.8	4.3307 (110)	9.4488 (240)	3.1496 (80)
120	324	22324	**423134**	48.3	4.7244 (120)	10.2362 (260)	3.3858 (86)
130	326	22326	**423135**	59.7	5.1181 (130)	11.0236 (280)	3.6614 (93)
140	328	22328	**423136**	75.4	5.5118 (140)	11.8110 (300)	4.0157 (102)
150	330	2230	**423137**	90.4	5.9055 (150)	12.5984 (320)	4.2520 (108)
160	332	22332	**423138**	113.0	6.2992 (160)	13.3858 (350)	4.4882 (114)
170	334	22334	**423139**	132.0	6.6929 (170)	14.1732 (360)	4.7244 (120)
190	338	22338	**423140**	179.0	7.4803 (190)	15.7480 (400)	5.1969 (132)

FEATURES/BENEFITS PAGE B15-3	SPECIFICATION/HOW TO ORDER PAGE B15-7	NOMENCLATURE PAGE B15-8	SELECTION PAGE B15-13

SELECTION/DIMENSIONS



USAF 300 Series Bearing Shaft Details

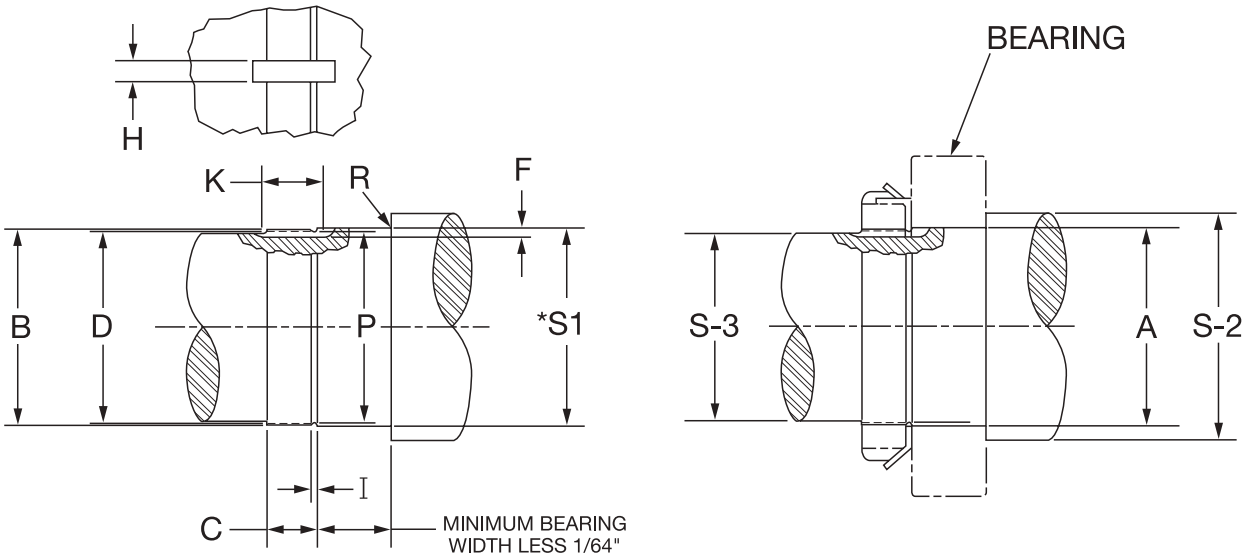

Nominal Bearing Bore Dia. (mm)	Shaft Bearing Seat Diameters (Inch)					
	Normal Load			High Load		
	* S-1		Mean Fit	* S-1		Mean Fit
	Max	Min		Max	Min	
40	1.5758	1.5752	.0009T	1.5761	1.5655	.0012T
45	1.7727	1.7721		1.7730	1.7724	
50	1.9697	1.9689	.0011T	1.9700	1.9693	.0014T
55	2.1666	2.1658		2.1669	2.1662	
60	2.3634	2.3626		2.3637	2.3630	
65	2.5603	2.5595		2.5606	2.5599	
70	2.7571	2.7563		2.7574	2.7567	
75	2.9540	2.9532		2.9543	2.9536	
80	3.1508	3.1501	.0012T	3.1511	3.1504	.0015T
85	3.3479	3.3470	.0014T	3.3484	3.3475	.0019T
100	3.9384	3.9375		3.9389	3.9380	
110	4.3321	4.3312		4.3326	4.3317	
120	4.7258	4.7249		47263	4.7254	
130	5.1197	5.1187	.0016T	5.1203	5.1193	.0022T
140	5.5134	5.5124		5.5140	5.5130	
150	5.9071	5.9061		5.9077	5.9067	
160	6.3008	6.2998		6.3014	6.3004	
170	6.6945	6.6935		6.6951	6.6941	
190	7.4821	7.4809	.0019T	7.4829	7.4817	.0026T

Normal Load
P/C = 0.10 TO 0.18

High Load
P/C > 0.18

Where P = Equivalent dynamic load on the bearing (lbs.)
C = Basic dynamic load rating of bearing (lbs.)



USAF 300 Series Bearing Shaft Details

Housing	Locknut & Washer Kit Part No.	A Brg Bore	S-2	S-3	Keyway			
					F Depth +1/64 - 0	H Width +1/64 - 0	K Full Depth Length	R Max Radius
308	**046751**	1.5748 (40 mm)	1-15/16	1-7/16	3/32	5/16	21/32	0.059
309	**046752**	1.7717 (45 mm)	2-1/8	1-11/16	3/32	5/16	11/16	0.059
310	**046753**	1.9685 (50 mm)	2-3/8	1-7/8	3/32	5/16	3/4	0.079
311	**046754**	2.1654 (55 mm)	2-9/16	2-1/16	1/8	5/16	3/4	0.079
312	**046772**	2.3622 (60 mm)	2-7/8	2-1/4	1/8	5/16	25/32	0.079
313	**046755**	2.5591 (65 mm)	3-1/16	2-7/16	1/8	5/16	13/16	0.079
314	**046773**	2.7559 (70 mm)	3-1/4	2-5/8	1/8	5/16	29/32	0.079
315	**046756**	2.9528 (75 mm)	3-7/16	2-13/16	1/8	5/16	15/16	0.079
316	**046757**	3.1496 (80 mm)	3-5/8	3	1/8	3/8	15/16	0.079
317	**046758**	3.3465 (85 mm)	3-15/16	3-3/16	1/8	3/8	31/32	0.098
320	**046760**	3.9370 (100 mm)	4-1/2	3-13/16	5/32	3/8	1-3/16	0.098
322	**046761**	4.3307 (110 mm)	4-7/8	4-3/16	3/16	3/8	1-7/32	0.098
324	**046762**	4.7244 (120 mm)	5-5/16	4-9/16	3/16	3/8	1-1/4	0.098
326	**046763**	5.1181 (130 mm)	5-7/8	4-15/16	3/16	1/2	1-5/16	0.118
328	**046764**	5.5118 (140 mm)	6-1/4	5-5/16	3/16	5/8	1-3/8	0.118
330	**046765**	5.9055 (150 mm)	6-5/8	5-3/4	7/32	5/8	1-1/2	0.118
332	**046766**	6.2992 (160 mm)	7	6-1/16	15/64	5/8	1-9/16	0.118
334	**046767**	6.6929 (170 mm)	7-7/16	6-7/16	15/64	3/4	1-19/32	0.118
338	**046769**	7.4803 (190 mm)	8-3/8	7-1/4	15/64	3/4	1-21/32	0.157

Housing	Threads Per Inch	B Thread Major Dia		D Thread Pitch Dia		C Thread Length +1/64 -0	I Thread Relief +1/64 -0	P† Thread Relief Dia.
		Max	Min	Max	Min			
308	18	1.5630	1.5548	1.5269	1.5224	17/32	3/32	1.4792
309	18	1.7670	1.7588	1.7309	1.7204	17/32	1/8	1.6832
310	18	1.9670	1.9588	1.9309	1.9264	19/32	1/8	1.8832
311	18	2.1570	2.1488	2.1209	2.1159	19/32	1/8	2.0732
312	18	2.3600	2.3518	2.3239	2.3188	5/8	1/8	2.2762
313	18	2.5480	2.5398	2.5119	2.5068	21/32	1/8	2.4642
314	18	2.7510	2.7428	2.7149	2.7098	21/32	1/8	2.6672
315	12	2.9330	2.9218	2.8789	2.8735	11/16	5/32	2.7995
316	12	3.1370	3.1258	3.0829	3.0770	11/16	5/32	3.0035
317	12	3.3400	3.3288	3.2859	3.2800	23/32	5/32	3.2065
320	12	3.9180	3.9068	3.8639	3.8565	7/8	5/32	3.7845
322	12	4.325	4.3138	4.2709	4.2626	29/32	5/32	4.1915
324	12	4.716	4.7048	4.6619	4.6536	15/16	5/32	4.5825
326	12	5.106	5.0948	5.0519	5.0436	1	5/32	4.9725
328	12	5.497	5.4858	5.4429	5.4346	1-1/16	5/32	5.3635
330	12	5.888	5.8768	5.8339	5.8256	1-1/8	5/32	5.7545
332	8	6.284	6.2688	6.2028	6.1937	1-3/16	1/4	6.0993
334	8	6.659	6.6438	6.5778	6.5687	1-7/32	1/4	6.4743
338	8	7.472	7.4568	7.3908	7.3817	1-9/32	1/4	7.2873

† Tolerance ±.005 through 2.6672 dia; ±.010 for larger sizes

FEATURES/BENEFITS PAGE B15-3	SPECIFICATION/HOW TO ORDER PAGE B15-7	NOMENCLATURE PAGE B15-8	SELECTION PAGE B15-13

SELECTION/DIMENSIONS



USAF 300 Series Bearing Locknut & Washers

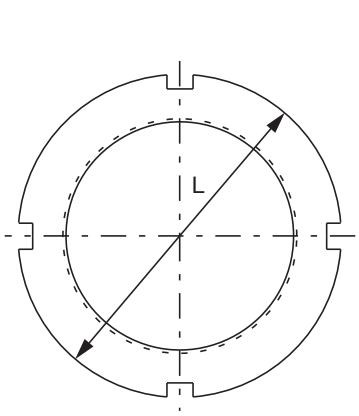

LOCKNUT

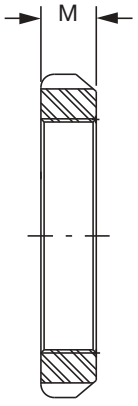

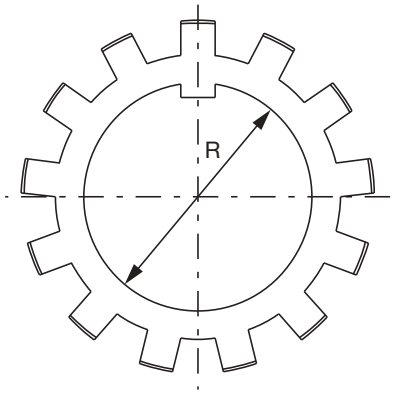

LOCKWASHER

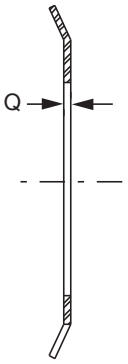

Housing	Locknut		Lockwasher		L (Inch)	M (Inch)	R (Inch)	Q (Inch)
	Descrip.	Part No.	Descrip.	Part No.				
308	N08	**407305**	W08	**419151**	2.25	0.44	1.583	0.048
309	N09	**419187**	W09	**419180**	2.53	0.44	1.792	0.048
310	N10	**419188**	W10	**419181**	2.69	0.50	1.992	0.048
311	N11	**419184**	W11	**419182**	2.97	0.50	2.182	0.053
312	N12	**407302**	W12	**419008**	3.16	0.53	2.400	0.053
313	N13	**419185**	W13	**419183**	3.38	0.56	2.588	0.053
314	N14	**407306**	W14	**419153**	3.62	0.56	2.791	0.053
315	AN15	**460901**	W15	**419150**	3.88	0.59	2.988	0.072
316	AN16	**460902**	W16	**419152**	4.16	0.59	3.192	0.072
317	AN17	**460903**	W17	**419154**	4.41	0.62	3.410	0.072
320	AN20	**460905**	W20	**419158**	5.19	0.75	4.003	0.094
322	AN22	**460906**	W22	**419160**	5.72	0.78	4.410	0.125
324	AN24	**041071**	W24	**419162**	6.12	0.81	4.816	0.125
326	AN26	**041064**	W26	**419164**	6.75	0.88	5.209	0.125
328	AN28	**041065**	W28	**419166**	7.09	0.94	5.600	0.125
330	AN30	**041072**	W30	**419168**	7.69	0.97	6.001	0.156
332	AN32	**041066**	W32	**419170**	8.06	1.03	6.407	0.156
334	AN34	**041067**	W34	**419172**	8.66	1.06	6.782	0.156
338	AN38	**041068**	W38	**419176**	9.47	1.12	7.595	0.156



USAF Stabilizing Rings

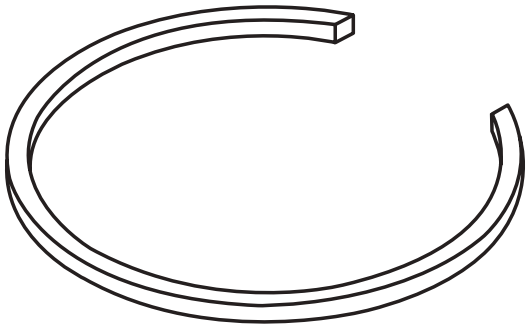

Housing	Stab. Ring No.	Stab. Ring Part No. ▲
509	9-9	**041987**
510	10-8	**042335**
511	11-9	**042315**
513	13-0	**042316**
515/215	15-0	**041174**
516/216	16-13	**041172**
517/217	17-14	**041175**
518/218	18-15	**041173**
520/220	20-17	**041176**
522/222	22-19	**041177**
524/224	24-20	**041185**
526/226	26-0	**041178**
528/228	28-0	**041179**
530/230	30-0	**041186**
532/232	32-0	**041180**
534/234	34-0	**041181**
536/236	36-30	**041184**
538/238	38-32	**041182**
540/240	40-34	**046639**
544S/544/244	44-38	**041183**
* 048	A8897	**041161**
* 052	A8898	**422554**
* 056/056L	A8819	**041213**

Housing	Stab. Ring No.	Stab. Ring Part No. ▲
308	10-8	**042335**
609/309	11-9	**042315**
610/310	0-10	**046642**
611/311	6-11	**046632**
312	15-0	**041174**
613/313	16-13	**041172**
314	17-14	**041175**
615/315	18-15	**041173**
616/316	19-16	**046643**
617/317	20-17	**041176**
620/320	24-20	**041185**
622/322	0-22	**046635**
624/324	0-24	**046634**
626/326	0-26	**046637**
628/328	0-28	**046638**
630/330	36-30	**041184**
632/332	38-32	**041182**
634/334	40-34	**040850**
638/338	44-38	**041183**

* Two stabilizing rings required per housings

▲ Part numbers for reference only. Housings come equipped with stabilizing rings enclosed

FEATURES/BENEFITS PAGE B15-3	SPECIFICATION/HOW TO ORDER PAGE B15-7	NOMENCLATURE PAGE B15-8	SELECTION PAGE B15-13

SELECTION/DIMENSIONS

USAF Pillow Block - 500 & 200

DOWEL PIN, LUBRICATION & MOUNTING HOLE POSITIONS

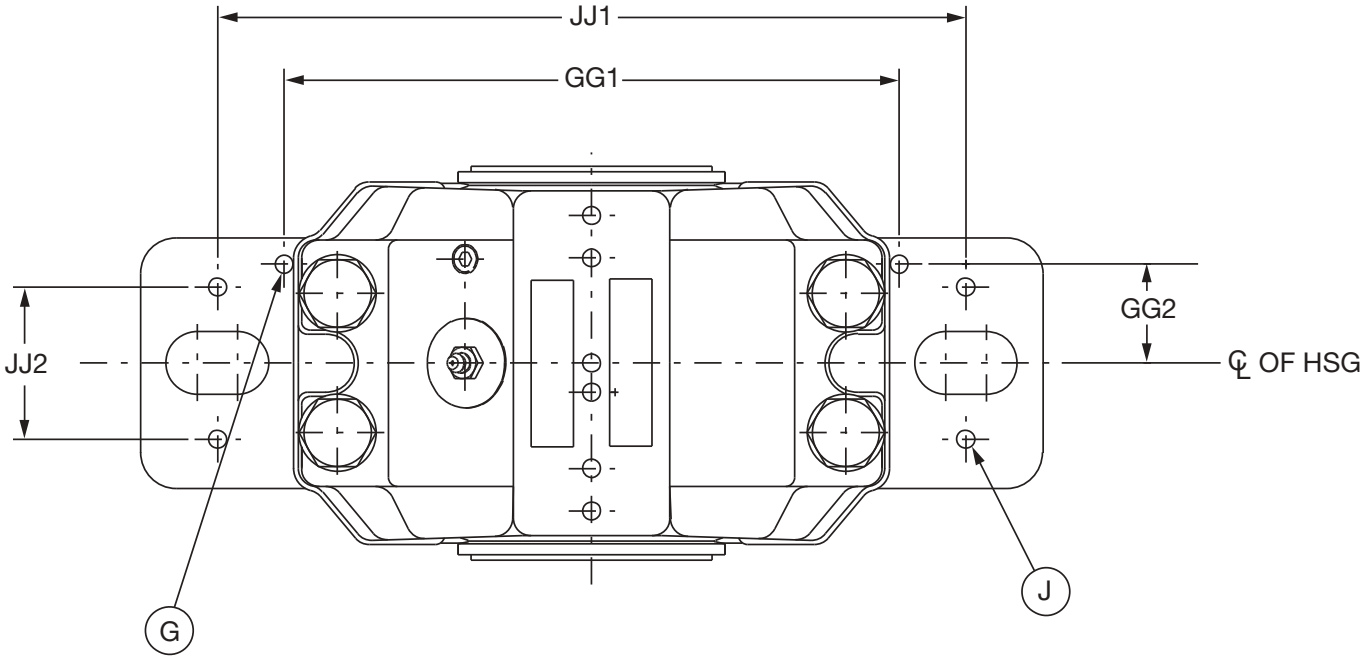

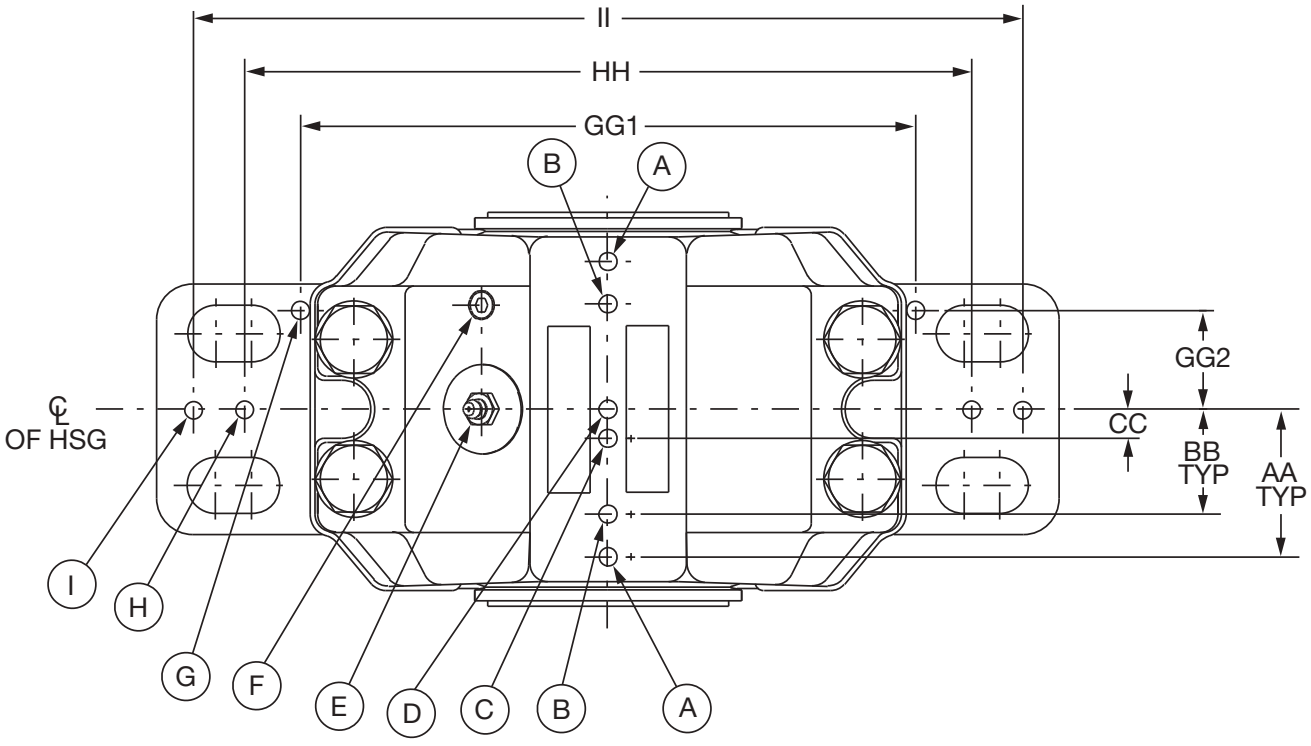



USAF Pillow Block - 500 & 200
DOWEL PIN, LUBRICATION & MOUNTING HOLE POSITIONS

Item	Description
A	Optional Seal Grease Location
B	Optional Location For Vent, Vibration Pickup And/or Grease Location For Non W33 Grooved Bearing
C	Position For Thermocouple Location
D	Position For Lubrication Of Bearing With W33 Groove
E	Lubrication Port For W33 Groove
	Groove Bearing Drilled Standard On Pillow Blocks
F	Pre-Drilled And Tap Location For Vent Or Side Lubrication For Bearing Without W33 Groove
G	Dowel Pin Location For Metric Plummer Blocks
H	Drilling Location For Two Bolt Mounting Or Optional Dowel Pin Location
I	Optional Location For Dowel Pin Location
J	Drilling Location For Four Bolt Mounting Or Optional Dowel Pin Location

USAF Housing	AA	BB	CC	GG1	GG2	G Max Dia	HH	H		II	JJ1	JJ2	J	
								Hole Size	Bolt Size				Hole Size	Bolt Size
509	1.45	0.84	0.25	5.31	0.91	15/64	-	-	-	-	6.31	1.34	7/16	3/8
510	1.53	0.89	0.27	5.31	0.91	15/64	-	-	-	-	6.31	1.34	7/16	3/8
511	1.66	1.00	0.28	6.69	1.06	5/16	-	-	-	-	7.88	1.56	9/16	1/2
513	1.84	1.28	0.34	7.50	1.25	5/16	9.06	11/16	5/8	10.25	8.66	1.88	9/16	1/2
515/215	1.88	1.22	0.36	7.50	1.25	5/16	9.06	11/16	5/8	10.25	8.66	1.88	9/16	1/2
516/216	2.03	1.38	0.31	8.59	1.38	5/16	10.25	13/16	3/4	11.59	9.94	2.06	11/16	5/8
517/217	2.06	1.47	0.41	8.59	1.38	5/16	10.25	13/16	3/4	11.59	9.94	2.06	11/16	5/8
518/218	2.38	1.50	0.44	9.44	1.45	5/16	11.91	13/16	3/4	12.63	11.03	2.28	11/16	5/8
520/220	2.09	1.72	0.53	10.25	1.61	5/16	12.59	15/16	7/8	14.36	11.81	2.59	13/16	3/4
522/222	2.81	1.94	0.59	11.03	1.78	15/32	13.78	15/16	7/8	15.50	12.91	2.91	13/16	3/4
524/224	3.13	1.91	0.69	11.42	1.78	15/32	13.88	15/16	7/8	15.88	13.00	2.91	13/16	3/4
526/226	3.25	2.09	0.75	12.78	2.05	15/32	14.97	1-1/16	1	17.38	14.56	3.09	15/16	7/8
528/228	3.48	2.53	0.75	13.59	2.16	15/32	16.53	1-5/16	1-1/4	18.69	15.75	3.63	1-1/16	1
530/230	3.84	2.53	0.81	14.75	2.38	15/32	17.72	1-5/16	1-1/4	19.50	16.94	3.94	1-1/16	1
532/232	4.09	2.56	0.91	15.56	2.36	15/32	18.50	1-5/16	1-1/4	20.28	17.72	3.94	1-1/16	1
534/234	4.13	3.00	1.00	-	-	-	20.50	1-9/16	1-1/2	23.38	-	-	-	-
536/236	4.31	3.00	1.00	-	-	-	22.25	1-9/16	1-1/2	25.25	-	-	-	-
538/238	4.50	3.13	1.13	-	-	-	23.00	1-9/16	1-1/2	26.63	-	-	-	-
540/240	4.86	3.22	1.13	-	-	-	23.75	1-9/16	1-1/2	27.25	-	-	-	-
544/244	5.20	3.63	1.19	-	-	-	26.83	1-13/16	1-3/4	30.75	-	-	-	-
048	4.86	3.22	1.13	-	-	-	23.75	1-9/16	1-1/2	27.25	-	-	-	-
052	5.20	3.63	1.19	-	-	-	26.83	1-13/16	1-3/4	30.75	-	-	-	-
056	5.67	3.75	1.20	-	-	-	27.88	2-1/16	2	32.25	-	-	-	-

SELECTION/DIMENSIONS

USAF Pillow Block - 600 & 300

DOWEL PIN, LUBRICATION & MOUNTING HOLE POSITIONS

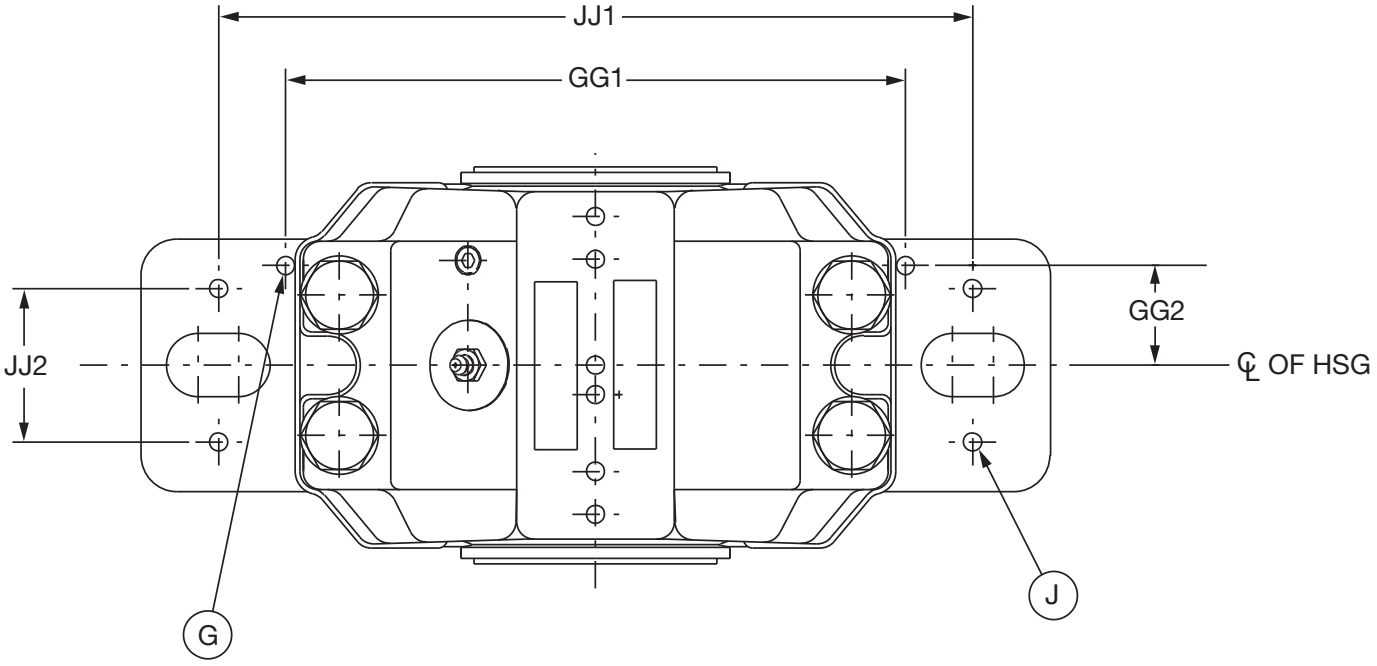

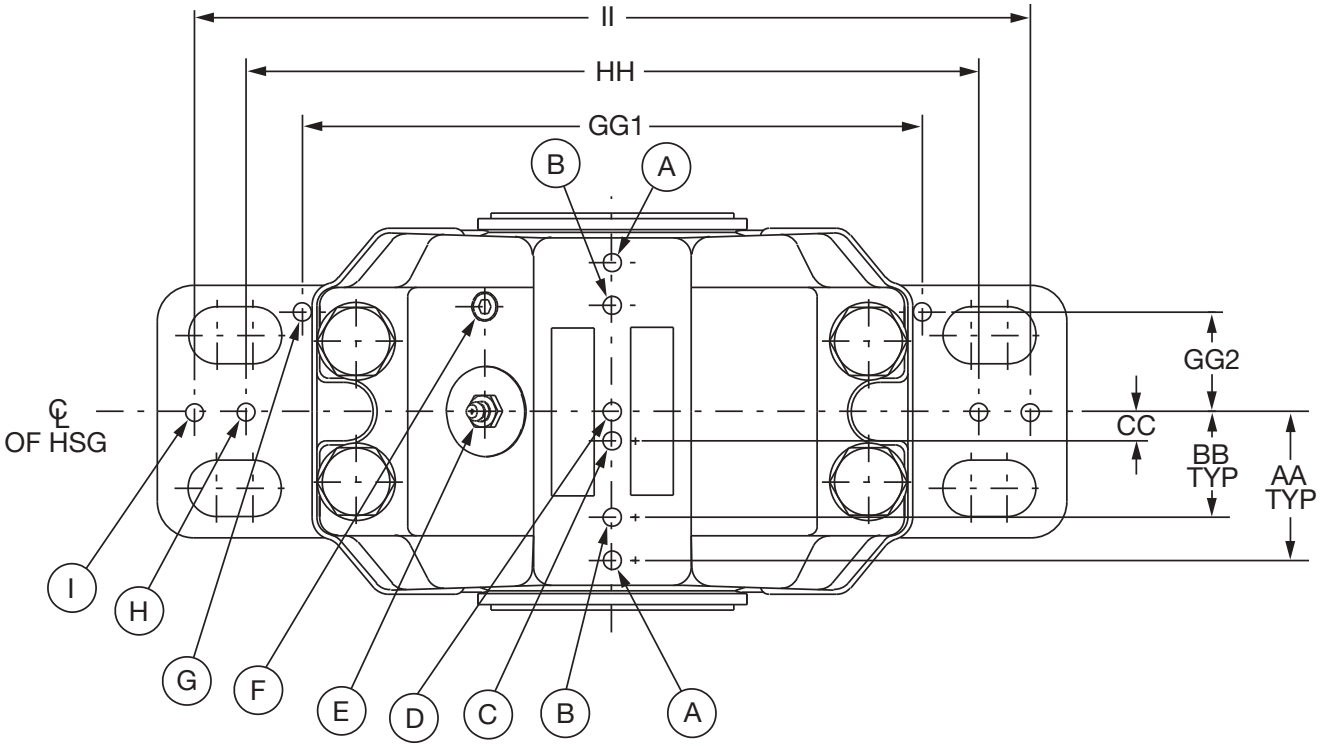

FEATURES/BENEFITS PAGE B15-3	SPECIFICATION/HOW TO ORDER PAGE B15-7	NOMENCLATURE PAGE B15-8	SELECTION PAGE B15-13



USAF Pillow Block - 600 & 300

DOWEL PIN, LUBRICATION & MOUNTING HOLE POSITIONS

Item	Description
A	Optional Seal Grease Location
B	Optional Location For Vent, Vibration Pickup And/Or Grease Location For Non W33 Grooved Bearing
C	Position For Thermocouple Location
D	Position For Lubrication Of Bearing With W33 Groove
E	Lubrication Port For W33 Groove
	Groove Bearing Drilled Standard On Pillow Blocks
F	Pre-Drilled And Tap Location For Vent Or Side Lubrication For Bearing Without W33 Groove
G	Dowel Pin Location For Metric Plummer Blocks
H	Drilling Location For Two Bolt Mounting Or Optional Dowel Pin Location
I	Optional Location For Dowel Pin Location
J	Drilling Location For Four Bolt Mounting Or Optional Dowel Pin Location

USAF Housing	AA	BB	CC	GG1	GG2	G Max Dia	HH	H		II	JJ1	JJ2	J	
								Hole Size	Bolt Size				Hole Size	Bolt Size
308	1.53	0.89	0.27	5.31	0.91	15/64	-	-	-	-	6.31	1.34	7/16	3/8
609/309	1.66	1.00	0.28	6.69	1.06	5/16	-	-	-	-	7.88	1.56	9/16	1/2
610/310	1.84	1.00	0.34	6.77	1.06	5/16	-	-	-	-	7.88	1.56	9/16	1/2
611/311	1.84	1.56	0.34	7.50	1.25	5/16	9.06	11/16	5/8	10.25	8.66	1.88	9/16	1/2
312	1.88	1.22	0.36	7.50	1.25	5/16	9.06	11/16	5/8	10.25	8.66	1.88	9/16	1/2
613/313	2.03	1.38	0.31	8.59	1.38	5/16	10.25	13/16	3/4	11.59	9.94	2.06	11/16	5/8
314	2.06	1.47	0.41	8.59	1.38	5/16	10.25	13/16	3/4	11.59	9.94	2.06	11/16	5/8
615/315	2.38	1.50	0.44	9.44	1.45	5/16	11.41	13/16	3/4	12.63	11.03	2.28	11/16	5/8
616/316	2.53	1.63	0.53	9.44	1.45	5/16	11.41	13/16	3/4	13.00	11.03	2.28	11/16	5/8
617/317	2.69	1.72	0.53	10.25	1.61	5/16	12.59	15/16	7/8	14.36	11.81	2.59	13/16	3/4
620/320	3.13	1.91	0.69	11.42	1.18	15/32	13.88	15/16	7/8	15.88	13.00	2.91	13/16	3/4
622/322	3.25	2.09	0.75	12.78	2.05	15/32	14.99	1-1/16	1	17.38	14.56	3.16	15/16	7/8
624/324	3.84	2.53	0.81	14.75	2.38	15/32	17.72	1-5/16	1-1/4	19.50	16.94	3.94	1-1/16	1
626/326	4.09	2.56	0.91	15.56	2.36	15/32	18.50	1-5/16	1-1/4	20.28	17.72	3.94	1-1/16	1
628/328	4.13	3.00	1.00	-	-	-	20.50	1-9/16	1-1/2	23.38	-	-	-	-
630/330	4.31	3.00	1.00	-	-	-	22.25	1-9/16	1-1/2	25.25	-	-	-	-
632/332	4.50	3.13	1.13	-	-	-	23.00	1-9/16	1-1/2	26.62	-	-	-	-
634/334	4.86	3.22	1.13	-	-	-	23.75	1-9/16	1-1/2	27.25	-	-	-	-
638/338	5.20	3.63	1.19	-	-	-	26.31	1-13/16	1-3/4	30.75	-	-	-	-

FEATURES/BENEFITS PAGE B15-3	SPECIFICATION/HOW TO ORDER PAGE B15-7	NOMENCLATURE PAGE B15-8	SELECTION PAGE B15-13

SELECTION/DIMENSIONS



USAF Housing VS Seal Group Interchange Chart

All DODGE seals are identified as follows:

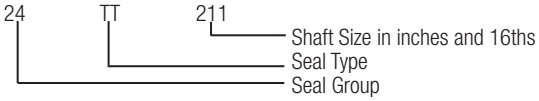

Seal group numbers identify common housing seal grooves found on different series housings. The standard shaft sizes for various housings are shown.

Shaft Size	Housing	Seal* Group
1-7/16	509	08
	308	
	609	
1-11/16	510	10
	309	
	610	
1-7/8	310	12
1-15/16	511	
	308	
	611	
2-1/16	311	14
2-1/8	309	
2-3/16	513	
	613	
2-1/4	312	
2-3/8	310	18
2-7/16	515	20
	615	
	313	22
2-1/2	515	20
	615	
2-5/8	314	22
2-9/16	311	
2-11/16	516	24
	616	
2-3/4	516	
	616	
2-13/16	215	
	315	
2-7/8	312	26
2-15/16	517	28
	617	
3	216	
	316	
	517	
	617	
3-1/16	313	
3-3/16	217	32
	317	
	518	34
3-1/4	314	32
3-3/8	218	36
3-7/16	215	38
	315	
	520	46
	620	
3-1/2	520	
	620	

Shaft Size	Housing	Seal* Group
3-5/8	216	38
	316	
3-13/16	220	50
	320	
3-15/16	217	42
	317	
	522	50
	622	
4	522	
	622	
4-1/8	218	44
4-3/16	524	52
	222	
	624	
	322	
4-7/16	526	54
	626	
4-1/2	220	
	320	
	526	
	626	
4-9/16	224	
	324	
4-7/8	222	56
	322	
4-15/16	226	
	326	
	528	
	628	
5	528	
	628	
5-3/16	530	
	630	
5-5/16	224	58
	228	
	324	
	328	
5-7/16	532	60
	632	
5-1/2	532	
	632	
5-3/4	230	62
	330	
5-7/8	226	
	326	
5-15/16	534	64
	634	
6	534	
	634	
6-1/16	232	
	332	

Shaft Size	Housing	Seal* Group
6-1/4	228	66
	328	
6-7/16	334	68
	234	
	536	
6-1/2	536	
6-5/8	230	70
	330	
6-7/8	236	72
6-15/16	538	
	638	
7	232	
	332	
	538	
	638	
7-3/16	540	74
7-1/4	238	
	338	
7-7/16	334	76
	234	
7-1/2	544S	
7-5/8	240	
7-13/16	236	78
7-15/16	544	
8		
8-5/16	244	80
8-3/8	238	
	338	
8-7/16	048	90
8-1/2		
8-3/4	240	82
8-15/16	048	90
9	3248	
9-7/16	052	84
9-1/2	3152	
	3252	
9-9/16	244	
9-15/16	56	92
10		
10-7/16	056L	94
10-1/2	3156	
	3256	
10-15/16	060	96
11	3160	
	3260	
11-7/16	064	98
11-1/2		

Shaft Size	Housing	Seal* Group
11-15/16	064L	100
12	3164	
	3264	
12-7/16	068	
12-1/2	3168	102
	3268	
12-15/16	072	104
13		
13-7/16	072L	106
13-1/2	3172	
13-15/16	076	108
14	3176	
15	080	110
15-3/4	084	112

Seal groups in 200/300 housing require two seals of different diameters.



DODGE Cool Lube 2 System

Custom Engineered for oil lubricated, mounted bearings on fan applications. The DODGE Cool Lube System provides an attractive and reliable alternative to conventional grease and static oil bearing lubrication methods for industrial fan applications. It is particularly suited for applications where bearing operating temperatures and speeds approach maximum permissible levels and for harsh and dirty environments.

Enhance your spherical roller bearing operation by continuous oil cooling, filtration, and proper oil level maintenance while your fan is running. Eighty percent of all mounted bearing failures are caused by contamination and lubrication issues. The DODGE Cool Lube System helps to minimize this risk.

The DODGE Cool Lube System provides reduced maintenance costs and increased uptime by providing:

- Bearing Temperature Reduction: Increases bearing reliability through bearing temperature reduction. Reducing bearing operating temperatures is proven to significantly increase roller bearing fatigue life.
- Oil Filtration: Increases Bearing Life and extends maintenance periods through continuous oil filtration. The DODGE Cool Lube System continuously circulates and filters harmful particles from the bearing oil sump.
- Automatic Oil Level Control: The DODGE Cool Lube System will maintain the proper oil level within the oil sump.

One Cool Lube system for two (2) mounted bearings:

Dodge Part Numbers with flow meter range of 0.05 to 0.50 GPM

- **063485** for three phase motor
- **063486** for single phase motor
- **078327** for XP (Exp. Proof) three phase motor
- **078328** for 575 VAC three phase motor

Dodge Part Numbers with flow meter range of 0.50 to 4.0 GPM

- **063487** for three phase motor
- **063488** for single phase motor
- **078289** for XP (Exp. Proof) three phase motor
- **078290** for 575 VAC three phase motor



Cool Lube 2 System Specifications:

- 5 Gallon Tank with Removable Cover
- Pump 2.0 GPM Flow
- In-line Filter with Clog Indicator and Clog Auto-Bypass
- 3-way valve to change filter while unit is in operation
- Pump Safety Relief Valve
- Bearing Line Relief Valve
- Filter and Bearing Supply Pressure Gauges
- Air to Oil Heat Exchanger
- Two Supply Line Needle Valves and Flow Meters with flow range 0.05 to 0.50 GPM or 0.5 to 4.0 GPM
- Temperature Gauge
- Oil Sight Gauge
- Reservoir Breather Cap
- Baldor NEMA Motor
- All Components Mounted to a Base Plate

Optional Features:

- 260 Watt Oil Heater with Thermostat sold separately. If required order one of the following:
  – p/n 434725 – 260 watt x 120v Heater
  – p/n 434726 – 260 watt x 240v Heater
- Oil Level Switch
- Temperature/Oil Level Switch Assembly
  – p/n 434941 (sold separately)
- Duplex Dual Filter Arrangement

NOTE: Replacement Filter Part Number **078358**

FEATURES/BENEFITS PAGE B15-3	SPECIFICATION/HOW TO ORDER PAGE B15-7	NOMENCLATURE PAGE B15-8	SELECTION PAGE B15-13

SELECTION/DIMENSIONS



DODGE Cool Lube System helps to:

Prevent bearing mechanical distress:



- Lowers internal bearing friction thus decreasing bearing operating temperatures
- Minimizes roller to raceway, metal to metal contact
- Reduces roller skidding damage that can occur in lightly loaded applications
- Supplies lubricant directly to load carrying rolling elements
- Increases lube life due to lower temperatures
- Minimizes cage sliding friction wear
- Minimizes effect of ineffective sealing

Prevent bearing contamination:



- Filters out contamination which has passed through seals
- Helps to remove water contamination due to condensation from bearings if a water absorbing filter is used
- Flushes worn raceway, rollers & cage particles from bearings
- Removes contamination caused during installation

Lower maintenance costs:

- Oil change outs are simple
- No need to break housing cap bolts to clean out old grease
- Oil can be inspected for distress on a regular basis to determine oil PM schedule
- Lower bearing temperatures increase service life
- Lower contamination levels increase service life

Once bearing raceway fatigue begins progression of damage is rapid



At first sign of Damage | After 1,000 Hours | After 1,200 Hours

CONTENTS

Plummer Blocks
Metric-Dimensioned Housings

Features/Benefits
- ISN B16-3
- ISNX B16-14
- SNX B16-25
- SDX / SDXD B16-24, B-16-25

Nomenclature B16-6

Selection
- Imperial Housing Style B16-7
- ISN B16-8
- ISN Plummer Block B16-12
- ISNX Hydraulic B16-18

Dimensions
- ISN B16-13
- ISN Bearing Inserts B16-16
- ISNX Hydraulic B16-18
- ISN Lockplate Kits B16-21
- ISN End Cover B16-21
- Imperial Spanner B16-22
- SNX B16-26
- SDX B16-42
- SDXD B16-46

Part Number Index INDEX-1

Key Word Index KEYWORD-1

CONTENTS

FEATURES/BENEFITS

ISN

Shaft Ready / Adapter Mount / SN Dimensions



Patented Adapter Mounting System

- Quick installation and removal in 15 minutes or less
- Clearance setting without feeler gauges
- Full shaft contact reduces or eliminates fretting corrosion
- Locknut tightens the bearing on the shaft when turned clockwise
- Counter-clockwise rotation of the locknut loosens the bearing from the shaft
- 22200 series spherical roller bearing with steel cage and guide ring



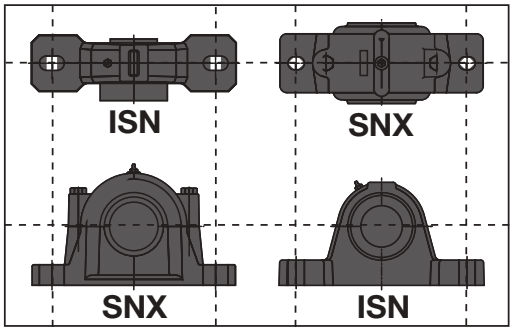

Dimensionally interchangeable with housings of the SN family. Preassembled - no risk of bearing contamination during field assembly or incorrect parts.

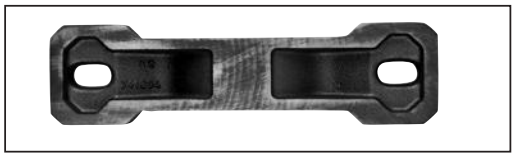

Stronger feet for higher load capacity.



Cast-in drilling location dimples: for dowels or four-bolt mounting.

FEATURES/BENEFITS

ISNX
Hydraulic Mount/Dismount with SN Dimensions

Patented Hydraulic Mount and Dismount System

- Incorporates a hydraulic mount and dismount nut as a standard feature on the inner unit for quicker installation and removal of bearing.
- Totally sealed inner unit prevents contamination during installation
- Harsh duty sealing system is functionally equivalent to a standard Taconite seal
- SN/SD dimensioned housing that matches ISO 113 standards
- Incorporates standard 23144 thru 23176 double row spherical roller bearings
- 150mm thru 360mm bore size
- High strength ductile iron housing is standard
- Incorporates a fixing ring for expansion/non-expansion capability

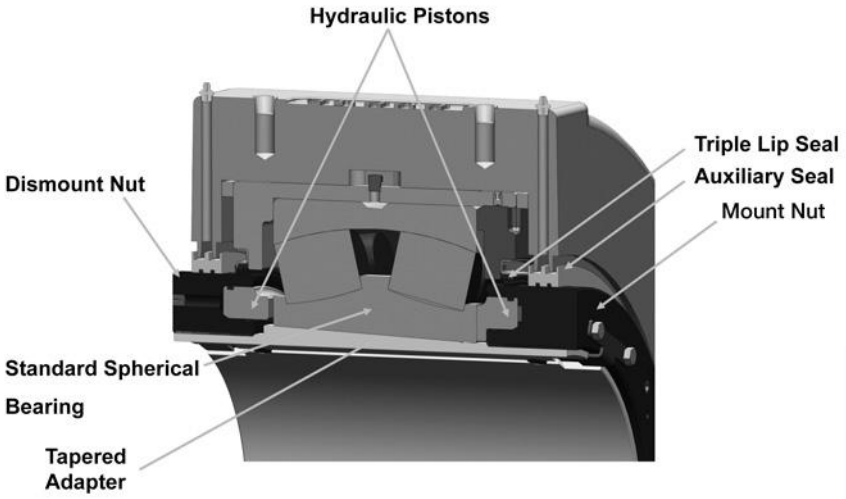

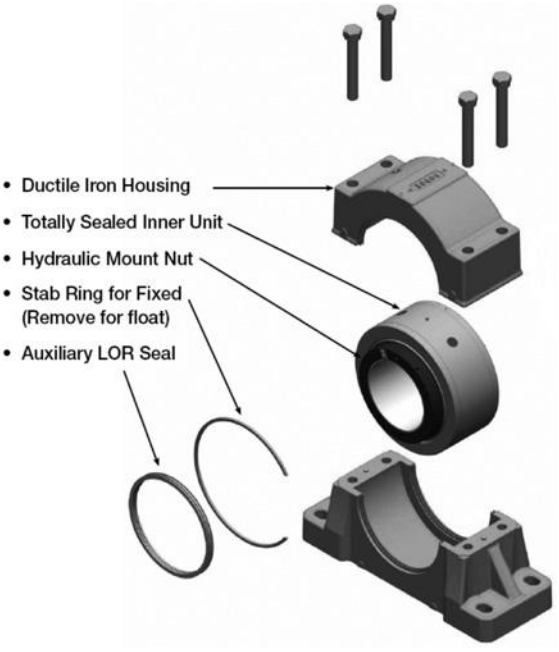

FEATURES/BENEFITS

ISN

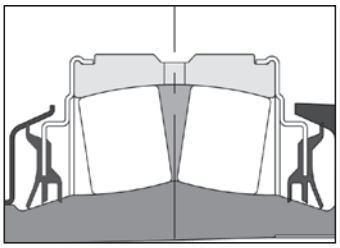

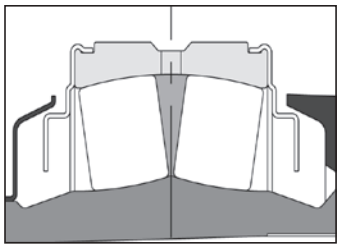

TRIDENT™ Seal - Patented design triple-lip rubbing seal with corrosion resistant flingers; positive seal contact up to ±1° misalignment.

Labyrinth Seal - Patented design clearance steel seal carrier with corrosion resistant flingers.

ISNX

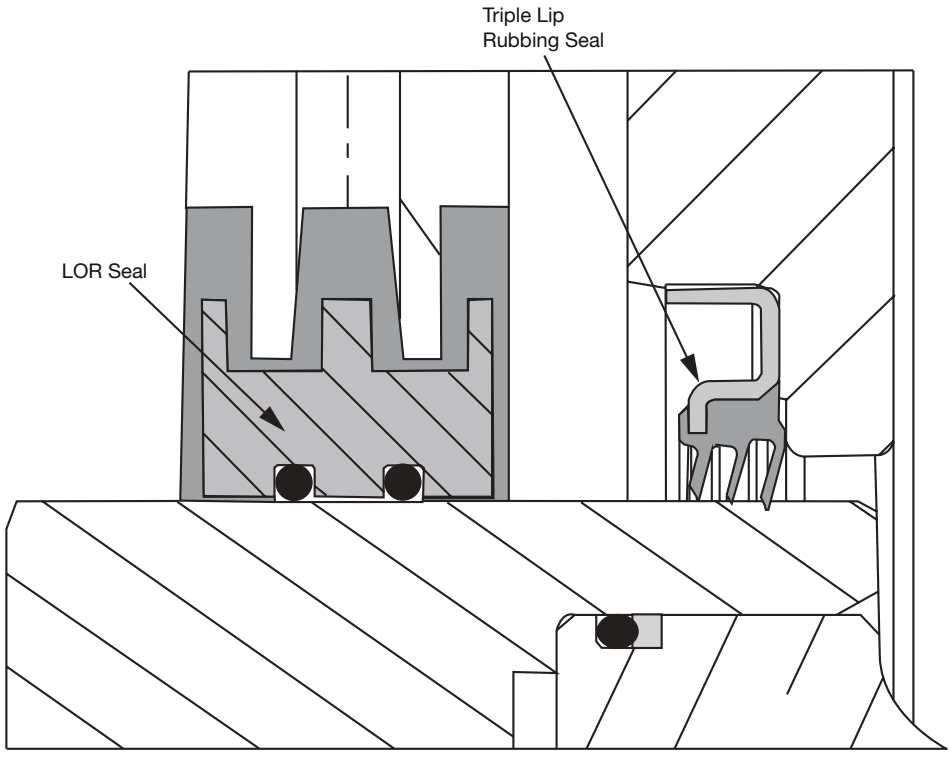

NOMENCLATURE

ISN BEARING NOMENCLATURE

P2B524 - ISN - 110MFR

Housing Style Options:
P2B = Plummer Block, 2-Bolt Base, Cast Iron
F4B = Flange 4-Bolt, Cast Iron

Housing Size:
5xx describes the associated DIN - SN Pillow block housing size

Bearing Type Options:
ISN, SN style w/Imperial locking mechanism
IP = Imperial Mount
ISAF- Imperial Mount SAF
ISNX HYD = Hydraulic Mount/Dismount
SNX = Plummer Block to 140 mm
SDX = Plummer Block to 320 mm
SDXD = Plummer Block to 320 mm

M = Size in millimeters otherwise 1-10/16”
Other Data / Seals:
F = non-expansion
L = expansion (non-locating)
R = Trident Rubbing Seal
S = Labyrinth Seal
HYD = Integral Hydraulic Mounting/Dismounting

IMPERIAL HOUSING STYLES



ISN
35 - 140 mm
1-1/4” - 5-1/2”

ISAF
35 - 125 mm
1-7/16” - 7”





ISNX HYD
150 - 360 mm

ISAF HYD
140 - 380 mm
5-7/16” - 15”





P2B
35 - 100 mm
1-1/8” - 4”

P4B
35 - 140 mm
2-3/8” - 5-1/2”

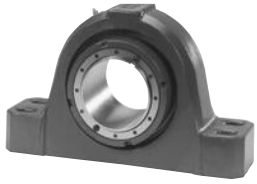



F4B
35 - 100 mm
1-7/16” - 3-15/16”

FC
35 - 125 mm
1-1/8” - 5”





WSTU
35 -100 mm
1-1/8” - 4”

Insert / Lager
35 - 140 mm
1-1/8” - 7”





EP2B
35 -90 mm
1-3/8” - 3-1/2”

EP4B
60 -125 mm
2-1/4” - 5”

NOMENCLATURE

ISN RATINGS

Table 1: ISN Spherical Roller Bearings

Housing	Bearings	Maximum Allowable Adapter Thrust	Basic Load Ratings		e	$F_A/F_R \le e$		$F_A/F_R > e$		Max. RPM ★		Maximum Expansion
			Dynamic Capacity (C)	Static Capacity (C_0)		X_1	Y_1	X_2	Y_2	Trident Seal	Labyrinth Seal	
		kN	kN	kN								
507 508	**22208**	2.7	93	94	0.28	1.0	2.4	0.67	3.6	3975	6000	3.18
509	**22209**	3.1	93	105	0.26	1.0	2.6	0.67	3.9	3725	5600	3.18
510 511	**22210**	3.4	98	118	0.24	1.0	2.8	0.67	4.2	3520	5300	6.35
512	**22211**	4.1	120	145	0.23	1.0	2.9	0.67	4.3	3000	4500	6.35
513	**22213**	6.0	174	216	0.24	1.0	2.8	0.67	4.2	2400	3800	6.35
515 516 517	**22215**	7.0	185	236	0.22	1.0	3.1	0.67	4.6	2250	3400	6.35
518 519	**22218**	10.8	285	363	0.23	1.0	2.9	0.67	4.3	1825	2600	6.35
520 522	**22220**	13.8	369	463	0.24	1.0	2.8	0.67	4.2	1530	2200	7.94
524	**22222**	17.5	463	587	0.25	1.0	2.7	0.67	4.0	1325	2000	9.53
526 528	**22226**	25.0	650	872	0.26	1.0	2.6	0.67	4.0	1175	1800	9.53
530	**22228**	28.5	738	1050	0.25	1.0	2.7	0.67	4.0	1100	1700	9.53
532	**22232**	38.4	979	1401	0.26	1.0	2.6	0.68	3.9	975	1500	9.53

Refer to pages B10-1 and B10-2 for information on bearing calculations, including L_{10} life and loads

★ Maximum grease speed is dependant on load and ambient conditions. Consult Dodge Engineering.

ISN EASY SELECTION

Table 2: ISN Double Row Spherical Roller Bearing

Housing	L_{10} Life Hours	Allowable Equivalent Radial Load Rating (kN) at Various RPM																					
		50	100	150	250	500	750	1000	1300	1500	1700	1800	2000	2200	2600	2750	3000	3400	3800	4500	5300	5600	6000
507	10000	33	27	24	21	17	15	14	13	12	12	11	11	11	10	10	10	7	6	9	8	8	8
	30000	24	20	17	15	12	11	10	9	9	8	8	8	8	7	7	7	7	6	6	6	6	6
	40000	22	18	16	14	11	10	9	8	8	8	8	7	7	7	7	6	6	6	6	5	5	5
	60000	20	16	14	12	10	9	8	7	7	7	7	6	6	6	6	6	6	5	5	5	5	5
	100000	17	14	12	10	8	7	7	6	6	6	6	6	5	5	5	5	5	5	4	4	4	4
508	10000	33	27	24	21	17	15	14	13	12	12	11	11	11	10	10	10	7	6	9	8	8	8
	30000	24	20	17	15	12	11	10	9	9	8	8	8	8	7	7	7	7	6	6	6	6	6
	40000	22	18	16	14	11	10	9	8	8	8	8	7	7	7	7	6	6	6	6	5	5	5
	60000	20	16	14	12	10	9	8	7	7	7	7	6	6	6	6	6	6	5	5	5	5	5
	100000	17	14	12	10	8	7	7	6	6	6	6	6	5	5	5	5	5	5	4	4	4	4
509	10000	33	27	24	21	17	15	14	13	12	12	11	11	11	10	10	10	7	9	9	6	8	
	30000	24	20	17	15	12	11	10	9	9	8	8	8	8	7	7	7	7	8	6	6	6	
	40000	22	18	16	14	11	10	9	8	8	8	8	7	7	7	7	6	6	6	6	5	5	
	60000	20	16	14	12	10	9	8	7	7	7	7	6	6	6	6	6	6	5	5	5	5	
	100000	17	14	12	10	8	7	7	6	6	6	6	6	5	5	5	5	5	5	4	4	4	
510	10000	35	29	25	22	18	16	14	13	13	12	12	12	11	11	11	10	7	10	9	9		
	30000	25	21	18	16	13	11	10	10	9	9	9	8	8	8	8	7	7	7	7	6		
	40000	23	19	17	14	12	10	10	9	8	8	8	8	8	7	7	7	7	6	6	6		
	60000	21	17	15	13	10	9	8	8	7	7	7	7	7	6	6	6	6	6	5	5		
	100000	18	14	13	11	9	8	7	7	6	6	6	6	6	5	5	5	5	5	5	4		
511	10000	35	29	25	22	18	16	14	13	13	12	12	12	11	11	11	10	7	10	9	9		
	30000	25	21	18	16	13	11	10	10	9	9	9	8	8	8	8	7	7	7	7	6		
	40000	23	19	17	14	12	10	10	9	8	8	8	8	8	7	7	7	7	6	6	6		
	60000	21	17	15	13	10	9	8	8	7	7	7	7	7	6	6	6	6	6	5	5		
	100000	18	14	13	11	9	8	7	7	6	6	6	6	6	5	5	5	5	5	5	4		
512	10000	43	35	31	27	22	19	18	16	16	15	15	14	14	13	13	9	12	12	11			
	30000	31	25	22	19	16	14	13	12	11	11	11	10	10	10	9	9	9	9	8			
	40000	29	23	21	18	14	13	12	11	10	10	10	9	9	9	9	8	8	8	7			
	60000	25	21	18	16	13	11	10	10	9	9	9	8	8	8	8	7	7	7	7			
	100000	22	18	16	13	11	10	9	8	8	8	7	7	7	7	7	6	6	6	6			
513	10000	61	50	44	38	31	27	25	23	22	21	21	20	14	19	18	18	17	17				
	30000	44	36	32	27	22	19	18	17	16	15	15	15	14	13	13	13	12	12				
	40000	40	33	29	25	20	18	16	15	15	14	14	13	13	12	12	12	113	11				
	60000	36	29	26	22	18	16	15	13	13	12	12	12	11	11	11	10	10	10				
	100000	31	25	22	19	15	14	12	12	11	11	10	10	10	9	9	9	9	8				
515	10000	67	54	48	41	33	30	27	25	24	23	23	22	15	20	20	19	19					
	30000	48	39	34	30	24	21	20	18	17	17	16	16	15	15	14	14	14					
	40000	44	36	32	27	22	20	18	17	16	15	15	15	14	13	13	13	12					
	60000	39	32	28	24	20	17	16	15	14	14	13	13	13	12	12	11	11					
	100000	33	27	24	21	17	15	14	13	12	12	11	11	11	10	10	10	9					
516	10000	67	54	48	41	33	30	27	25	24	23	23	22	15	20	20	19	19					
	30000	48	39	34	30	24	21	20	18	17	17	16	16	15	15	14	14	14					
	40000	44	36	32	27	22	20	18	17	16	15	15	15	14	13	13	13	12					
	60000	39	32	28	24	20	17	16	15	14	14	13	13	13	12	12	11	11					
	100000	33	27	24	21	17	15	14	13	12	12	11	11	11	10	10	10	9					

Use the labyrinth (S) seal for applications to the right of the vertical line.

For applications in the Dark shaded areas, the maximum load for the specific speed is shown. The load does not correspond to the L_{10} shown.

Applications in the Light shaded areas may require high temperature lubrication. Please consult DODGE Engineering.

NOMENCLATURE

ISN EASY SELECTION

Table 2: ISN Double Row Spherical Roller Bearing (continued)

Housing	L_{10} Life Hours	Allowable Equivalent Radial Load Rating (kN) at Various RPM																					
		50	100	150	250	500	750	1000	1300	1500	1700	1800	2000	2200	2600	2750	3000	3400	3800	4500	5300	5600	6000
517	10000	67	54	48	41	33	30	27	25	24	23	23	22	15	20	20	19	19					
	30000	48	39	34	30	24	21	20	18	17	17	16	16	15	15	14	14	14					
	40000	44	36	32	27	22	20	18	17	16	15	15	15	14	13	13	13	12					
	60000	39	32	28	24	20	17	16	15	14	14	13	13	13	12	12	11	11					
	100000	33	27	24	21	17	15	14	13	12	12	11	11	11	10	10	10	9					
518	10000	105	85	76	65	53	47	43	40	38	37	26	35	34	32								
	30000	76	61	54	47	38	34	31	28	27	26	26	25	24	23								
	40000	69	56	50	43	35	31	28	26	25	24	24	23	22	21								
	60000	61	50	44	38	31	27	25	23	22	21	21	20	20	19								
	100000	53	43	38	33	26	23	21	20	19	18	18	17	17	16								
519	10000	105	85	76	65	53	47	43	40	38	37	26	35	34	32								
	30000	76	61	54	47	38	34	31	28	27	26	26	25	24	23								
	40000	69	56	50	43	35	31	28	26	25	24	24	23	22	21								
	60000	61	50	44	38	31	27	25	23	22	21	21	20	20	19								
	100000	53	43	38	33	26	23	21	20	19	18	18	17	17	16								
520	10000	133	108	96	82	67	59	54	50	35	46	45	44	43									
	30000	96	78	69	59	48	43	39	36	35	33	33	32	31									
	40000	88	71	63	54	44	39	36	33	32	31	30	29	28									
	60000	78	63	56	48	39	35	32	29	28	27	27	26	25									
	100000	67	54	48	41	33	30	27	25	24	23	23	22	21									
522	10000	133	108	96	82	67	59	54	50	35	46	45	44	43									
	30000	96	78	69	59	48	43	39	36	35	33	33	32	31									
	40000	88	71	63	54	44	39	36	33	32	31	30	29	28									
	60000	78	63	56	48	39	35	32	29	28	27	27	26	25									
	100000	67	54	48	41	33	30	27	25	24	23	23	22	21									
524	10000	167	135	120	103	84	74	68	45	60	58	57	55										
	30000	120	97	86	74	60	53	49	45	43	42	41	40										
	40000	110	89	79	68	55	49	45	41	40	38	38	36										
	60000	97	79	70	60	49	43	40	37	35	34	33	32										
	100000	84	68	60	52	42	37	34	31	30	29	29	28										
526	10000	234	190	168	144	117	104	69	88	84	81	80											
	30000	168	137	121	104	84	75	69	63	61	59	58											
	40000	154	125	111	95	77	69	63	58	56	54	53											
	60000	137	111	98	84	69	61	56	52	49	48	47											
	100000	117	95	84	72	59	52	48	44	42	41	40											
528	10000	234	190	168	144	117	104	69	88	84	81	80											
	30000	168	137	121	104	84	75	69	63	61	59	58											
	40000	154	125	111	95	77	69	63	58	56	54	53											
	60000	137	111	98	84	69	61	56	52	49	48	47											
	100000	117	95	84	72	59	52	48	44	42	41	40											
530	10000	266	216	191	164	133	118	78	100	96	92												
	30000	191	155	138	118	96	85	78	72	69	66												
	40000	176	143	126	108	88	78	71	66	63	61												
	60000	155	126	112	96	78	69	63	59	56	54												
	100000	133	108	96	82	67	59	54	50	48	46												
532	10000	353	287	254	218	177	113	144	133	127													
	30000	254	206	182	157	127	113	103	95	91													
	40000	233	189	167	144	117	103	95	88	84													
	60000	206	167	148	127	103	91	84	78	74													
	100000	177	144	127	109	89	78	72	67	64													

Use the labyrinth (S) seal for applications to the right of the vertical line.
For applications in the Dark shaded areas, the maximum load for the specific speed is shown. The load does not correspond to the L_{10} shown.
Applications in the Light shaded areas may require high temperature lubrication. Please consult DODGE Engineering.

FEATURES/BENEFITS PAGE B16-3	NOMENCLATURE PAGE B16-6	SELECTION PAGE B16-8	DIMENSIONS PAGE B16-13

IMPERIAL - ISN Spherical Roller Bearings

Table 4: Definition Of Operating Conditions For Unitized Spherical Roller Bearings

LOW SPEED	UP TO 20% OF MAX. RPM (TABLE 1)
MEDIUM SPEED	OVER 20% TO 80% OF MAX. RPM
HIGH SPEED	OVER 80% OF MAX. RPM
LIGHT LOAD	UP TO 8% OF **C** (TABLE 1)
NORMAL LOAD	OVER 8% TO 18% OF **C**
HEAVY LOAD	OVER 18% OF **C**
	C- DYNAMIC CAPACITY
LOW TEMPERATURE	-73°C to -7°C
MEDIUM TEMPERATURE	OVER -7°C to 93°C
HIGH TEMPERATURE	OVER 93°C to 122°C

SELECTION

ISN PLUMMER BLOCKS WITH TRIDENT SEALS

Series	Ø Shaft	Fixed bearing		Expansion Bearing		Hsg / Insert Pt #	Description	Sleeve Pt #	Description
		Part No.	Description	Part No.	Description				
507	30 mm	**071000**	P2B507-ISN-030MFR	**071017**	P2B507-ISN-030MLR	**071983**	ISN 507-22208 FR	**744975**	ADPTR-IP-22208-30M
	1-1/8	**747900**	P2B507-ISN-102 FR	**747904**	P2B507-ISN-102 LR	**071983**	ISN 507-22208 FR	**069286**	ADPTR-IP-22208-102
	1-3/16	**747901**	P2B507-ISN-103FR	**747905**	P2B507-ISN-103 LR	**071983**	ISN 507-22208 FR	**069287**	ADPTR-IP-22208-103
508	35 mm	**071001**	P2B508-ISN-035MFR	**071018**	P2B508-ISN-035MLR	**071984**	ISN 508-22208 FR	**744976**	ADPTR-IP-22208-35M
	1-1/4	**747908**	P2B508-ISN-104 FR	**747912**	P2B508-ISN-104 LR	**071984**	ISN 508-22208 FR	**069288**	ADPTR-IP-22208-104
	1-3/8	**747909**	P2B508-ISN-106 FR	**747913**	P2B508-ISN-106 LR	**071984**	ISN 508-22208 FR	**069289**	ADPTR-IP-22208-106
509	40 mm	**071002**	P2B509-ISN-040MFR	**071019**	P2B509-ISN-040MLR	**071985**	ISN 509-22209 FR	**744977**	ADPTR-ISN-22209-40M
	1-7/16	**747916**	P2B509-ISN-107 FR	**747920**	P2B509-ISN-107 LR	**071985**	ISN 509-22209 FR	**064153**	ADPTR-ISN-22209-107
	1-1/2	**747917**	P2B509-ISN-108 FR	**747921**	P2B509-ISN-108 LR	**071985**	ISN 509-22209 FR	**064154**	ADPTR-ISN-22209-108
510	45 mm	**071003**	P2B510-ISN-045MFR	**071020**	P2B510-ISN-045MLR	**071986**	ISN 510-22210 FR	**744978**	ADPTR-IP-22210-45M
	1-11/16	**747924**	P2B510-ISN-111 FR	**747928**	P2B510-ISN-111 LR	**071986**	ISN 510-22210 FR	**064155**	ADPTR-ISN-22210-111
	1-3/4	**747925**	P2B510-ISN-112 FR	**747929**	P2B510-ISN-112 LR	**071986**	ISN 510-22210 FR	**064156**	ADPTR-ISN-22210-112
511	50 mm	**071004**	P2B511-ISN-050MFR	**071021**	P2B511-ISN-050MLR	**071987**	ISN 511-22210 FR	**744979**	ADPTR-IP-22210-50M
	1-15/16	**747932**	P2B511-ISN-115 FR	**747936**	P2B511-ISN-115 LR	**071987**	ISN 511-22210 FR	**069296**	ADPTR-IP-22210-115
	2	**747933**	P2B511-ISN-200 FR	**747937**	P2B511-ISN-200 LR	**071987**	ISN 511-22210 FR	**069297**	ADPTR-IP-22210-200
512	55 mm	**071005**	P2B512-ISN-055MFR	**071022**	P2B512-ISN-055MLR	**071988**	ISN 512-22211 FR	**744980**	ADPTR-IP-22211-055M
	2-1/8	**748012**	P2B512-ISN-202 FR	**748013**	P2B512-ISN-202 LR	**071988**	ISN 512-22211FR	**064157**	ADPTR-ISN-22211-202
513	60 mm	**071006**	P2B513-ISN-060MFR	**071023**	P2B513-ISN-060MLR	**071989**	ISN 513-22213 FR	**744981**	ADPTR-IP-22213-60M
	2-3/16	**747940**	P2B513-ISN-203 FR	**747944**	P2B513-ISN-203 LR	**071989**	ISN 513-22213 FR	**064070**	ADPTR-ISN-22213-203
	2-1/4	**747941**	P2B513-ISN-204 FR	**747945**	P2B513-ISN-204 LR	**071989**	ISN 513-22213 FR	**064071**	ADPTR-ISN-22213-204
515	65 mm	**071007**	P2B515-ISN-065MFR	**071024**	P2B515-ISN-065MLR	**071990**	ISN 515-22215 FR	**744982**	ADPTR-IP-22215-65M
	2-7/16	**747948**	P2B515-ISN-207 FR	**747952**	P2B515-ISN-207 LR	**071990**	ISN 515-22215 FR	**064072**	ADPTR-ISN-22215-207
	2-1/2	**747949**	P2B515-ISN-208 FR	**747953**	P2B515-ISN-208 LR	**071990**	ISN 515-22215 FR	**064073**	ADPTR-ISN-22215-208
516	70 mm	**071008**	P2B516-ISN-070MFR	**071025**	P2B516-ISN-070MLR	**071991**	ISN 516/517-22215 FR	**744983**	ADPTR-IP-22215-70M
	2-11/16	**747956**	P2B516-ISN-211 FR	**747960**	P2B516-ISN-211 LR	**071991**	ISN 516/517-22215 FR	**069303**	ADPTR-IP-22215-211
	2-3/4	**747957**	P2B516-ISN-212 FR	**747961**	P2B516-ISN-212 LR	**071991**	ISN 516/517-22215 FR	**069304**	ADPTR-IP-22215-212
517	75 mm	**071009**	P2B517-ISN-075MFR	**071026**	P2B517-ISN-075MLR	**071991**	ISN 516/517-22215 FR	**744984**	ADPTR-IP-22215-75MM
	2-15/16	**747964**	P2B517-ISN-215 FR	**747968**	P2B517-ISN-215 LR	**071991**	ISN 516/517-22215 FR	**069305**	ADPTR-IP-22215-215
	3	**747965**	P2B517-ISN-300 FR	**747969**	P2B517-ISN-300 LR	**071991**	ISN 516/517-22215 FR	**069306**	ADPTR-IP-22215-300
518	80 mm	**071010**	P2B518-ISN-080MFR	**071027**	P2B518-ISN-080MLR	**071992**	ISN 518-22218 FR	**744985**	ADPTR-IP-22218-80M
	3-3/16	**747972**	P2B518-ISN-303 FR	**747976**	P2B518-ISN-303 LR	**071992**	ISN 518-22218 FR	**069307**	ADPTR-IP-22218-303
	3-1/4	**747973**	P2B518-ISN-304 FR	**747977**	P2B518-ISN-304 LR	**071992**	ISN 518-22218 FR	**069308**	ADPTR-IP-304
519	85 mm	**071011**	P2B519-ISN-085MFR	**071028**	P2B519-ISN-085MLR	**071993**	ISN 519-22218 FR	**744986**	ADPTR-IP-22218-85M
520	90 mm	**071012**	P2B520-ISN-090MFR	**071029**	P2B520-ISN-090MLR	**071994**	ISN 520-22220 FR	**744987**	ADPTR-IP-22220-090MM
	3-7/16	**747980**	P2B520-ISN-307 FR	**747984**	P2B520-ISN-307 LR	**071994**	ISN 520-22220 FR	**064074**	ADPTR-ISN-22220-307
	3-1/2	**747981**	P2B520-ISN-308 FR	**747985**	P2B520-ISN-308 LR	**071994**	ISN 520-22220 FR	**064075**	ADPTR-ISN-22220-308
522	100 mm	**071013**	P2B522-ISN-100MFR	**071030**	P2B522-ISN-100MLR	**071995**	ISN 522-22220 FR	**744988**	ADPTR-IP-22220-100MM
	3-15/16	**747988**	P2B522-ISN-315 FR	**747992**	P2B522-ISN-315 LR	**071995**	ISN 522-22220 FR	**069312**	ADPTR-IP-22220-315
	4	**747989**	P2B522-ISN-400 FR	**747993**	P2B522-ISN-400 LR	**071995**	ISN 522-22220 FR	**069313**	ADPTR-IP-22220-400
524	110 mm	**071014**	P2B524-ISN-110MFR	**071031**	P2B524-ISN-110MLR	**071996**	ISN 524-22222 FR	**744989**	ADPTR-IP-22222-110MM
526	115 mm	**071015**	P2B526-ISN-115MFR	**071032**	P2B526-ISN-115MLR	**071997**	ISN 526-22226 FR	**744990**	ADPTR-IP-22226-115MM
	4-7/16	**747996**	P2B526-ISN-407 FR	**748000**	P2B526-ISN-407 LR	**071997**	ISN 526-22226 FR	**064076**	ADPTR-ISN-22226-407
	4-1/2	**747997**	P2B526-ISN-408 FR	**748001**	P2B526-ISN-408 LR	**071997**	ISN 526-22226 FR	**064077**	ADPTR-ISN-22226-408
528	125 mm	**071016**	P2B528-ISN-125MFR	**071033**	P2B528-ISN-125MLR	**071998**	ISN 528-22226 FR	**744991**	ADPTR-IP-22226-125MM
	4-15/16	**748004**	P2B528-ISN-415 FR	**748008**	P2B528-ISN-415 LR	**071998**	ISN 528-22226 FR	**069316**	ADPTR-IP-22226-415
	5	**748005**	P2B528-ISN-500 FR	**748009**	P2B528-ISN-500 LR	**071998**	ISN 528-22226 FR	**069317**	ADPTR-IP-22226-500
530	135 mm	**071102**	P2B530-ISN-135MFR	**071103**	P2B530-ISN-135MLR			**071114**	ADPTR-IP-22228-135M
532	140	**071106**	P2B532-ISN-140MFR	**071107**	P2B532-ISN-140MLR			**071115**	ADPTR-IP-22230-140M

F = Non-Expansion, L = Expansion, R = Trident Rubbing Seal;. S = Labyrinth Seal

FEATURES/BENEFITS PAGE B16-3	NOMENCLATURE PAGE B16-6	SELECTION PAGE B16-12	DIMENSIONS PAGE B16-13

ISN DIMENSIONS

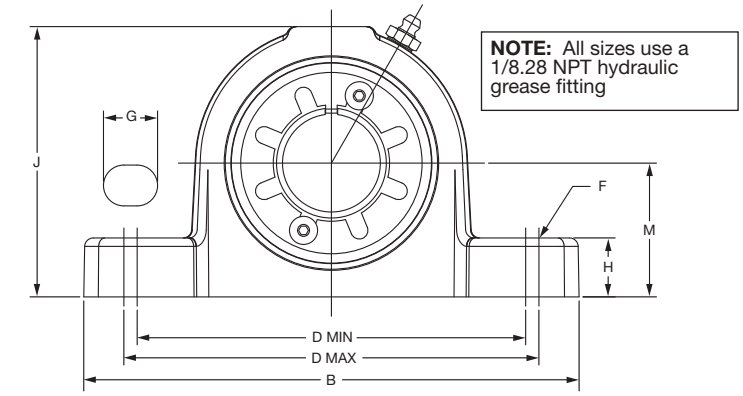

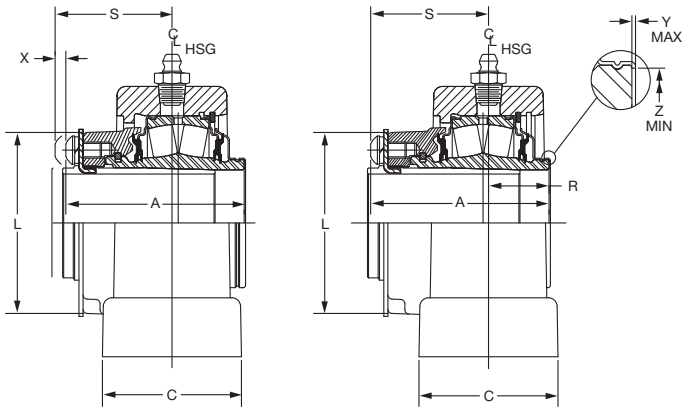

Series	Shaft Size mm	A	B	C	D Min	D Max	F Bolt Dia	G	H	J	L	M	R	S	X Total Expansion
507	30	66.7	184.9	52.0	145.0	155.0	M12	20.0	22.0	100.9	67.6	50.0	22.6	44.1	4.0
508	35	66.7	205.9	60.2	150.0	174.6	M12	27.3	25.0	110.8	67.6	60.0	22.6	44.1	4.0
509	40	71.4	206.3	60.2	155.0	174.6	M12	24.8	25.0	114.0	74.7	60.0	20.6	50.8	6.5
510	45	72.6	204.9	60.2	160.0	175.0	M12	22.5	25.0	113.8	81.0	60.0	21.8	50.8	6.5
511	50	72.6	253.9	70.2	190.0	215.9	M16	31.0	28.0	124.5	81.0	70.0	21.8	50.8	6.5
512	55	77.0	253.9	69.9	190.0	216.0	M16	31.0	30.0	130.3	87.1	70.0	23.0	54.0	7.0
513	60	86.9	274.9	80.2	205.0	235.0	M16	33.0	30.0	152.4	96.5	80.0	30.6	56.3	7.0
515	65	88.9	280.1	80.1	215.0	236.0	M16	28.5	30.0	156.0	106.7	80.0	31.4	57.5	7.0
516	70	88.9	315.9	90.2	244.5	268.3	M20	34.1	32.0	176.0	106.7	95.0	31.4	57.5	7.0
517	75														
518	80	106.0	345.3	110.3	270.0	293.7	M20	34.0	35.0	196.7	124.7	100.0	37.7	68.3	7.0
519	85	106.0	345.0	100.2	264.2	296.1	M20	37.9	35.0	205.2	124.7	112.0	37.7	68.3	7.0
520	90	120.0	379.8	110.2	292.8	327.0	M24	43.1	40.0	218.3	138.7	112.0	41.7	77.8	8.0
522	100	120.0	410.0	120.0	314.4	356.0	M24	46.8	45.0	239.0	138.7	125.0	41.7	77.8	8.0
524	110	133.0	410.0	120.0	314.5	356.0	M24	46.8	45.0	260.7	161.3	140.0	44.5	88.5	10.0
526	115	152.0	444.8	130.0	359.6	387.0	M24	41.7	50.0	292.8	191.8	150.0	48.4	103.6	10.0
528	125	152.0	500.0	150.2	400.0	427.0	M30	48.5	50.0	290.4	191.8	150.0	48.4	103.6	10.0
530	135	156.8	539.8	159.8	443.0	457.0	M30	42.0	60.0	312.5	222.2	160.0	51.8	105.0	16.3
532	140	179.8	560.0	160.0	463.0	477.0	M30	42.0	60.0	345.3	260.4	170.0	62.4	117.4	16.8

FEATURES/BENEFITS PAGE B16-3	NOMENCLATURE PAGE B16-6	SELECTION PAGE B16-12	DIMENSIONS PAGE B16-13

SELECTION

ISN PLUMMER BLOCKS WITH LABYRINTH SEALS

30 Through 140mm, 2-Bolt					
Series	**Ø Shaft**	**Part No.**	**Fixed Bearing Description**	**Part No.**	**Exp. Bearing Description**
507	30 mm	**071034**	P2B507-ISN-030MFS	**071051**	P2B507-ISN-030MLS
508	35 mm	**071035**	P2B508-ISN-035MFS	**071052**	P2B508-ISN-035MLS
509	40 mm	**071036**	P2B509-ISN-040MFS	**070053**	P2B509-ISN-040MLS
	1-1/2	**075154**	P2B509-ISN-108 FS		
510	45 mm	**071037**	P2B510-ISN-045MFS	**071054**	P2B510-ISN-045MLS
511	50 mm	**071038**	P2B511-ISN-050MFS	**071055**	P2B511-ISN-050MLS
512	55 mm	**071039**	P2B512-ISN-055MFS	**071056**	P2B512-ISN-055MLS
513	60 mm	**071040**	P2B513-ISN-060MFS	**071057**	P2B513-ISN-060MLS
	2-3/16	**077481**	P2B513-ISN-203 FS		
	2-1/2			**076670**	P2B513-ISN-208-LS
515	65 mm	**071041**	P2B515-ISN-065MFS	**071058**	P2B515-ISN-065MLS
	2-1/2	**074989**	P2B515-ISN-208 FS		
516	70 mm	**071042**	P2B516-ISN-070MFS	**071059**	P2B516-ISN-070MLS
517	7 mm	**071043**	P2B517-ISN-075MFS	**071060**	P2B517-ISN-075MLS
518	80 mm	**071044**	P2B518-ISN-080MFS	**071061**	P2B518-ISN-080MLS
519	8 5mm	**071045**	P2B519-ISN-085MFS	**071062**	P2B519-ISN-085MLS
520	90 mm	**071046**	P2B520-ISN-090MFS	**071063**	P2B520-ISN-090MLS
522	100 mm	**071047**	P2B522-ISN-100MFS	**071064**	P2B522-ISN-100MLS
524	110 mm	**071048**	P2B524-ISN-110MFS	**071065**	P2B524-ISN-110MLS
526	115 mm	**071049**	P2B526-ISN-115MFS	**071066**	P2B526-ISN-115MLS
528	125 mm	**071050**	P2B528-ISN-125MFS	**071067**	P2B528-ISN-125MLS
530	135 mm	**071104**	P2B530-ISN-135MFS	**071105**	P2B530-ISN-135MLS
532	140 mm	**071108**	P2B532-ISN-140MFS	**071109**	P2B532-ISN-140MLS

ISN PLUMMER BLOCK DIMENSIONS

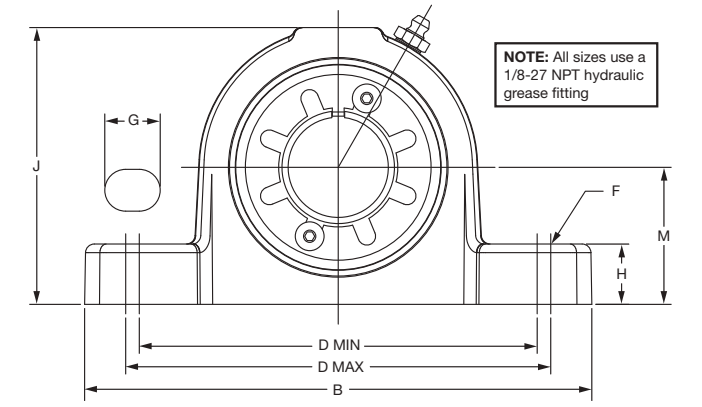

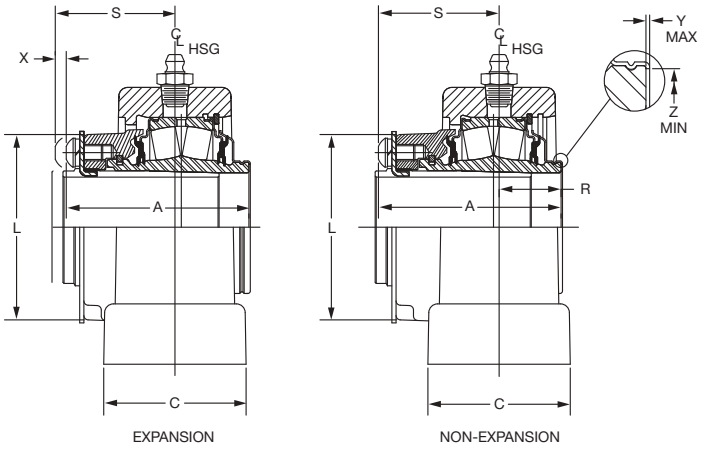

Series	Shaft Size mm	A	B	C	D Min	D Max	F Bolt Dia	G	H	J	L	M	R	S	X Total Expansion
507	30	66.7	184.9	52.0	145.0	155.0	M12	20.0	22.0	100.9	67.6	50.0	22.6	44.1	4.0
508	35	66.7	205.9	60.2	150.0	174.6	M12	27.3	25.0	110.8	67.6	60.0	22.6	44.1	4.0
509	40	71.4	206.3	60.2	155.0	174.6	M12	24.8	25.0	114.0	74.7	60.0	20.6	50.8	6.5
510	45	72.6	204.9	60.2	160.0	175.0	M12	22.5	25.0	113.8	81.0	60.0	21.8	50.8	6.5
511	50	72.6	253.9	70.2	190.0	215.9	M16	31.0	28.0	124.5	81.0	70.0	21.8	50.8	6.5
512	55	77.0	253.9	69.9	190.0	216.0	M16	31.0	30.0	130.3	87.1	70.0	23.0	54.0	7.0
513	60	86.9	274.9	80.2	205.0	235.0	M16	33.0	30.0	152.4	96.5	80.0	30.6	56.3	7.0
515	65	88.9	280.1	80.1	215.0	236.0	M16	28.5	30.0	156.0	106.7	80.0	31.4	57.5	7.0
516	70	88.9	315.9	90.2	244.5	268.3	M20	34.1	32.0	176.0	106.7	95.0	31.4	57.5	7.0
517	75														
518	80	106.0	345.3	100.3	270.0	293.7	M20	34.0	35.0	196.7	124.7	100.0	37.7	68.3	7.0
519	85	106.0	345.0	100.2	264.2	296.1	M20	37.9	35.0	205.2	124.7	112.0	37.7	68.3	7.0
520	90	120.0	379.8	110.2	292.8	327.0	M24	43.1	40.0	218.3	138.7	112.0	41.7	77.8	8.0
522	100	120.0	410.0	120.0	314.4	356.0	M24	46.8	45.0	239.0	138.7	125.0	41.7	77.8	8.0
524	110	133.0	410.0	120.0	314.5	356.0	M24	46.8	45.0	260.7	161.3	140.0	44.5	88.5	10.0
526	115	152.0	444.8	130.0	359.6	387.0	M24	41.7	50.0	292.8	191.8	150.0	48.4	103.6	10.0
528	125	152.0	500.0	150.2	400.0	427.0	M30	48.5	50.0	290.4	191.8	150.0	48.4	103.6	10.0
530	135	156.8	539.8	159.8	443.0	457.0	M30	42.0	60.0	312.5	222.2	160.0	51.8	105.0	16.3
532	140	179.8	560.0	160.0	463.0	477.0	M30	42.0	60.0	345.3	260.4	170.0	62.4	117.4	16.8

FEATURES/BENEFITS PAGE B16-3	NOMENCLATURE PAGE B16-6	SELECTION PAGE B16-12	DIMENSIONS PAGE B16-13

DIMENSIONS

ISN BEARING INSERTS

Metric Sizes 30-170 mm

CONTACT SEAL

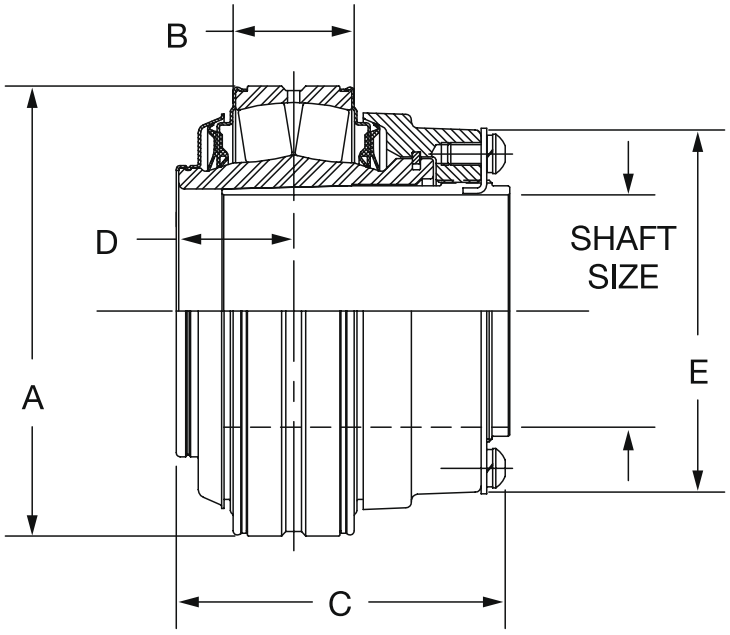

LABYRINTH SEAL

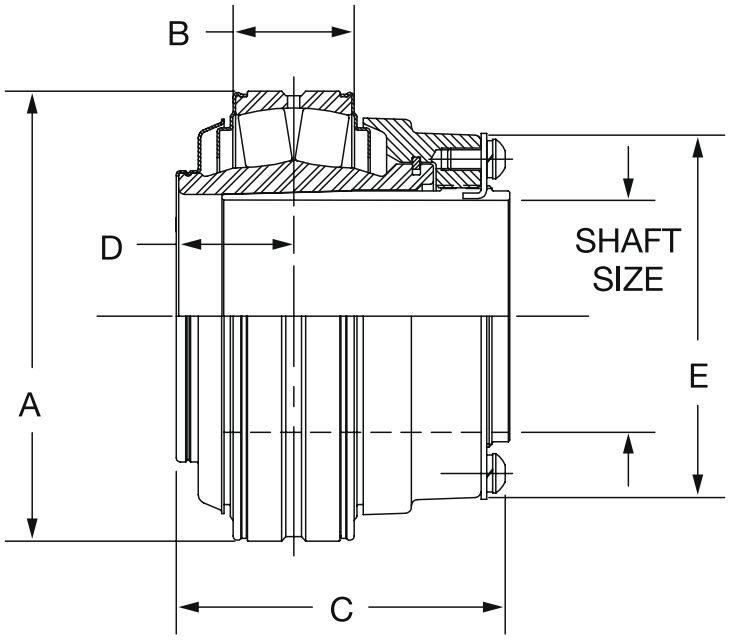

ISN BEARING INSERTS
Metric Sizes 30-170 mm

Shaft Size mm	Contact Seal		Labyrinth Seal		Dimensions in mm				
	Part Number	Description	Part Number	Description	A	B	C	D	E
30	**071068**	INS-ISN-30MR	**071085**	INS-ISN-30MS	80.0	24.0	66.7	24.6	67.6
35	**071069**	INS-ISN-35MR	**071086**	INS-ISN-35MS					
40	**071070**	INS-ISN-40MR	**071087**	INS-ISN-40MS	85.0	24.0	71.4	24.2	74.7
45	**071071**	INS-ISN-45MR	**071088**	INS-ISN-45MS	90.0	24.0	72.6	24.8	81.0
50	**071072**	INS-ISN-50MR	**071089**	INS-ISN-50MS					
55	**071073**	INS-ISN-55MR	**071090**	INS-ISN-55MS	100.0	26.3	77.0	26.7	87.1
60	**071074**	INS-ISN-60MR	**071091**	INS-ISN-60MS	120.0	32.3	86.9	30.7	96.5
65	**071075**	INS-ISN-65MR	**071092**	INS-ISN-65MS	130.0	32.3	88.9	31.0	106.7
70	**071076**	INS-ISN-70MR	**071093**	INS-ISN-70MS					
75	**071077**	INS-ISN-75MR	**071094**	INS-ISN-75MS					
80	**071078**	INS-ISN-80MR	**071095**	INS-ISN-80MS	160.0	41.3	106.3	37.7	124.7
85	**071079**	INS-ISN-85MR	**071096**	INS-ISN-85MS					
90	**071080**	INS-ISN-90MR	**071097**	INS-ISN-90MS	180.0	47.3	120.0	41.8	138.7
100	**071081**	INS-ISN-100MR	**071098**	INS-ISN-100MS					
110	**071082**	INS-ISN-110MR	**071099**	INS-ISN-110MS	200.0	54.8	133.0	49.1	161.3
115	**071083**	INS-ISN-115MR	**071100**	INS-ISN-115MS	230.0	65.8	152.0	53.5	191.8
125	**071084**	INS-ISN-125MR	**071101**	INS-ISN-125MS					
135	**071116**	INS-ISN-135MR	**071117**	INS-ISN-135MS	250.0	69.9	156.8	59.4	222.2
140	**071118**	INS-ISN-140MR	**071119**	INS-ISN-140MS	290.0	81.8	179.8	70.3	260.4
150	**079991**	INS-ISN-150MR	—	—					
160	**079992**	INS-ISN-160MR	—	—	320.0	88.1	187.7	72.7	289.7
170	**079993**	INS-ISN-170MR	—	—					

FEATURES/BENEFITS PAGE B16-3	NOMENCLATURE PAGE B16-6	SELECTION PAGE B16-12	DIMENSIONS PAGE B16-16

DIMENSIONS

ISNX Pillow Block Hydraulic

Table 5: Spherical Roller Bearings

Shaft Size Adapter Mounted Inches	Bearing Series	e	$F_A/F_R \le e$		$F_A/F_R > e$		Adapter Maximum Allowable Thrust Load kN †	Dynamic Capacity (C) kN	Static Capacity (Co) kN	Maximum RPM
			X	Y	X	Y				
23100K Series										
150 mm	23134K	.28	1	2.40	.67	3.50	45	1032	1668	1300
160 mm	23136K	.29	1	2.30	.67	3.50	52	1201	1913	1200
170 mm	23138K	.30	1	2.30	.67	3.40	59	1357	2180	1100
180 mm	23140K	.35	1	2.00	.67	2.90	67	1335	2269	900
200 mm	23144K	.33	1	2.00	.67	3.00	79	1624	2914	800
220 mm	23148K	.33	1	2.10	.67	3.10	92	1846	3269	750
9-7/16 9-1/2 240 mm	23152K	.33	1	2.00	.67	3.00	89	2180	4003	670
10-7/16 10-1/2 260 mm	23156K	.32	1	2.10	.67	3.20	123	2358	4359	630
10-15/16 11 280 mm	23160K	.33	1	2.10	.67	3.10	144	2669	4938	600
11-15/16 12 300 mm	23164K	.34	1	2.00	.67	2.90	169	3203	5961	530
12-7/16 12-1/2 320 mm	23168K	.34	1	2.00	.67	2.90	194	3692	6939	500
13-7/16 13-1/2 340 mm	23172K	.33	1	2.10	.67	3.10	203	3781	7384	480
13-15/16 14 360 mm	23176K	.32	1	2.10	.67	3.20	221	4070	8140	450

If the thrust load exceeds adapter maximum allowable thrust load, auxiliary methods of carrying thrust are required.

23100K series bearings will be provided with metric housings only.

DODGE

ISNX Large-Bore Hydraulic Assist Spherical Roller Bearing Selection

Table 6: ISNX Large-Bore Hydraulic Assist Spherical Roller Bearings Selection Table

Shaft Size	Housing Designation	Bearing Series	Max RPM Grease Life	L10 Hours	Allowable Equivalent Radial Load Rating (kN) AT VARIOUS RPM													
					50	100	150	200	250	300	400	500	550	600	650	700	750	950	1300
23100K Series																			
150 mm	3134	23134K	1300	50,000	230	186	165	151	142	134	123	115	112	109	106	104	102	95	86
				80,000	199	162	143	132	123	116	107	200	97	95	92	90	88	82	75
				100,000	186	151	134	123	115	109	100	93	91	88	86	84	83	77	70
160 mm	3136	23136K	1200	50,000	267	217	192	176	165	156	143	134	130	127	124	121	119	110	101
				80,000	232	188	167	153	143	136	124	116	113	110	107	105	103	96	87
				100,000	217	176	156	143	134	127	116	109	106	103	101	98	96	90	82
170 mm	3138	23138K	1100	50,000	302	245	217	199	186	176	162	151	147	143	140	137	134	125	114
				80,000	262	213	188	173	162	153	140	131	128	124	121	119	116	108	99
				100,000	245	199	176	162	151	143	131	123	119	116	114	111	109	101	92
180 mm	3140	23140K	900	50,000	297	241	213	196	183	173	159	149	145	141	137	134	132	123	
				80,000	258	209	185	170	159	151	138	129	126	122	119	117	114	107	
				100,000	241	196	173	159	149	141	129	121	117	114	112	109	107	100	
200 mm	3144	23144K	800	50,000	361	293	260	238	223	211	194	181	176	171	167	164	160		
				80,000	314	255	226	207	194	183	168	157	153	149	145	142	139		
				100,000	293	238	211	194	181	171	157	147	143	139	136	133	130		
220 mm	3148	23148K	750	50,000	411	334	295	271	253	240	220	206	200	195	190	186	182		
				80,000	357	290	256	235	220	208	191	179	174	169	165	162	158		
				100,000	334	271	240	220	206	195	179	167	162	158	154	151	148		
9-7/16	3152	23152K	670	50,000	485	394	349	320	299	283	260	243	236	230	225	220	215		
9-1/2				80,000	421	342	303	278	260	246	226	211	205	200	195	191	187		
240 mm				100,000	394	320	283	260	243	230	211	197	192	187	182	178	175		
10-7/16	3156	23156K	630	50,000	524	426	377	346	324	306	281	263	255	249	243	238	233		
10-1/2				80,000	455	370	328	300	281	266	244	228	222	216	211	206	202		
260 mm				100,000	426	346	297	281	263	249	228	213	207	202	197	193	189		
10-15/16	3160	23160K	600	50,000	594	482	427	392	366	347	318	298	289	282	275	269	263		
11				80,000	419	419	371	340	318	301	276	258	251	245	239	234	229		
280 mm				100,000	482	392	347	318	298	282	258	242	235	229	223	218	205		
11-15/16	3164	23164K	530	50,000	712	579	512	470	440	416	382	357	347	338	330				
12				60,000	619	503	445	408	382	361	332	310	301	294	287				
300 mm				100,000	579	470	416	382	268	338	310	390	282	275	268				
12-7/16	3168	23168K	500	50,000	821	667	591	542	507	480	440	412	400	301					
12-1/2				80,000	713	579	513	471	440	417	382	357	347	338					
320 mm				100,000	667	542	480	431	412	390	357	334	325	316					
13-7/16	3172	23172K	480	50,000	841	683	605	555	519	491	451	421	410	399					
13-1/2				80,000	730	593	525	482	451	427	391	277	356	347					
340 mm				100,000	683	555	491	451	421	310	366	342	333	323					
13-15/16	3176	23176K	450	50,000	905	735	651	597	559	529	485	454	441						
14				80,000	786	639	565	519	485	459	421	394	383						
360 mm				100,000	735	597	529	485	454	430	394	368	358						

DIMENSIONS

ISNX HYD
LARGE BORE SN DIMENSION PLUMMER BLOCKS

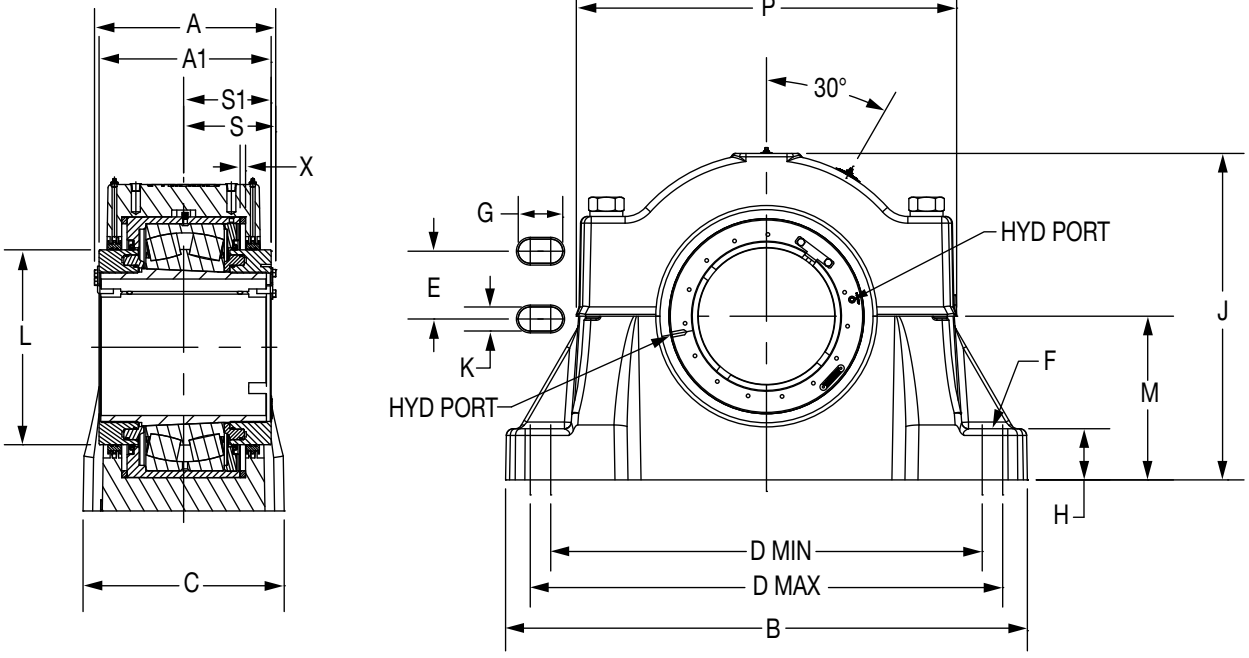

Housing Designation	Bearing Series	Shaft Size	Part Number	Description	Insert Number
3134	23134K	150mm	**072919**	P4B134-ISNX-150MR HYD	**072895**
3136	23136K	160mm	**072920**	P4B136-ISNX-160MR HYD	**072896**
3138	23138K	170mm	**072921**	P4B138-ISNX-170MR HYD	**072897**
3140	23140K	180mm	**072922**	P4B140-ISNX-180MR HYD	**072898**
3144	23144K	200mm	**072923**	P4B144-ISNX-200MR HYD	**072899**
3148	23148K	220mm	**072924**	P4B148-ISNX-220MR HYD	**072900**
3152	23152K	240mm	**072912**	P4B152-ISNX-240MR HYD	**072901**
3156	23156K	260mm	**072913**	P4B156-ISNX-260MR HYD	**072902**
3160	23160K	280mm	**072914**	P4B160-ISNX-280MR HYD	**072903**
3164	23164K	300mm	**072915**	P4B164-ISNX-300MR HYD	**072904**
3168	23168K	320mm	**072916**	P4B168-ISNX-320MR HYD	**072905**
3172	23172K	340mm	**072917**	P4B172-ISNX-340MR HYD	**072906**
3176	23176K	360mm	**072918**	P4B176-ISNX-360MR HYD	**072907**

ISN LOCKPLATE KITS

Size	Part No.
30	**048925**
35	**048925**
40	**048926**
45	**048927**
50	**048927**
55	**048928**
60	**048929**
65	**048930**
70	**048930**
75	**048930**
80	**048931**
85	**048931**
90	**048932**
100	**048932**
110	**048933**
115	**048934**
125	**048934**
135	- - -
140	- - -

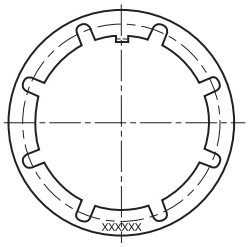

Kit consists of:
1 Lockplate
2 Socket head capscrews
2 Lockwashers

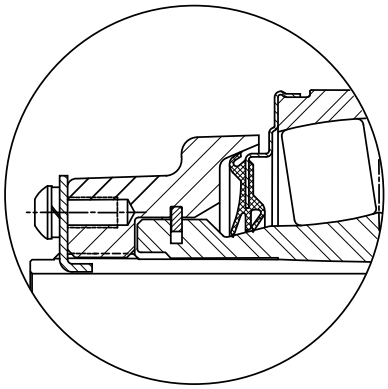

ISN END COVER

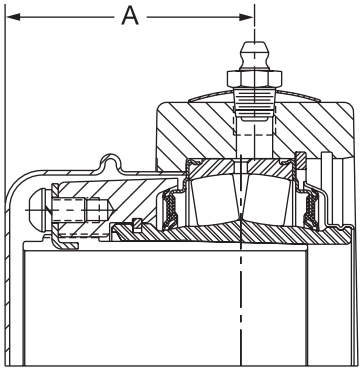

Plummer Block

Housing Series	Bore Size	Front Side Closed Cover		Front Side Open Cover		Back Side Open Cover		A Dimensions in mm
		Part Number	Description	Part Number	Description	Part Number	Description	
507	30	**069960**	IPEC08	**070251**	IPEC0-08-30mm	**070620**	IPBEC0-08-30mm	49.5
508	35	**069960**	IPEC08	**070252**	IPEC0-08-35mm	**070621**	IPBEC0-08-35mm	49.5
509	40	**069961**	IPEC09	**070253**	IPEC0-09-40mm	**070622**	IPBEC0-09-40mm	55.0
510	45	**069962**	IPEC10	**070254**	IPEC0-10-45mm	**070623**	IPBEC0-10-45mm	58.3
511	50	**069962**	IPEC10	**070255**	IPEC0-10-50mm	**070624**	IPBEC0-10-50mm	58.3
512	55	**069963**	IPEC11	**070256**	IPEC0-11-55mm	**070625**	IPBEC0-11-55mm	61.7
513	60	**069964**	IPEC13	**070257**	IPEC0-13-60mm	**070626**	IPBEC0-13-60mm	66.3
515	65	**069965**	IPEC15	**070258**	IPEC0-15-65mm	**070627**	IPBEC0-15-65mm	70.0
516	70	**069965**	IPEC15	**070259**	IPEC0-15-70mm	**070628**	IPBEC0-15-70mm	70.0
517	75	**069965**	IPEC15	**070260**	IPEC0-15-75mm	**070629**	IPBEC0-15-75mm	70.0
518	80	**069966**	S2IPEC18	**070261**	IPEC0-18-80mm	**070630**	IPBEC0-18-80mm	78.3
519	85	**069966**	S2IPEC18	**070262**	IPEC0-18-85mm	**070631**	IPBEC0-18-85mm	78.3
520	90	**069967**	S2IPEC20	**070263**	IPEC0-20-90mm	**070632**	IPBEC0-20-90mm	91.2
522	100	**069967**	S2IPEC20	**070264**	IPEC0-20-100mm	**070633**	IPBEC0-20-100mm	91.2
524	110	**069968**	S2IPEC22	**070265**	IPEC0-22-110mm	**070634**	IPBEC0-22-110mm	97.7
526	115	**069969**	S2IPEC26	**070266**	IPEC0-29-115mm	**070635**	IPBEC0-29-115mm	111.4
528	125	**069969**	S2IPEC26	**070267**	IPEC0-26-125mm	**070636**	IPBEC0-26-125mm	111.4
530	135	**069983**	IPEC28					125.2
532	140	**069984**	IPEC30					143.2

DIMENSIONS

IMPERIAL SPANNER

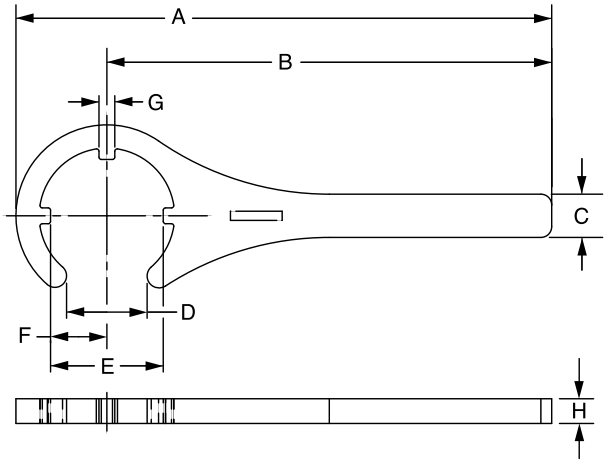

Dimensions *mm*/inch

Shaft Size mm	Shaft Size Inch	Part No.	A	B	C	D	E	F	G	N	Housing Series
30 thru 35	1-1/8 thru 1-1/2	**066629**	10.84 *275.3*	9.00 *228.6*	0.88 *22.4*	1.63 *41.4*	2.28 *57.9*	1.14 *29.0*	0.32 *8.1*	0.50 *12.7*	507 thru 508
40	1-5/8 thru 1-3/4	**066630**	11.04 *280.4*	9.00 *228.6*	0.88 *22.4*	1.88 *47.8*	2.48 *63.0*	1.24 *31.5*	0.32 *8.1*	0.50 *12.7*	509
45 thru 50	1-7/8 thru 2	**066631**	11.20 *284.5*	9.00 *228.6*	0.88 *22.4*	2.13 *54.1*	2.73 *69.2*	1.36 *34.5*	0.32 *8.1*	0.50 *12.7*	510
55	2-1/8	**066632**	12.38 *314.5*	10.00 *254.0*	0.88 *22.4*	2.38 *60.5*	2.98 *75.7*	1.49 *37.8*	0.44 *11.2*	0.50 *12.7*	512
60	2-3/16 thru 2-1/4	**066633**	12.63 *320.8*	10.00 *254.0*	1.31 *33.3*	2.63 *66.8*	3.40 *86.4*	1.70 *43.2*	0.44 *11.2*	0.50 *12.7*	513
60 70 75	2-7/16 thru 3	**066634**	16.90 *429.3*	14.00 *355.6*	1.31 *33.3*	3.13 *79.5*	3.80 *96.5*	1.90 *48.3*	044 *11.2*	0.50 *12.7*	515 516 517
80 thru 85	3-3/16 thru 3-1/4	**066635**	17.39 *441.7*	14.00 *355.6*	1.31 *33.3*	3.63 *92.2*	4.36 *110.7*	2.18 *55.4*	0.44 *11.2*	0.50 *12.7*	518 thru 519
90 thru 100	3-7/16 thru 4	**066636**	17.75 *450.9*	14.00 *355.6*	1.75 *44.5*	4.13 *104.9*	4.91 *124.7*	2.46 *62.5*	0.44 *11.2*	0.50 *12.7*	520 thru 522
110		**066637**	20.36 *517.1*	16.00 *406.4*	1.75 *44.5*	4.63 *117.6*	5.68 *144.3*	2.84 *72.1*	0.44 *11.2*	0.50 *12.7*	524
115 thru 125	4-7/16 thru 5	**066638**	25.17 *639.3*	20.00 *508.0*	2.00 *50.8*	5.13 *130.3*	6.88 *174.8*	3.44 *87.4*	0.44 *11.2*	0.50 *12.7*	526 thru 528
135	5-7/16 thru 5-1/2	**066642**	27.82 *706.6*	22.00 *558.8*	2.00 *50.8*	5.63 *143.0*	8.05 *204.5*	4.03 *102.4*	0.69 *4.8*	0.50 *12.7*	530
140	5-15/16 thru 6	**066643**	28.75 *730.3*	22.00 *558.8*	2.00 *50.8*	6.13 *155.7*	9.13 *231.9*	4.57 *116.1*	0.75 *19.1*	0.50 *12.7*	536

FEATURES/BENEFITS

SNX™
HOUSINGS OF CAST IRON GG25

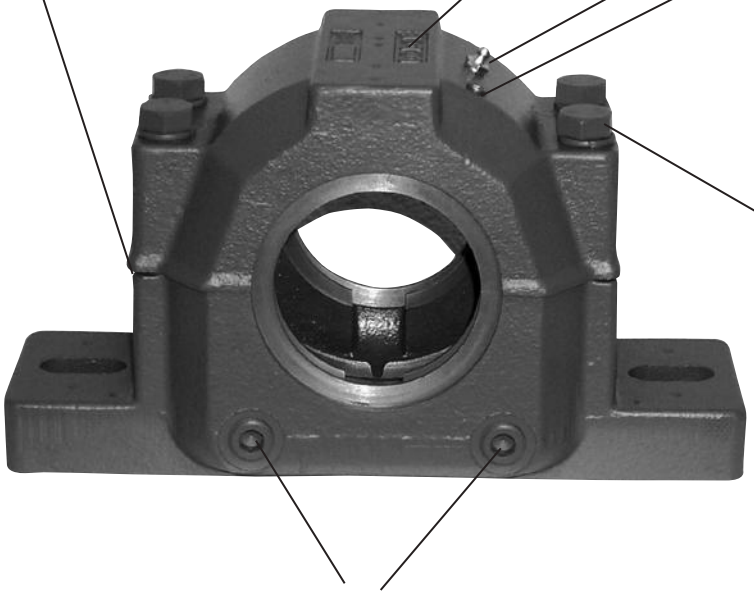



Stronger feet for extra load capacity

FEATURES/BENEFITS

SNX



Oil equalization passage: allows oil flow from side to side



Extra capacity oil sump: lowers operating temperature

Standard SNX housings are suitable for either oil or grease lubrication

Seal options: Felt, V-Ring, LD, TS and TT Seals in the 200 and 500 Series



Oil sight gauge & breather kit available



Oil return slots: prevent leaking

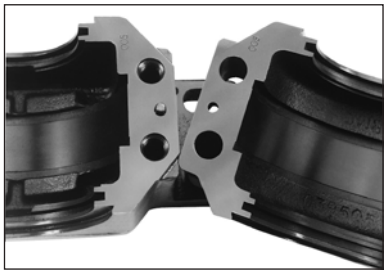

Offset dowels and match mark: allows matching of cap to corresponding base

DODGE® SDX™ and SDXD™
HOUSINGS OF GREY CAST IRON GG25 (SDX) OR SPHEROIDAL DUCTILE IRON GGG40 (SDXD)

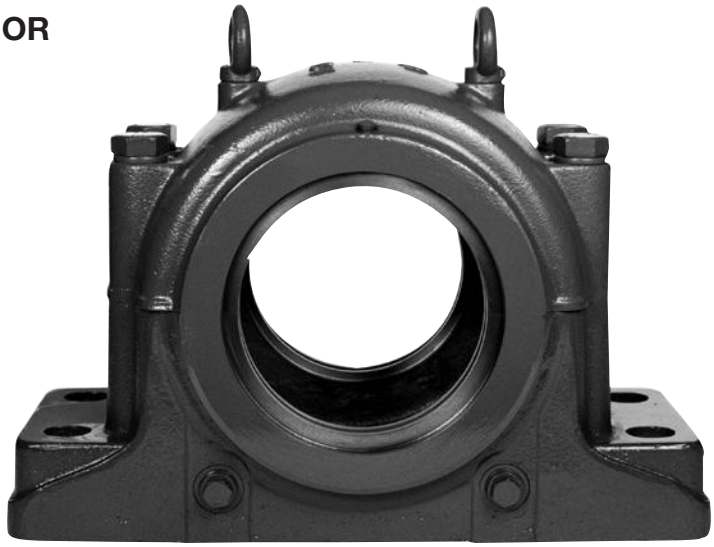

SD dimensioned housing with extra capability

- Size Range 3040 to 3068, 3134 to 3164
- Available in cast iron (GG25-SDX) and spheroidal ductile iron (GGG40-SDXD) from stock
- Accepts 23000K & 23100K spherical bearings
- Drilled and tapped grease hole with grease fitting
- TS labyrinth seal standard
- AUX (auxiliary) seal optional – Allows for relubrication of the seal area
- Pre-drilled with grease hole & fitting over seal groove

SNX SEALS
ONE HOUSING – MANY SEALS

FS
Felt Seal: Standard
SNX 209 - SNX 232
SNX 3028 - SNX 3038

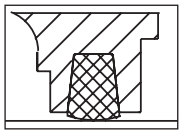

SK FS
Felt strip
SNX 509 - SNX 532
SNX 308/608 - SNX 320/620

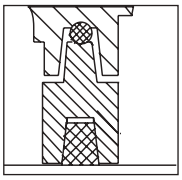

TS - SNX
Labyrinth seal
SNX 209/509 -
SNX 232/532

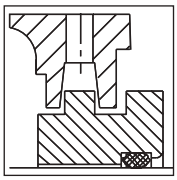

VR
Felt strip with V-ring seal
SNX 209 - SNX 232
SNX 3024 - SNX 3038

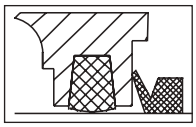

SK VR
Felt strip with V-ring seal
SNX 509 - SNX 532
SNX 308/608 - SNX 320/620

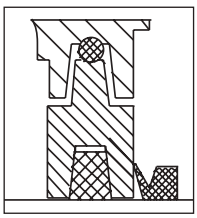

TT - SNX
Triple-Tect
SNX 209/509 -
SNX 232/532

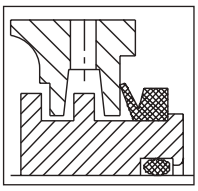

LD
Split two lip radial seal
SNX 209 - SNX 224
SNX 3028 - SNX 3032

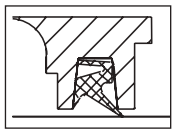

SK LD
Split two lip radial seal
SNX 509 - SNX 532
SNX 608 - SNX 620

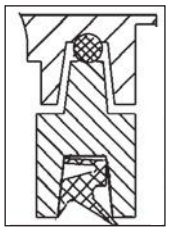

DK
End cover
SNX 209/509 - SNX 232/532
SNX 308/608 - SNX 320/620
SNX 3028 - SNX 3038

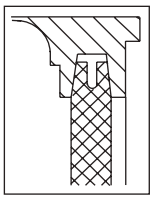

SDX / SDXD SEALS

TS - SDX / SDXD
Labyrinth Seal: Standard
SDX 3040 - SDX 3068
SDX 3134 - SDX 3164
SDXD 3040 - SDXD 3068
SDXD 3134 - SDXD 3164

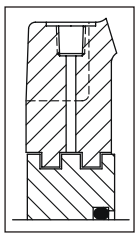

EC
End Cover
SDX 3040 - SDX 3068
SDX 3134 - SDX 3068
SDXD 3040 - SDXD 3068
SDXD 3134 - SDXD 3164

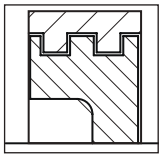

AUX - SDX / SDXD
Auxiliary Seal: Optional
SDX 3040 - SDX 3068
SDX 3134 - SDX 3164
SDXD 3040 - SDXD 3068
SDXD 3134 - SDXD 3164

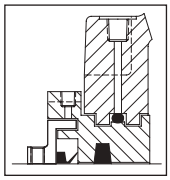

Seal Operating Limits

	FS	LD	VR & TT	TS	DK
Max. circumferential speeds	4 m/s	8 m/s	4 m/s	brg. RPM limit	-
Max temperature	80-90°C	100-110°C	100-110°C	100-110°C	100-110°C

DIMENSIONS

SNX 200 - TS/TT

Plummer Blocks for bearings 22200, 23200

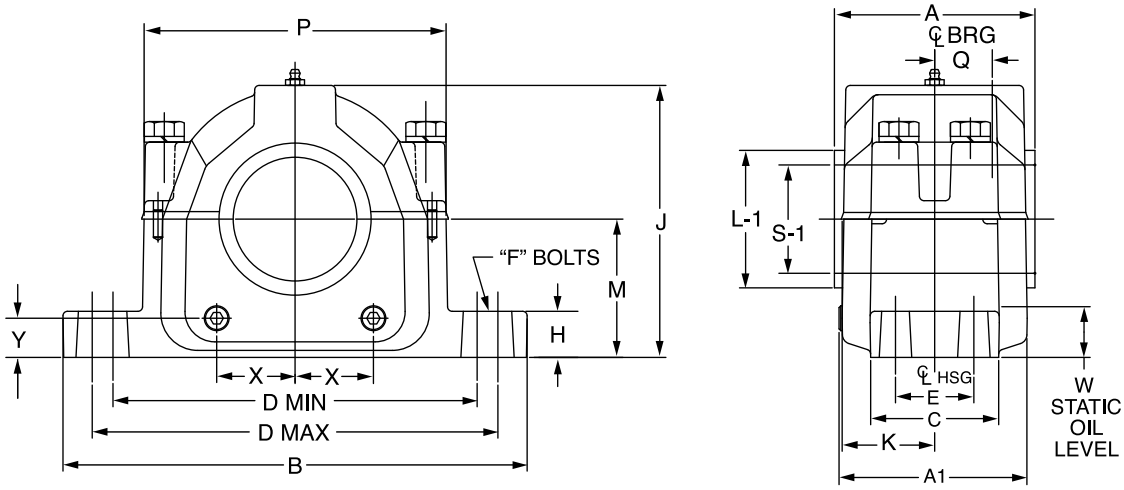

Housing GG*		Labyrinth seal		Triple-Tect seal	
Description	**Part No.**	**Description**	**Part No.**	**Description**	**Part No.**
SNX 209 - TS/TT	**747199**	TS 209	**747234**	TT 209	**747217**
SNX 210 - TS/TT	**747201**	TS 210	**747235**	TT 210	**747218**
SNX 211 - TS/TT	**747202**	TS 211	**747236**	TT 211	**747219**
SNX 212 - TS/TT	**747203**	TS 212	**747237**	TT 212	**747220**
SNX 213 - TS/TT	**747204**	TS 213	**747238**	TT 213	**747221**
SNX 215 - TS/TT	**747205**	TS 215	**747239**	TT 215	**747222**
SNX 216 - TS/TT	**747206**	TS 216	**747240**	TT 216	**747223**
SNX 217 - TS/TT	**747207**	TS 217	**747241**	TT 217	**747224**
SNX 218 - TS/TT	**747208**	TS 218	**747242**	TT 218	**747225**
SNX 219 - TS/TT	**747209**	TS 219	**747243**	TT 219	**747226**
SNX 220 - TS/TT	**747210**	TS 220	**747244**	TT 220	**747227**
SNX 222 - TS/TT	**747211**	TS 222	**747245**	TT 222	**747228**
SNX 224 - TS/TT	**747212**	TS 224	**747246**	TT 224	**747229**
SNX 226 - TS/TT	**747213**	TS 226	**747247**	TT 226	**747230**
SNX 228 - TS/TT	**747214**	TS 228	**747248**	TT 228	**747231**
SNX 230 - TS/TT	**747215**	TS 230	**747249**	TT 230	**747232**
SNX 232 - TS/TT	**747216**	TS 232	**747250**	TT 232	**747233**

* Housings are for use with TS or TT seals only

SNX 200 - TS/TT

Plummer Blocks for bearings 22200, 23200

Dimensions in mm				
Description	kg	A (WITH SEALS)*		L-1
		TS	TT	
SNX 209 TS/TT	4.3	91	91	59
SNX 210 TS/TT	5.1	95	95	64
SNX 211 TS/TT	7.1	100	100	68
SNX 212 TS/TT	9.5	112	112	75
SNX 213 TS/TT	9.7	110	110	79
SNX 215 TS/TT	11.3	117	117	88
SNX 216 TS/TT	12.7	123	123	93
SNX 217 TS/TT	15.7	125	125	97
SNX 218 TS/TT	16.7	144	144	102
SNX 219 TS/TT	27.0	150	150	113
SNX 220 TS/TT	27.8	160	160	113
SNX 222 TS/TT	35.8	168	168	131
SNX 224 TS/TT	41.1	185	185	131
SNX 226 TS/TT	55.2	191	191	140
SNX 228 TS/TT	69.0	203	203	160
SNX 230 TS/TT	77.3	220	220	400
SNX 232 TS/TT	99.9	235	235	400

All other dimensions on page B7- 15

Housings are for use with TS or TT seals only

DIMENSIONS

SNX 200 - LD/FS/DK

Plummer Blocks for bearings 22200, 23200

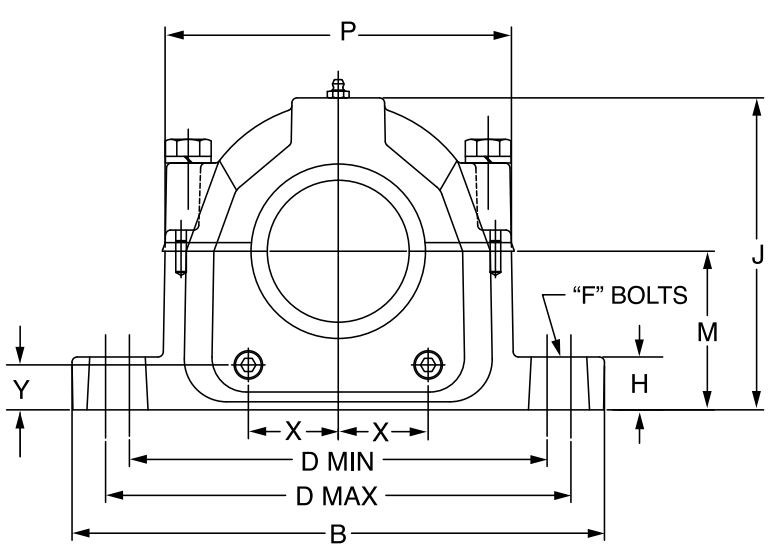

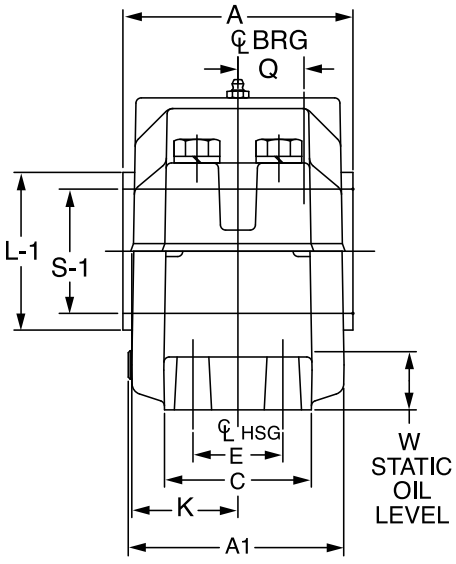

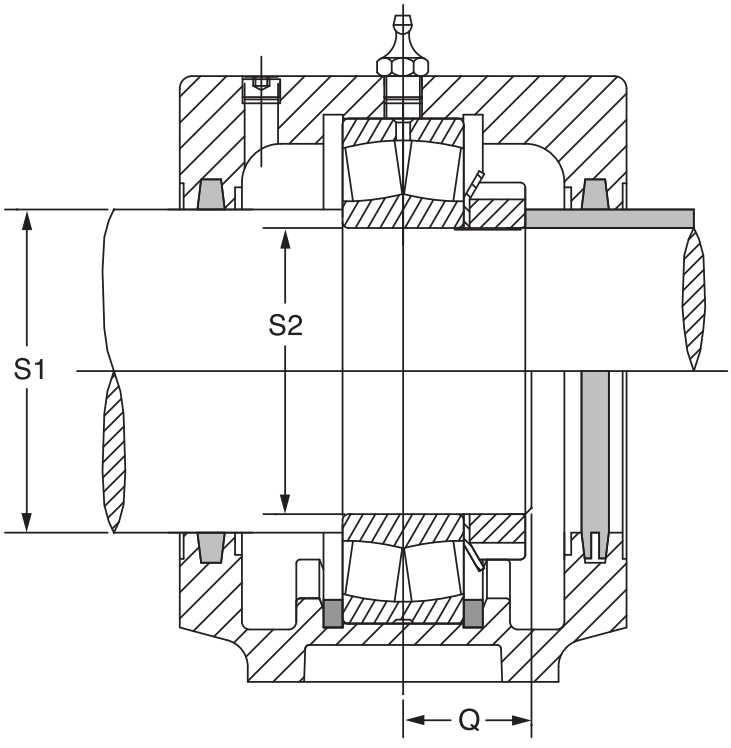

FEATURES/BENEFITS PAGE B16-23	NOMENCLATURE PAGE B16-6	SELECTION PAGE B16-26	DIMENSIONS PAGE B16-26

DIMENSIONS

SNX 200 - LD/FS/DK

Dimensions in mm

Description	kg	Shaft Size S-1	Shaft Size S-2	A1	B	C	D Min	D Max	F Bolt Dia Bolzen	H	J	K	M	P	Q	W Static Oil Level	X	Y	A (With Seals) LD	A (With Seals) Felt FS	A (With Seals) End Cover DK	TS	VR	L-1
SNX 209	4.3	55	45	94	210	60	159	178	M12	25	112	45	60	124	11.5	24.0	29	20	91	91	91	99	100	59
SNX 210	5.1	60	50	99	210	60	165	178	M12	23	113	48	60	130	11.5	29.0	31	17	95	95	95	103	105	64
SNX 211	7.1	65	55	104	244	70	187	210	M16	26	133	50	70	147	12.5	28.5	33	22	100	100	100	108	110	68
SNX 212	9.5	70	60	116	270	70	197	230	M16	29	139	56	70	156	14.0	32.0	38	20	112	112	112	119	125	75
SNX 213	9.7	75	65	113	279	80	206	241	M16	30	155	55	80	165	15.5	27.0	41	25	110	110	110	121	123	79
SNX 215	11.3	85	75	121	283	80	219	245	M16	29	161	59	80	179	15.5	38.0	44	21	117	117	117	126	128	88
SNX 216	12.7	90	80	127	320	90	245	279	M20	33	178	62	95	202	16.5	34.5	49	31	123	123	123	134	136	93
SNX 217	15.7	95	85	132	320	90	251	279	M20	32	187	63	95	208	18.0	35.5	53	28	125	125	125	137	139	97
SNX 218	16.7	100	90	151	346	98	260	299	M20	35	195	72	100	220	20.0	47.0	57	28	144	144	144	155	157	102
SNX 219	27.0	110	95	156	360	98	276	314	M20	35	214	75	112	229	21.5	39.5	60	35	150	150	150	161	165	113
SNX 220	27.8	115	100	164	390	110	295	333	M24	40	220	80	112	248	23.0	45.0	67	30	160	160	160	169	174	113
SNX 222	35.8	125	110	174	419	121	324	364	M24	45	239	84	125	269	26.5	53.5	73	34	168	168	168	175	180	131
SNX 224	41.1	135	120	191	419	120	337	368	M24	45	267	93	140	286	29.0	57.0	81	42	185	185	185	195	199	131
SNX 226	55.2	145	130	197	445	130	374	387	M24	50	290	95	150	315	32.0	49.0	84	39	191	191	191	200	204	140
SNX 228	69.0	155	140	210	500	150	400	420	M30	50	298	102	150	337	34.0	51.5	92	35	203	203	203	211	218	160
SNX 230	77.3	165	150	226	530	160	443	457	M30	60	317	110	160	364	36.5	53.0	91	34	220	220	220	230	237	400
SNX 232	99.9	175	160	241	550	160	457	483	M30	60	338	118	170	379	40.0	53.2	102	34	235	235	235	243	250	400

SELECTION

SNX 200 - LD/FS/DK

	Housing GG		LD Seal		FS Seal		VR Seal		DK End Cover	
Description	**Description**	**Part No.**	**Description**	**Part No.**	**Description**	**Part No.**	**Description**	**Part No.**	**Description**	**Part No.**
SNX 209	SNX 209/509	**747025**	LD 55	**725357**	6.5X8X200	**713600**	VS0055	**738145**	DK 55	**709137**
SNX 210	SNX 210/510/308/608	**747026**	LD 60	**725358**	6.5X8X230	**713616**	VS0060	**738146**	DK 60	**709140**
SNX 211	SNX 211/511/309/609	**747027**	LD 65	**725359**	6.5X8X230	**713616**	VS0065	**738147**	DK 65	**709143**
SNX 212	SNX 212/512/310/610	**747028**	LD 70	**725360**	7.5X9X260	**713633**	VS0070	**738148**	DK 70	**709146**
SNX 213	SNX 213/513/311/611	**747029**	LD 75	**725361**	7.5X9X260	**713633**	VS0075	**738149**	DK 75	**709152**
SNX 215	SNX 215/515/312/612	**747030**	LD 85	**725363**	7.5X9X155	**713571**	VS0085	**738151**	DK 85	**709162**
SNX 216	SNX 216/516/313/613	**747031**	LD 90	**725364**	8.5X10X165	**713579**	VS0090	**738152**	DK 90	**709166**
SNX 217	SNX 217/517/314	**747032**	LD 95	**725366**	8.5X10X175	**713586**	VS0095	**738154**	DK 90	**709166**
SNX 218	SNX 218/518/315/615	**747033**	LD 100	**725341**	10X12X185	**713588**	VS0100	**738155**	DK 100	**708959**
SNX 219	SNX 219/519/316/616	**747034**	LD 110	**725342**	10X12X200	**713596**	VS0110	**738157**	DK 110	**708966**
SNX 220	SNX 220/520/317/617	**747035**	LD 115	**725343**	10X12X210	**713603**	VS0115	**738158**	DK 115	**708970**
SNX 222	SNX 222/522/319/619	**747036**	LD 125	**725344**	10X12X230	**713613**	VS0125	**738161**	DK 125	**708976**
SNX 224	SNX 224/524/320/620	**747037**	LD 135	**725345**	10X12X245	**713622**	VS0135	**738162**	DK 135	**708983**
SNX 226	SNX 226/526	**747038**			10X12X265	**713634**	VS0145	**738164**	DK 145	**740381**
SNX 228	SNX 228/528	**747039**			10X12X280	**713641**	VS0155	**738166**	DK 155	**740382**
SNX 230	SNX 230/530	**747040**			10X12X300	**713647**	VS0165	**738168**	DK 165	**740383**
SNX 232	SNX 232/532	**747041**			10X12X300	**713647**	VS0175	**738170**	DK 175	**740384**

FEATURES/BENEFITS PAGE B16-23 | NOMENCLATURE PAGE B16-6 | SELECTION PAGE B16-26 | DIMENSIONS PAGE B16-26

DIMENSIONS

SNX 200 - LD/FS/DK

Housing GG	Spherical Roller Bearing		Fixing Rings			Spherical Roller Bearing	
Description	Description	Part No.	Description	Qty	Part No.	Description	Part No
SNX 209	22209E1.C3	**421260**	SR 85x3.5	2	**747105**		
SNX 210	22210E1.C3	**421261**	SR 90x9	2	**747108**		
SNX 211	22211E1.C3	**421262**	SR 100x9.5	2	**747111**		
SNX 212	22212E1.C3	**421263**	SR 110x10	2	**747115**		
SNX 213	22213E1.C3	**421264**	SR 120x10	2	**747118**		
SNX 215	22215E1.C3	**421265**	SR 130x12.5	2	**747121**		
SNX 216	22216E1.C3	**421266**	SR 140x12.5	2	**747123**		
SNX 217	22217E1.C3	**421267**	SR 150x12.5	2	**747125**		
SNX 218	22218E1.C3	**421268**	SR 160x12.5	2	**747128**	23218E1.C3	**421396**
SNX 219	22219E1.C3	**422996**	SR 170x12.5	2	**747130**		
SNX 220	22220E1.C3	**421269**	SR 180x12	2	**747132**	23220E.C3	**703943**
SNX 222	22222E1.C3	**421270**	SR 200x13.5	2	**747137**	23222.C3	**740623**
SNX 224	22224E1.C3	**421271**	SR 215x14	2	**747141**	23224.C3	**703967**
SNX 226	22226E1.C3	**421272**	SR 230x13	2	**747143**	23226.C3	**703976**
SNX 228	22228E1.C3	**421273**	SR 250x15	2	**747146**	23228.C3	**741031**
SNX 230	22230E1.C3	**421274**	SR 270x16.5	2	**747149**	23230.C3	**703990**
SNX 232	22232E1.C3	**421275**	SR 290x17	2	**747152**	23232.C3	**741550**

Housing GG	Fixing Rings			Locknut		Lockwasher		Sight Glasses	
Description	Description	Qty	Part No.	Description	Part No	Description	Part No	Description	Part No.
SNX 209				KM 9	**046285**	MB 9	**046304**	SG 209	**740452**
SNX 210				KM 10	**046286**	MB 10	**046305**	SG 210	**740452**
SNX 211				KM 11	**046287**	MB 11	**046306**	SG 211	**740452**
SNX 212				KM 12	**046487**	MB 12	**046489**	SG 212	**740452**
SNX 213				KM 13	**046288**	MB 13	**046307**	SG 213	**740452**
SNX 215				KM 15	**046289**	MB 15	**046308**	SG 215	**740452**
SNX 216				KM 16	**046290**	MB 16	**046309**	SG 216	**740452**
SNX 217				KM 17	**046291**	MB 17	**046310**	SG 217	**740453**
SNX 218	SR 160x6.25	2	**747189**	KM 18	**046292**	MB 18	**046311**	SG 218	**740453**
SNX 219				KM 19	**046488**	MB 19	**046490**	SG 219	**740453**
SNX 220	SR 180x4.85	2	**747190**	KM 20	**046293**	MB 20	**046312**	SG 220	**740453**
SNX 222	SR 200x5.1	2	**747191**	KM 22	**046294**	MB 22	**046313**	SG 222	**740453**
SNX 224	SR 215x5	2	**712225**	KM 24	**046295**	MB 24	**046314**	SG 224	**740453**
SNX 226	SR 230x5	2	**747192**	KM 26	**046296**	MB 26	**046315**	SG 226	**740453**
SNX 228	SR 250x5	2	**747193**	KM 28	**046297**	MB 28	**046316**	SG 228	**740453**
SNX 230	SR 270x5	2	**747194**	KM 30	**046298**	MB 30	**046317**	SG 230	**740453**
SNX 232	SR 290x5	2	**747195**	KM 32	**046299**	MB 32	**046318**	SG 232	**740453**

Plummer Blocks
Sleeve Bearings
SLEEVOIL
Take-Up Frames
Engineering
Part Number Index
Keyword Index

DIMENSIONS

SNX 500

Plummer Blocks for bearings 1200K, 2200K, 22200K, 23200K

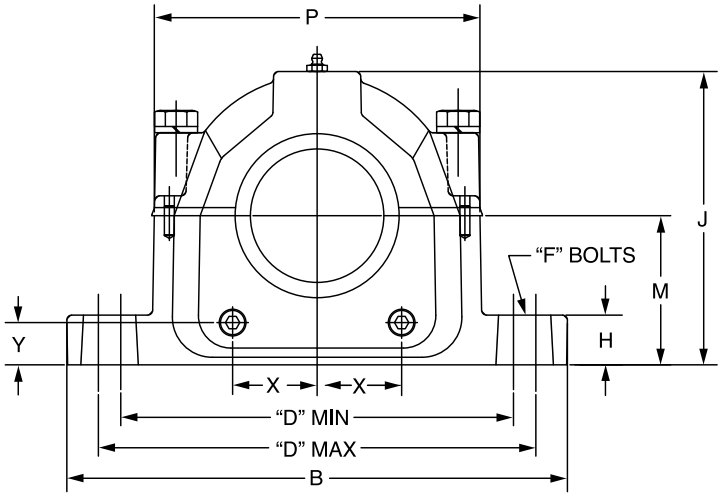

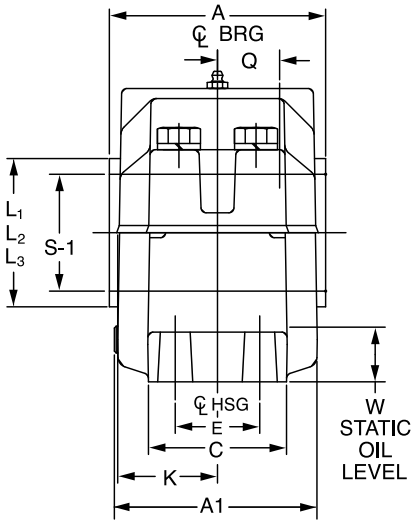

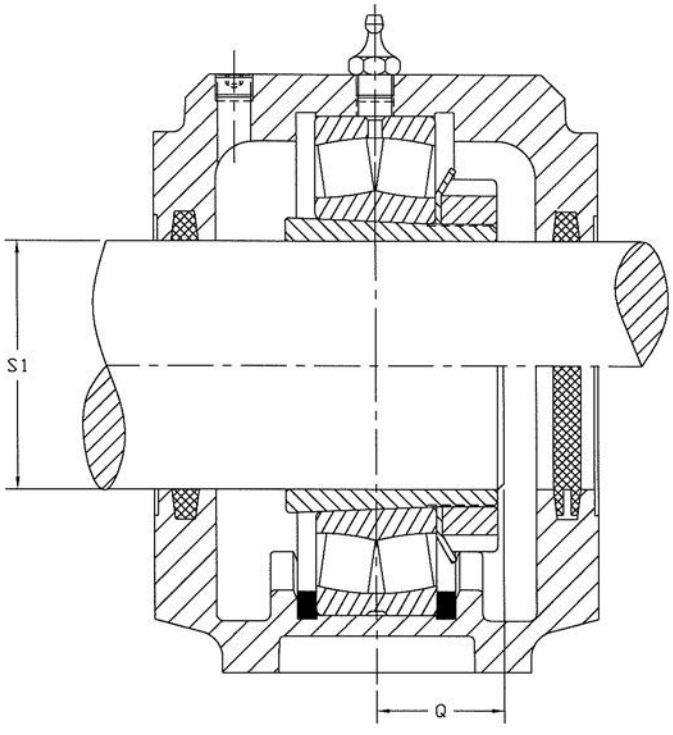

DIMENSIONS

SNX 500

Dimensions in mm

Description	Wt. kg	S-1 Shaft Size	A_1	B	C	D Min	D Max	F Bolt Dia	H	J	K	M	P	Q	W Static Oil Level	X	Y	A (With Seals) LD	FELT	VR	TS	TT	EC	L_1 VR	L_2 TS	L_3 TT
SNX 509	4.3	40	94	210	60	159	178	M12	25	112	45	60	124	23	24.0	29	20	91	91	100	99	107	91	50	55	65
SNX 510	5.1	45	99	210	60	165	178	M12	23	113	48	60	130	24	29.0	31	17	95	95	105	103	111	95	55	63	70
SNX 511	7.1	50	104	244	70	187	210	M16	26	133	50	70	147	25	28.5	33	22	100	100	110	108	116	100	60	68	75
SNX 512	9.5	55	116	270	70	197	230	M16	29	139	56	70	156	27	32.0	38	20	112	112	121	119	127	112	65	75	82
SNX 513	9.7	60	113	279	80	206	241	M16	30	155	55	80	165	30	27.0	41	25	110	110	119	121	125	110	70	81	92
SNX 515	11.3	65	121	283	80	219	245	M16	29	161	59	80	179	31	38.0	44	21	117	117	124	126	130	117	75	86	97
SNX 516	12.7	70	127	320	90	245	279	M20	33	178	62	95	202	34	34.5	49	31	123	123	136	134	143	123	82	94	102
SNX 517	15.7	75	132	320	90	251	279	M20	32	187	63	95	208	36	35.5	53	28	125	125	139	137	145	125	87	100	107
SNX 518	16.7	80	151	346	98	260	299	M20	35	195	72	100	220	38	47.0	57	28	144	144	157	155	163	144	92	105	112
SNX 519	27.0	85	156	360	98	276	314	M20	35	214	75	112	229	41	39.5	60	35	150	150	162	161	169	150	97	110	124
SNX 520	27.8	90	164	390	110	295	333	M24	40	220	80	112	248	43	45.0	67	30	160	160	171	169	177	160	102	127	124
SNX 522	35.8	100	174	419	120	324	364	M24	45	238	84	125	269	48	53.5	73	34	168	168	177	175	183	168	112	139	144
SNX 524	41.1	110	191	419	120	337	368	M24	45	267	93	140	286	51	57.0	81	42	185	185	199	195	202	185	124	149	154
SNX 526	55.2	115	197	445	130	374	387	M24	50	290	95	150	315	55	49.0	84	39	191	191	204	200	211	191	129	158	154
SNX 528	69.0	125	210	500	150	400	420	M30	50	298	102	150	337	58	51.5	92	35	203	203	215	211	222	203	139	160	164
SNX 530	77.3	135	226	530	160	443	457	M30	60	317	110	160	364	63	53.0	91	34	220	220	233	230	239	220	149	180	176
SNX 532	99.9	140	241	550	160	457	483	M30	60	338	118	170	379	68	53.2	102	34	235	235	247	243	253	235	154	188	186

Description	Housing GG		SK LD Seal		SK FS Seal	
	Description	Part No.	Description	Part No.	Description	Part No.
SNX 509	SNX 209/509	**747025**	SK 509 LD 40	**496446**	SK 509 FS 40	**496464**
SNX 510	SNX 210/510/308/608	**747026**	SK 510 LD 45	**496447**	SK 510 FS 45	**496465**
SNX 511	SNX 211/511/309/609	**747027**	SK 511 LD 50	**496448**	SK 511 FS 50	**496466**
SNX 512	SNX 212/512/310/610	**747028**	SK 512 LD 55	**496449**	SK 512 FS 55	**496467**
SNX 513	SNX 213/513/311/611	**747029**	SK 513 LD 60	**496450**	SK 513 FS 60	**496468**
SNX 515	SNX 215/515/312/612	**747030**	SK 515 LD 65	**496451**	SK 515 FS 65	**496469**
SNX 516	SNX 216/516/313/613	**747031**	SK 516 LD 70	**496452**	SK 516 FS 70	**496470**
SNX 517	SNX 217/517/314	**747032**	SK 517 LD 75	**496453**	SK 517 FS 75	**496471**
SNX 518	SNX 218/518/315/615	**747033**	SK 518 LD 80	**496454**	SK 518 FS 80	**496472**
SNX 519	SNX 219/519/316/616	**747034**	SK 519 LD 85	**496455**	SK 519 FS 85	**496473**
SNX 520	SNX 220/520/317/617	**747035**	SK 520 LD 90	**496456**	SK 520 FS 90	**496474**
SNX 522	SNX 222/522/319/619	**747036**	SK 522 LD 100	**496457**	SK 522 FS 100	**496475**
SNX 524	SNX 224/524/320/620	**747037**	SK 524 LD 110	**496458**	SK 524 FS 110	**496476**
SNX 526	SNX 226/526	**747038**	SK 526 LD 115	**496459**	SK 526 FS 115	**496477**
SNX 528	SNX 228/528	**747039**	SK 528 LD 125	**496460**	SK 528 FS 125	**496478**
SNX 530	SNX 230/530	**747040**	SK 530 LD 135	**496461**	SK 530 FS 135	**496479**
SNX 532	SNX 232/532	**747041**	SK 532 LD 140	**496462**	SK 532 FS 140	**496480**

DIMENSIONS

SNX 500

	SK VR Seal		Labyrinth Seal		Triple-Tect Seal		EC End Cover	
Description	Description	Part No.	Description	Part No.	Description	Part No.	Description	Part No.
SNX 509	SK 509 VR 40	**496482**	TS 509	**747328**	TT 509	**747384**	DK 55	**709137**
SNX 510	SK 510 VR 45	**496483**	TS 510	**747329**	TT 510	**747385**	DK 60	**709140**
SNX 511	SK 511 VR 50	**496484**	TS 511	**747330**	TT 511	**747386**	DK 65	**709143**
SNX 512	SK 512 VR 55	**496485**	TS 512	**747331**	TT 512	**747387**	DK 70	**709146**
SNX 513	SK 513 VR 60	**496486**	TS 513	**747332**	TT 513	**747388**	DK 75	**709152**
SNX 515	SK 515 VR 65	**496487**	TS 515	**747333**	TT 515	**747389**	DK 85	**709162**
SNX 516	SK 516 VR 70	**496488**	TS 516	**747334**	TT 516	**747390**	DK 90	**709166**
SNX 517	SK 517 VR 75	**496489**	TS 517	**747335**	TT 517	**747391**	DK 90	**709166**
SNX 518	SK 518 VR 80	**496490**	TS 518	**747336**	TT 518	**747392**	DK 100	**708959**
SNX 519	SK 519 VR 85	**496491**	TS 519	**747337**	TT 519	**747393**	DK 110	**708966**
SNX 520	SK 520 VR 90	**496492**	TS 520	**747338**	TT 520	**747394**	DK 115	**708970**
SNX 522	SK 522 VR 100	**496493**	TS 522	**747339**	TT 522	**747395**	DK 125	**708976**
SNX 524	SK 524 VR 110	**496494**	TS 524	**747340**	TT 524	**747396**	DK 135	**708983**
SNX 526	SK 526 VR 115	**496495**	TS 526	**747341**	TT 526	**747397**	DK 145	**740381**
SNX 528	SK 528 VR 125	**496496**	TS 528	**747342**	TT 528	**747398**	DK 155	**740382**
SNX 530	SK 530 VR 135	**496497**	TS 530	**747343**	TT 530	**747399**	DK 165	**740383**
SNX 532	SK 532 VR 140	**496498**	TS 532	**747344**	TT 532	**747400**	DK 175	**740384**

	Spherical Roller Bearing		Fixing Rings			Adapters		Spherical Roller Bearing	
Description	Description	Part No.	Description	Quantity	Part No.	Description	Part No.	Description	Part No.
SNX 509	22209EK1.C3	**422134**	SR 85x3.5	2	**747105**	H 309	**046331**		
SNX 510	22210EK1.C3	**422137**	SR 90x9	2	**747108**	H 310	**046332**		
SNX 511	22211EK1.C3	**422123**	SR 100x9.5	2	**747111**	H 311	**046219**		
SNX 512	22212EK1.C3	**422978**	SR 110x10	2	**747115**	H 312	**046333**		
SNX 513	22213EK1.C3	**422124**	SR 120x10	2	**747118**	H 313	**046221**		
SNX 515	22215EK1.C3	**422001**	SR 130x12.5	2	**747121**	H 315	**046222**		
SNX 516	22216EK1.C3	**422003**	SR 140x12.5	2	**747123**	H 316	**046223**		
SNX 517	22217EK1.C3	**422005**	SR 150x12.5	2	**747125**	H 317	**046224**		
SNX 518	22218EK1.C3	**422007**	SR 160x12.5	2	**747128**	H 318	**046225**	23218K.C3	**739329**
SNX 519	22219EK1.C3	**422979**	SR 170x12.5	2	**747130**	H 319	**719499**		
SNX 520	22220EK1.C3	**422009**	SR 180x12	2	**747132**	H 320	**046226**	23220K.C3	**703941**
SNX 522	22222EK1.C3	**422011**	SR 200x13.5	2	**747137**	H 322	**046227**	23222K.C3	**703951**
SNX 524	22224EK1.C3	**422013**	SR 215x14	2	**747141**	H 3124	**046228**	23224EASK.M.C3	**703967**
SNX 526	22226EK1.C3	**422015**	SR 230x13	2	**747143**	H 3126	**046229**	23226K.C3	**703971**
SNX 528	22228EK1.C3	**422017**	SR 250x15	2	**747146**	H 3128	**046230**	23228K.C3	**703982**
SNX 530	22230EK1.C3	**422019**	SR 270x16.5	2	**747149**	H 3130	**046231**	23230K.C3	**703989**
SNX 532	22232EK1.C3	**422021**	SR 290x17	2	**747152**	H 3132	**046232**	23232K.C3	**703996**

DIMENSIONS

SNX 500

	Fixing Rings			Adapters		Sight Glasses	
Description	Description	Quantity	Part No.	Description	Part No.	Description	Part No.
SNX 509						SG 509	**740452**
SNX 510						SG 510	**740452**
SNX 511						SG 511	**740452**
SNX 512						SG 512	**740452**
SNX 513						SG 513	**740452**
SNX 515						SG 515	**740452**
SNX 516						SG 516	**740452**
SNX 517						SG 517	**740453**
SNX 518	SR 160x6.25	2	**747189**	H 2318	**719400**	SG 518	**740453**
SNX 519				H 2319	**046719**	SG 519	**740453**
SNX 520	SR 180X4.85	2	**747190**	H 2320	**046720**	SG 520	**740453**
SNX 522	SR 200x5.1	2	**747191**	H 2322	**046721**	SG 522	**740453**
SNX 524	SR 215x5	2	**712225**	H 2324	**046722**	SG 524	**740453**
SNX 526	SR 230x5	2	**747192**	H 2326	**046723**	SG 526	**740453**
SNX 528	SR 250x5	2	**747193**	H 2328	**719406**	SG 528	**740453**
SNX 530	SR 270x5	2	**747194**	H 2330	**053201**	SG 530	**740453**
SNX 532	SR 290x5	2	**747195**	H 2332	**719408**	SG 532	**740453**

	Self-aligning Ball Bearings		Fixing Rings			Adapters	
Description	Description	Part No.	Description	Quantity	Part No.	Description	Part No.
SNX 509	1209K.C3	**052637**	SR 85x5.5	2	**747177**	H 209	**719372**
SNX 510	1210K.C3	**052638**	SR 90x10.5	2	**747178**	H 210	**719373**
SNX 511	1211K.C3	**052639**	SR 100x12	2	**747179**	H 211	**719374**
SNX 512	1212K.C3	**739145**	SR 110x13	2	**747180**	H 212	**719375**
SNX 513	1213K.C3	**052640**	SR 120x14	2	**747181**	H 213	**719376**
SNX 515	1215K.C3	**052641**	SR 130x15.5	2	**747182**	H 215	**719378**
SNX 516	1216K.C3	**052642**	SR 140x16	2	**747183**	H 216	**719379**
SNX 517	1217K.C3	**052643**	SR 150x16.5	2	**747184**	H 217	**719380**
SNX 518	1218K.C3	**052570**	SR 160x17.5	2	**747185**	H 218	**719381**
SNX 519	1219K.C3	**701659**	SR 170x18	2	**747186**	H 219	**719382**
SNX 520	1220K.C3	**052644**	SR 180x18	2	**747187**	H 220	**719383**
SNX 522	1222K.C3	**051841**	SR 200x21	2	**747188**	H 222	**719385**

	Self-aligning Ball Bearings		Fixing Rings			Adapters	
Description	Description	Part No.	Description	Quantity	Part No.	Description	Part No.
SNX 509	2209K.C3	**739150**	SR 85x3.5	2	**747105**	H 309	**046331**
SNX 510	2210K.C3	**702830**	SR 90x9	2	**747108**	H 310	**046332**
SNX 511	2211K.C3	**702844**	SR 100x9.5	2	**747111**	H 311	**046219**
SNX 512	2212K.C3	**702857**	SR 110x10	2	**747115**	H 312	**046333**
SNX 513	2213K.C3	**702867**	SR 120x10	2	**747118**	H 313	**046221**
SNX 515	2215K.C3	**739153**	SR 130x12.5	2	**747121**	H 315	**046222**
SNX 516	2216K.C3	**702883**	SR 140x12.5	2	**747123**	H 316	**046223**
SNX 517	2217K.C3	**702893**	SR 150x12.5	2	**747125**	H 317	**046224**
SNX 518	2218K.C3	**739154**	SR 160x12.5	2	**747128**	H 318	**046225**
SNX 519	2219K.M.C3	**702904**	SR 170x12.5	2	**747130**	H 319	**719499**
SNX 520	2220K.M.C3	**702907**	SR 180x12	2	**747132**	H 320	**046226**
SNX 522	2222K.C3	**421399**	SR 200x13.5	2	**747137**	H 322	**046227**

FEATURES/BENEFITS PAGE B16-23	NOMENCLATURE PAGE B16-6	SELECTION PAGE B16-26	DIMENSIONS PAGE B16-26

DIMENSIONS

SNX 300

Plummer Blocks for bearings 22300

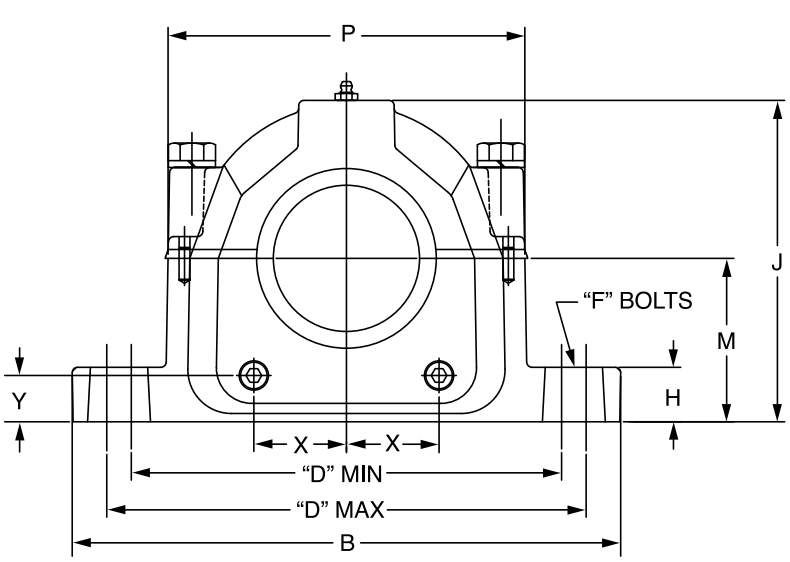

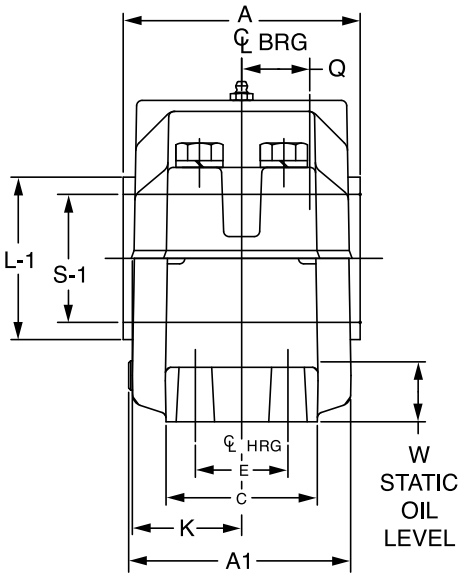

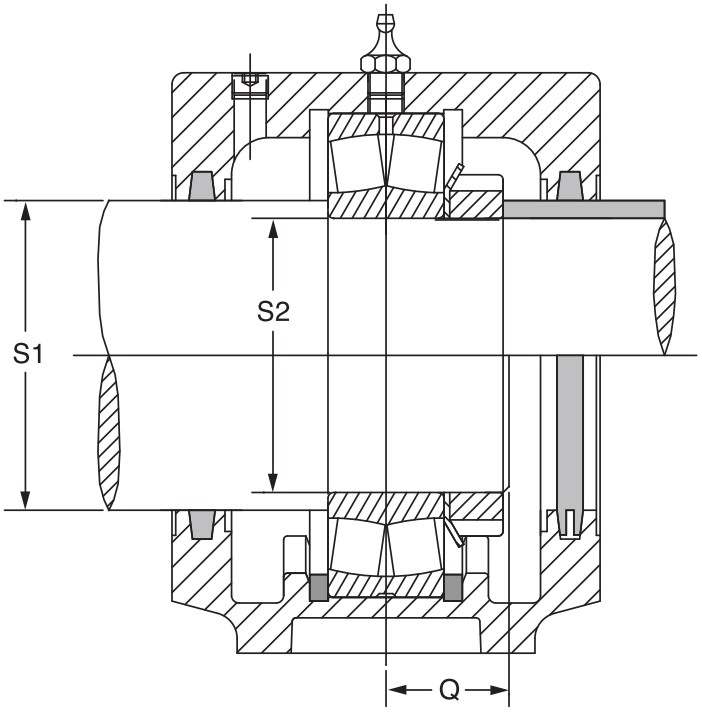

FEATURES/BENEFITS PAGE B16-23	NOMENCLATURE PAGE B16-6	SELECTION PAGE B16-26	DIMENSIONS PAGE B16-26

DIMENSIONS

SNX 300

Dimensions in mm

Description	kg	S-1 Shaft Size	S-2 Shaft Size	A1	B	C	D Min	D Max	F Bolt Dia	H	J	K	M	P	Q ★	W Static Oil Level	X	Y	A (With Seals) Felt FS	A (With Seals) End Cover DK	L1
SNX 308	5.1	50	40	99.1	210	59.5	165.1	177.8	M12	22.6	113	47.6	59.9	130.2	18	26.5	30.5	17	95.3	95.3	64.3
SNX 309	7.1	55	45	103.8	244.4	69.9	187.3	209.6	M16	26.2	133.4	50	69.9	146.8	18	32.5	33	22.1	100.0	100.0	68.1
SNX 310	9.5	60	50	115.8	269.9	69.9	196.9	229.6	M16	29.4	138.9	56	69.9	155.6	20	28.6	38	19.5	112.0	112.0	75.2
SNX 311	9.7	65	55	113.3	279.4	80	206.4	241.3	M16	30.2	154.8	54.8	79.9	165.1	21.5	33.9	41.1	25	109.5	109.5	79.2
SNX 312	11.3	70	60	121.2	282.6	80	219.1	244.5	M16	29.4	161.1	58.7	79.9	179.4	23	30.7	44	20.5	117.4	117.4	88.1
SNX 313	12.7	75	65	126.8	319.9	90	244.5	279.4	M20	32.9	177.6	61.5	94.9	201.6	24	41.7	49	30.5	123.0	123.0	93.2
SNX 314	15.7	80	70	131.6	319.7	90	250.8	279.4	M20	31.8	187.4	62.7	94.9	208	25.5	37.3	52.6	28	125.2	125.2	97.3
SNX 315	16.7	85	75	150.8	346.1	98.4	260.4	298.5	M20	34.9	195.3	72.2	99.9	219.9	27.5	38.8	56.8	27.5	144.4	144.4	102.1
SNX 316	27.0	90	80	156.4	360	98.4	276.2	314.3	M20	35	213.6	75	111.9	229.4	29	46.9	60	35	150.0	150.0	113.3
SNX 317	27.8	95	85	164.1	390	110.3	295.3	333.4	M24	39.7	219.9	80.2	111.9	248.4	30	42.1	66.6	30	160.3	160.3	113.3
SNX 319	35.8	110	95	173.9	419.1	120.7	323.9	364.3	M24	44.9	238.5	83.7	124.9	269.1	33.5	50.1	73	33.8	167.5	167.5	131.3
SNX 320	41.1	115	100	191.3	419.1	119.9	336.6	368.3	M24	45	267	92.5	139.9	285.8	36.5	58.1	81	42.1	184.9	184.9	131.3

Description	Housing GG Description	Housing GG Part No.	SK FS Seal Description	SK FS Seal Part No.	End Cover Description	End Cover Part No.	Sight Glasses Description	Sight Glasses Part No.
SNX 308	SNX 210/510/308/608	**747026**	SK 308 FS 50	**496400**	DK 60	**709140**	SG 308	**740452**
SNX 309	SNX 211/511/309/609	**747027**	SK 309 FS 55	**496401**	DK 65	**709143**	SG 309	**740452**
SNX 310	SNX 212/512/310/610	**747028**	SK 310 FS 60	**496402**	DK 70	**709146**	SG 310	**740452**
SNX 311	SNX 213/513/311/611	**747029**	SK 311 FS 65	**496403**	DK 75	**709152**	SG 311	**740452**
SNX 312	SNX 215/515/312/612	**747030**	SK 312 FS 70	**496404**	DK 85	**709162**	SG 312	**740452**
SNX 313	SNX 216/516/313/613	**747031**	SK 313 FS 75	**496405**	DK 90	**709166**	SG 313	**740452**
SNX 314	SNX 217/517/314	**747032**	SK 314 FS 80	**496406**	DK 90	**709166**	SG 314	**740453**
SNX 315	SNX 218/518/315/615	**747033**	SK 315 FS 85	**496407**	DK 100	**708959**	SG 315	**740453**
SNX 316	SNX 219/519/316/616	**747034**	SK 316 FS 90	**496408**	DK 110	**708966**	SG 316	**740453**
SNX 317	SNX 220/520/317/617	**747035**	SK 317 FS 95	**496409**	DK 115	**708970**	SG 317	**740453**
SNX 319	SNX 222/522/319/619	**747036**	SK 319 FS 110	**496410**	DK 125	**708976**	SG 319	**740453**
SNX 320	SNX 224/524/320/620	**747037**	SK 320 FS 115	**496411**	DK 135	**708983**	SG 320	**740453**

Description	Spherical Roller Bearing Description	Spherical Roller Bearing Part No.	Fixing Rings Description	Fixing Rings Quantity	Fixing Rings Part No.	Locknut Description	Locknut Part No.	Lockwasher Description	Lockwasher Part No.
SNX 308	22308E1.C3	**423124**	SR 90X4	**2**	**747107**	KM 8	**046492**	MB 8	**046496**
SNX 309	22309E1.C3	**423125**	SR 100X4	**2**	**747110**	KM 9	**046285**	MB 9	**046304**
SNX 310	22310E1.C3	**423143**	SR 110X4	**2**	**747114**	KM 10	**046286**	MB 10	**046305**
SNX 311	22311E1.C3	**423126**	SR 120X4	**2**	**747117**	KM11	**046287**	MB11	**046306**
SNX 312	22312E1.C3	**423127**	SR 130X4	**2**	**747120**	KM 12	**046487**	MB 12	**046489**
SNX 313	22313E1.C3	**423128**	SR 140X5	**2**	**747122**	KM13	**046288**	MB13	**046307**
SNX 314	22314E1.C3	**423129**	SR 150X5	**2**	**747124**	KM 14	**046238**	MB 14	**046239**
SNX 315	22315E1.C3	**423130**	SR 160X5	**2**	**747126**	KM 15	**046289**	MB 15	**046308**
SNX 316	22316E1.C3	**423144**	SR 170X5	**2**	**747129**	KM 16	**046290**	MB 16	**046309**
SNX 317	22317E1.C3	**423131**	SR 180X5	**2**	**747131**	KM 17	**046291**	MB 17	**046310**
SNX 319	22319E1.C3	**423145**	SR 200X6.5	**2**	**747135**	KM 19	**046488**	MB 19	**049490**
SNX 320	22320E1.C3	**423132**	SR 215X6.5	**2**	**747139**	KM 20	**046293**	MB 20	**046312**

DIMENSIONS

SNX 600

Plummer Blocks for bearings 22300K

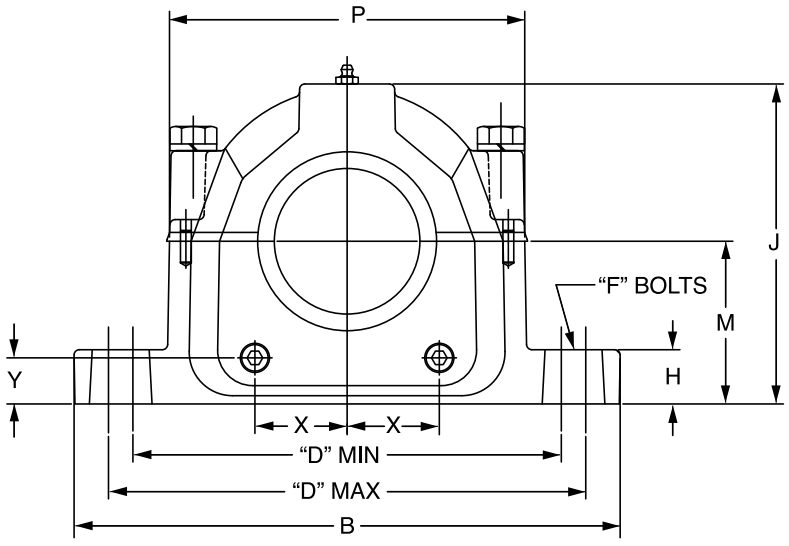

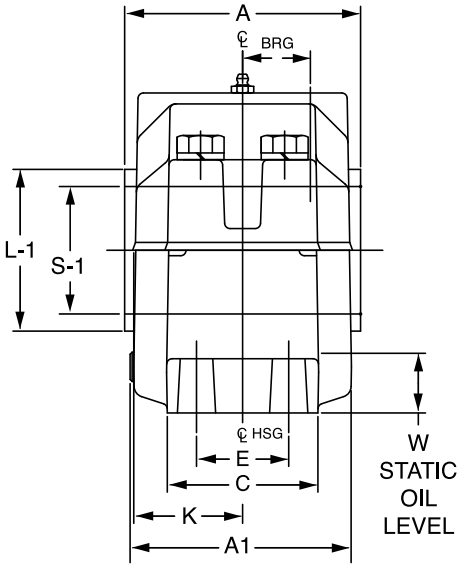

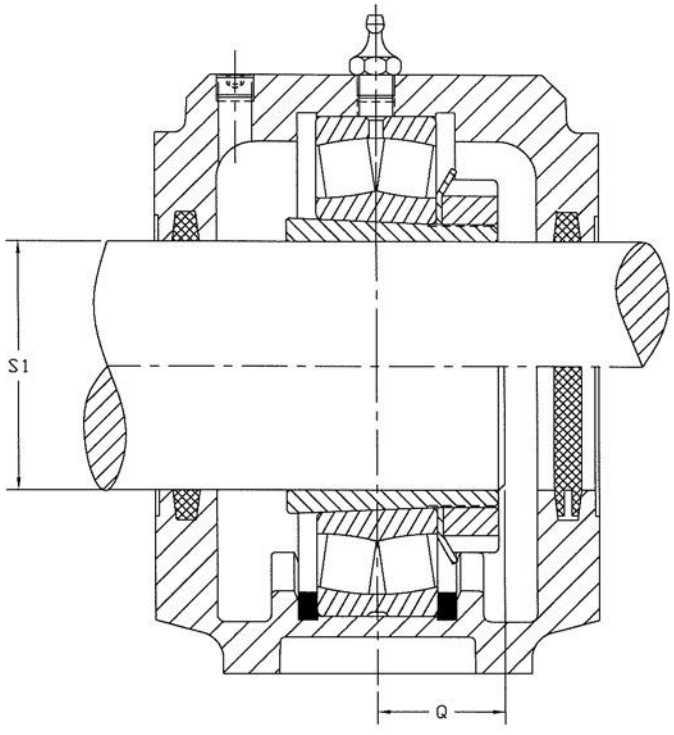

DIMENSIONS

SNX 600

Dimensions in mm

Description	Kg	S-1 Shaft Size	A1	B	C	D Min	D Max	F Bolt Dia	H	J	K	M	P	Q	W Static Oil Level	X	Y	A (With Seals) LD	A (With Seals) Felt FS	A (With Seals) End Cover	VR	L1 VR
SNX 608	5.1	35	99	210	60	165	178	M12	23	113	48	60	130	27	26.5	31	17	95	95	95	103	43
SNX 609	7.1	40	104	244	70	187	210	M16	26	133	50	70	147	29	32.5	33	22	100	100	100	110	50
SNX 610	9.5	45	116	270	70	197	230	M16	29	139	56	70	156	32	28.6	38	20	112	112	112	121	55
SNX 611	9.7	50	113	279	80	206	241	M16	30	155	55	80	165	34	33.9	41	25	110	110	110	119	60
SNX 612	11.3	55	121	283	80	219	245	M16	29	161	59	80	179	36	30.7	44	21	117	117	117	124	65
SNX 613	12.7	60	127	320	90	245	279	M20	33	178	62	95	202	35	41.7	49	31	123	123	123	132	70
SNX 615	16.7	65	151	346	98	260	299	M20	35	195	72	100	220	43	38.8	57	28	144	144	144	153	75
SNX 616	27.0	70	156	360	98	276	314	M20	35	214	75	112	229	46	46.9	60	35	150	150	150	162	82
SNX 617	27.8	75	164	390	110	295	333	M24	40	220	80	112	248	48	42.1	67	30	160	160	160	171	87
SNX 619	35.8	85	174	419	120	324	364	M24	45	238	84	125	269	53	50.1	73	34	168	168	168	177	97
SNX 620	41.1	90	191	419	120	337	368	M24	45	267	93	140	286	57	58.1	81	42	185	185	185	196	102

Description	Housing GG Description	Housing GG Part No.	SK LD Seal Description	SK LD Seal Part No.	SK FS Seal Description	SK FS Seal Part No.	SK VR Seal Description	SK VR Seal Part No.	End Cover Description	End Cover Part No.
SNX 608	SNX 210/510/308/608	**747026**	SK 608 LD 35	**496412**	SK 608 FS 35	**496423**	SK 608 VR 35	**496434**	DK 60	**709140**
SNX 609	SNX 211/511/309/609	**747027**	SK 609 LD 40	**496413**	SK 609 FS 40	**496424**	SK 609 VR 40	**496435**	DK 65	**709143**
SNX 610	SNX 212/512/310/610	**747028**	SK 610 LD 45	**496414**	SK 610 FS 45	**496425**	SK 610 VR 45	**496436**	DK 70	**709146**
SNX 611	SNX 213/513/311/611	**747029**	SK 611 LD 50	**496415**	SK 611 FS 50	**496426**	SK 611 VR 50	**496437**	DK 75	**709152**
SNX 612	SNX 215/515/312/612	**747030**	SK 612 LD 55	**496416**	SK 612 FS 55	**496427**	SK 612 VR 55	**496438**	DK 85	**709162**
SNX 613	SNX 216/516/313/613	**747031**	SK 613 LD 60	**496417**	SK 613 FS 60	**496428**	SK 613 VR 60	**496439**	DK 90	**709166**
SNX 615	SNX 218/518/315/615	**747033**	SK 615 LD 65	**496418**	SK 615 FS 65	**496429**	SK 615 VR 65	**496440**	DK 100	**708959**
SNX 616	SNX 219/519/316/616	**747034**	SK 616 LD 70	**496419**	SK 616 FS 70	**496430**	SK 616 VR 70	**496441**	DK 110	**708966**
SNX 617	SNX 220/520/317/617	**747035**	SK 617 LD 75	**496420**	SK 617 FS 75	**496431**	SK 617 VR 75	**496442**	DK 115	**708970**
SNX 619	SNX 222/522/319/619	**747036**	SK 619 LD 85	**496421**	SK 619 FS 85	**496432**	SK 619 VR 85	**496443**	DK 125	**708976**
SNX 620	SNX 224/524/320/620	**747037**	SK 620 LD 90	**496422**	SK 620 FS 90	**496433**	SK 620 VR 90	**496444**	DK 135	**708983**

Description	Spherical roller bearing Description	Spherical roller bearing Part No.	Fixing rings Description	Fixing rings Quantity	Fixing rings Part No.	Adapters Description	Adapters Part No.	Sight Glasses Description	Sight Glasses Part No.
SNX 608	22308E1K.C3	**423375**	SR 90X4	2	**747107**	H 2308	**046710**	SG 608	**740452**
SNX 609	22309E1K.C3	**423100**	SR 100X4	2	**747110**	H 2309	**046711**	SG 609	**740452**
SNX 610	22310E1K.C3	**423372**	SR 110X4	2	**747114**	H 2310	**046712**	SG 610	**740452**
SNX 611	22311E1K.C3	**423102**	SR 120X4	2	**747117**	H 2311	**046713**	SG 611	**740452**
SNX 612	22312E1K.C3	**423376**	SR 130X5	2	**747120**	H 2312	**046714**	SG 612	**740452**
SNX 613	22313E1K.C3	**423104**	SR 140X5	2	**747122**	H 2313	**046715**	SG 613	**740452**
SNX 615	22315E1K.C3	**423106**	SR 160X5	2	**747126**	H 2315	**719397**	SG 615	**740453**
SNX 616	22316E1K.C3	**423373**	SR 170X5	2	**747129**	H 2316	**046717**	SG 616	**740453**
SNX 617	22317E1K.C3	**423108**	SR 180X5	2	**747131**	H 2317	**046718**	SG 617	**740453**
SNX 619	22319E1K.C3	**423374**	SR 200X6.5	2	**747135**	H 2319	**046719**	SG 619	**740453**
SNX 620	22320E1K.C3	**423110**	SR 215X6.5	2	**747139**	H 2320	**046720**	SG 620	**740453**

DIMENSIONS

SNX 30

Plummer Blocks for bearings 23000K

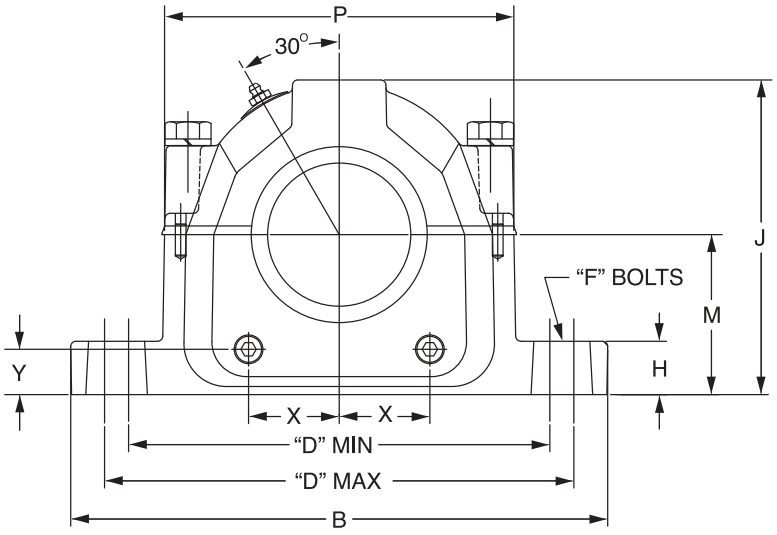

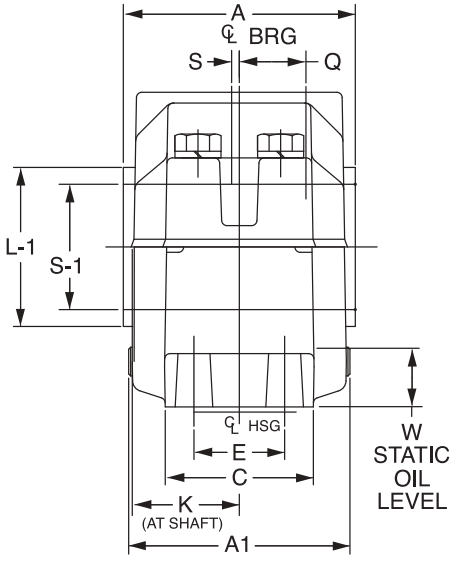

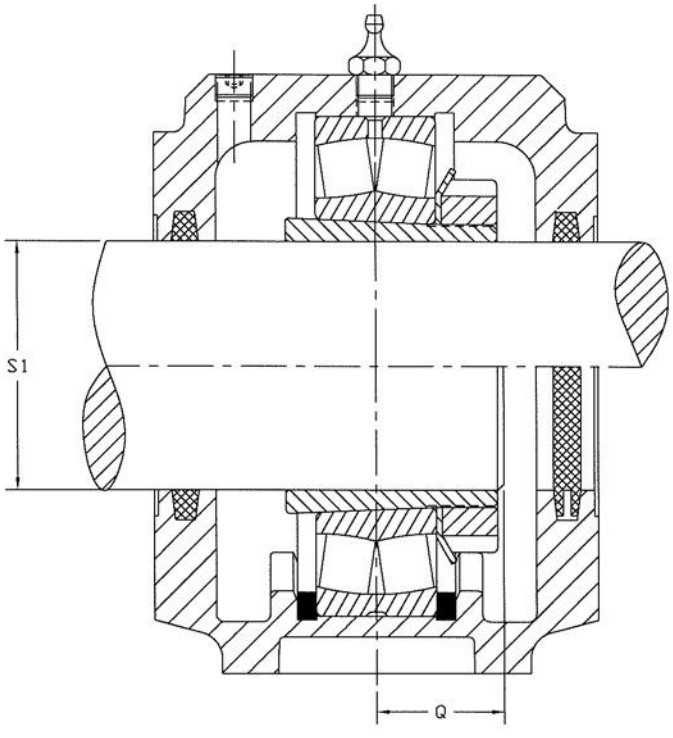

DIMENSIONS

SNX 30

Dimensions in mm

Description	kg	S-1 Shaft Welleno	A1	B	C	D Min	D Max	F Bolt Dia	H	J	K	M	P	Q	W Static Oil Level	X	Y	A (With Seals) LD	A (With Seals) Felt	A (With Seals) End Cover	A (With Seals) VR	L1
SNX 3024	81.0	110	167	390	110	295	333	M24	40	220	80	112	248	38.0	37	66.5	30.0	160	160	160	175	113
SNX 3026	105.0	115	174	419	121	324	364	M24	45	239	84	125	269	49.0	42	73.0	33.8	168	168	168	179	118
SNX 3028	121.0	125	191	419	120	337	368	M24	45	267	93	140	286	50.5	52	81.0	42.0	185	185	185	199	139
SNX 3030	161.0	135	197	445	130	374	387	M24	50	290	95	150	315	54.0	56	84.1	39.0	191	191	191	204	149
SNX 3032	161.0	140	197	445	130	374	387	M24	50	290	95	150	315	58.0	54	84.1	39.0	191	191	191	204	154
SNX 3034	162.0	150	226	530	159	426	464	M30	60	317	110	160	364	62.5	50	91.3	33.7	220	220	220	234	164
SNX 3036	235.0	160	241	550	159	457	483	M30	60	338	118	170	379	67.0	52	102.4	34.0	235	235	235	252	176
SNX 3038	235.0	170	241	550	159	457	483	M30	60	338	118	170	379	68.5	48	102.4	34.0	235	235	235	252	186

Housing		LD Seal		FS Seal		VR Seal		End Cover	
Description	Part No.	Description	Part No.	Description	Part No.	Description	Part No.	Description	Part No.
SNX 3024	**747042**	LD 110	**725342**	10X12X200	**713596**	VS0110	**738157**	DK 110	**708966**
SNX 3026	**747043**	LD 115	**725343**	10X12X210	**713603**	VS0115	**738158**	DK 115	**708970**
SNX 3028	**747044**	LD 125	**725344**	10X12X230	**713613**	VS0125	**738160**	DK 125	**708976**
SNX 3030	**747045**	LD 135	**725345**	10X12X245	**713622**	VS0135	**738162**	DK 135	**708983**
SNX 3032	**747046**	LD 140	**725346**	10X12X265	**713634**	VS0140	**738163**	DK 140	**708989**
SNX 3034	**747047**			10X12X280	**713641**	VS0150	**738165**	DK 165	**740383**
SNX 3036	**747048**			10X12X300	**713647**	VS0160	**738167**	DK 175	**740384**
SNX 3038	**747049**			10X12X300	**713647**	VS0170	**738169**		

	Spherical roller bearing		Fixing rings			Adapters	
Description	Description	Part No.	Description	Quantity	Part No.	Description	Part No.
SNX 3024	23024EASK.M.C3	**703619**	SR 180X5	2	**747131**	H 3024	**719419**
SNX 3026	23026K.C3	**703628**	SR 200X10	1	**747136**	H 3026	**719420**
SNX 3028	23028EASK.M	**703644**	SR 210X10	1	**747138**	H 3028	**719421**
SNX 3030	23030EASK.M.C3	**703656**	SR 225X10	1	**747142**	H 3030	**719422**
SNX 3032	23032K.C3	**703661**	SR 240X10	1	**747145**	H 3032	**719423**
SNX 3034	23034K.C3	**703670**	SR 260X10	1	**747148**	H 3034	**719425**
SNX 3036	23036K.C3	**703679**	SR 280X10	1	**747150**	H 3036	**053088**
SNX 3038	23038EASK.M.C3	**703689**	SR 290X10	1	**747151**	H 3038	**719429**

DIMENSIONS

SDX 3000

Plummer Blocks for bearings 23000K

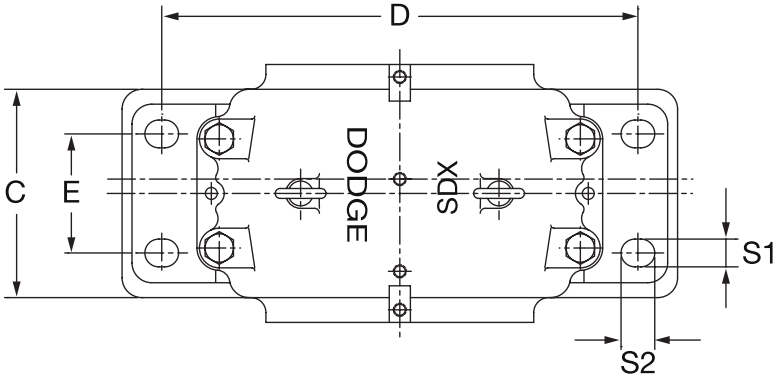

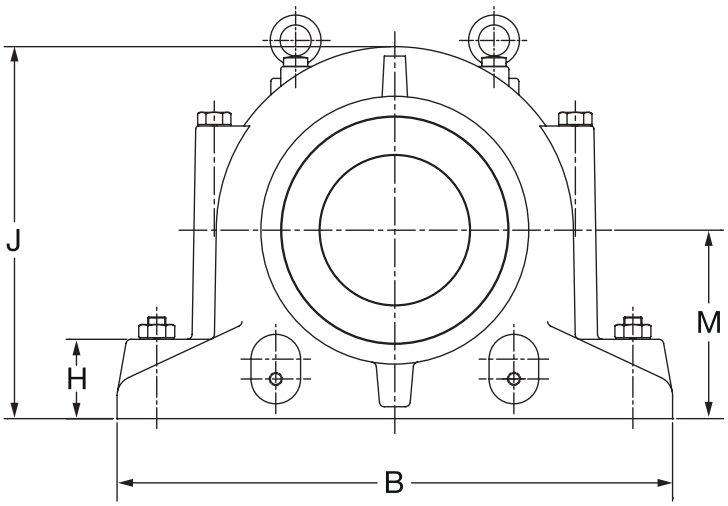

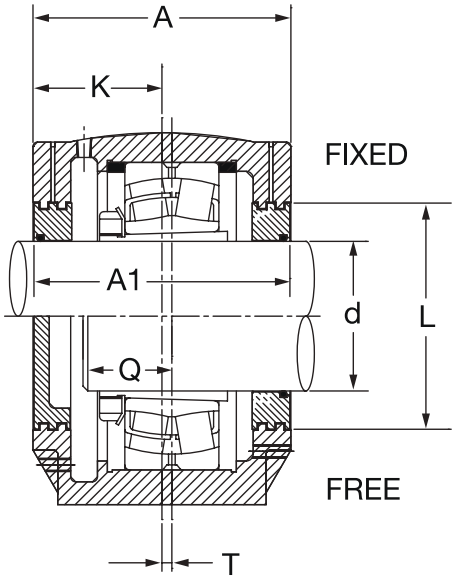

DIMENSIONS

SDX 3000

Dimensions in mm

Description	d	A	B	C	H	D	E	J	M	K	S Bolt Size	S1	S2	Q	T	Labyrinth Seal A1 TS	Labyrinth Seal A1 AUX	Labyrinth Seal L TS	Labyrinth Seal L AUX	Hex Bolt	Mass (kg)
SDX 3040	180	260	560	210	80	480	120	375	190	130	M24	30	42	83	10	260	332	235	235	M20XI50	88
SDX 3044	200	280	610	230	85	510	130	410	210	140	M30	37	51	85	10	280	352	262	262	M24XI80	122
SDX 3048	220	290	640	240	90	540	140	435	220	145	M30	37	51	86	12	290	373	282	282	M24XI80	136
SDX 3052	240	310	700	260	95	600	150	475	240	155	M30	37	51	97	12	310	393	302	302	M24X200	190
SDX 3056	260	320	770	280	100	650	160	515	260	160	M36	43	60	102	13	320	403	324	324	M30X220	238
SDX 3060	280	320	790	280	105	670	160	550	280	160	M36	43	60	112	16	320	403	342	342	M30X220	252
SDX 3064	300	350	830	310	110	710	190	590	300	175	M36	43	60	116	22	350	433	362	362	M30X240	290
SDX 3068	320	370	880	330	115	750	200	630	320	185	M36	43	62	123.5	23	370	453	387	453	M30X240	340

Description	Housing		Spherical Roller Bearing (SRB)		Adapter	
	Description	Part No.	Description	Part No.	Description	Part No.
SDX 3040	SDX 3040	**747800**	23040EASK.M.C3	**703694**	H 3040	**719432**
SDX 3044	SDX 3044	**747801**	23044K.MB.C3	**703711**	H 3044	**719434**
SDX 3048	SDX 3048	**747802**	23048K.MB.C3	**422031**	H 3048	**719437**
SDX 3052	SDX 3052	**747803**	23052K.C3	**703725**	H 3052	**719441**
SDX 3056	SDX 3056	**747804**	23056K.M.C3	**422030**	H 3056	**719443**
SDX 3060	SDX 3060	**747805**	23060K.C3	**703738**	H 3060	**719445**
SDX 3064	SDX 3064	**747806**	23064K.C3	**703739**	H 3064	**719446**
SDX 3068	SDX 3068	**747807**	23068K.C3	**421282**	H 3068	**719448**

Description	Labyrinth TS Seal		Labyrinth AUX Seal (Optional)		End Cover		Fixing Ring *	
	Description	Part No.	Description	Part No.	Description	Part No.	Description	Qty. Required
SDX 3040	TS-40	**747843**	AUX-40	**747854**	EC-40	**747865**	SR310x10	2
SDX 3044	TS-44	**747844**	AUX-44	**747855**	EC-44	**747866**	SR340x10	2
SDX 3048	TS-48	**747845**	AUX-48	**747856**	EC-48	**747867**	SR360x10	2
SDX 3052	TS-52	**747846**	AUX-52	**747857**	EC-52	**747868**	SR400x10	2
SDX 3056	TS-56	**747847**	AUX-56	**747858**	EC-56	**747869**	SR420x10	2
SDX 3060	TS-60	**747848**	AUX-60	**747859**	EC-60	**747870**	SR460x10	2
SDX 3064	TS-64	**747849**	AUX-64	**747860**	EC-64	**747871**	SR480x10	2
SDX 3068	TS-68	**747850**	AUX-68	**747861**	EC-68	**747872**	SR520x10	2

* NOTE: Fixing Rings included with Housing.

DIMENSIONS

SDX 3100

Plummer Blocks for bearings 23100K

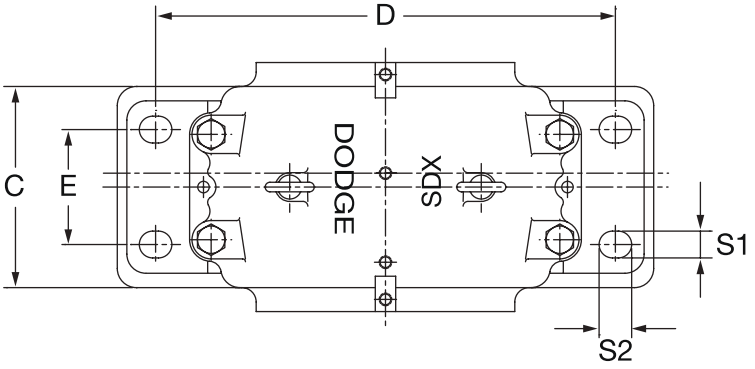

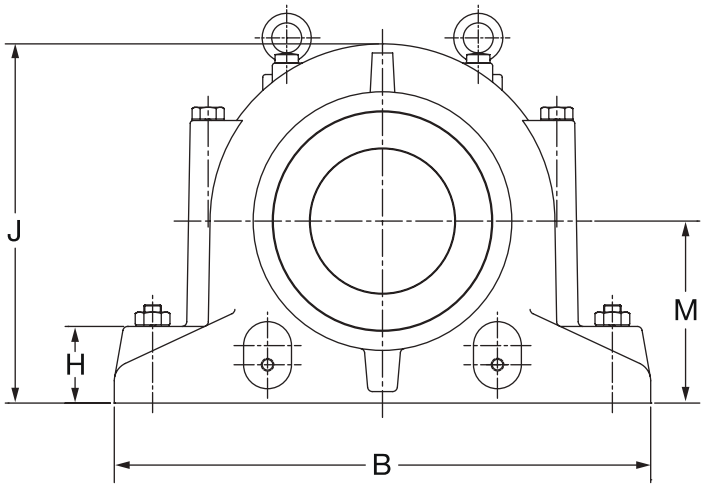

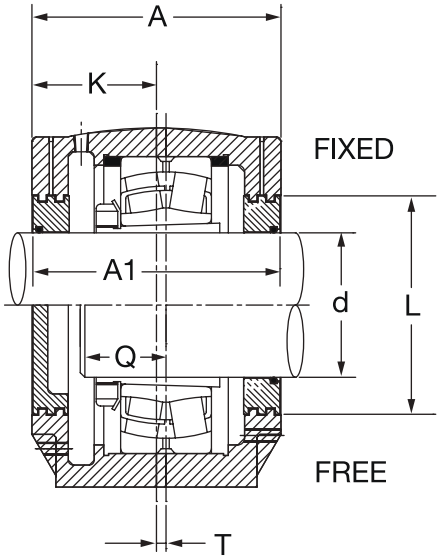

DIMENSIONS

SDX 3100

Dimensions in mm

Description	d	A	B	C	H	D	E	J	M	K	S Bolt Size	S1	S2	Q	T	Labyrinth Seal A1 TS	Labyrinth Seal A1 AUX	Labyrinth Seal L TS	Labyrinth Seal L AUX	Hex Bolt	Mass (kg)
SDX 3134	150	230	510	180	70	430	100	335	170	115	M24	30	42	83	14	230	302	195	195	M20XI50	70
SDX 3136	160	240	530	190	75	450	110	355	180	120	M24	30	42	78	15	240	312	202	202	M20XI50	72
SDX 3138	170	260	560	210	80	480	120	375	190	130	M24	30	42	83	10	260	332	228	228	M20XI50	88
SDX 3140	180	280	610	230	85	510	130	410	210	140	M30	37	51	88	10	280	352	235	235	M24XI80	122
SDX 3144	200	290	640	240	90	540	140	435	220	145	M30	37	51	95	12	290	373	262	262	M24XI80	136
SDX 3148	220	310	700	260	95	600	150	475	240	110	M30	37	51	101	12	310	393	282	282	M24X200	190
SDX 3152	240	320	770	280	100	650	160	515	260	120	M36	43	60	111	13	320	403	302	302	M30X220	238
SDX 3156	260	320	790	280	105	670	160	550	280	130	M36	43	60	114	16	320	403	324	324	M30X220	252
SDX 3160	280	350	830	310	110	710	190	590	300	140	M36	43	60	120	22	350	433	342	342	M30X240	290
SDX 3164	300	370	880	330	115	750	200	630	320	150	M36	43	62	130	23	370	453	362	362	M30X240	340

Description	Housing		Spherical Roller Bearing (SRB)		Adapter	
	Description	Part No.	Description	Part No.	Description	Part No.
SDX 3134	SDX 3134	**747808**	23134K.M.C3	**703831**	H 3134	**046233**
SDX 3136	SDX 3136	**747809**	23136ESKTVPB.C3	**703840**	H 3136	**046234**
SDX 3138	SDX 3138	**747810**	23138K.C3	**703850**	H 3138	**046235**
SDX 3140	SDX 3140	**747811**	23140BK.MB.C3	**421403**	H 3140	**046236**
SDX 3144	SDX 3144	**747812**	23144BK.MB.C3	**703866**	H 3144	**046237**
SDX 3148	SDX 3148	**747813**	23148BK.MB.C3	**703873**	H 3148	**719480**
SDX 3152	SDX 3152	**747814**	23152K.MB.C3	**703890**	H 3152	**719485**
SDX 3156	SDX 3156	**747815**	23156BK.MB.C3	**703892**	H 3156	**719489**
SDX 3160	SDX 3160	**747816**	23160K.C3	**703903**	H 3160	**719491**
SDX 3164	SDX 3164	**747817**	23164K.MB.C3	**421287**	H 3164	**719492**

Description	Labyrinth TS Seal		Labyrinth AUX Seal (Optional)		End Cover		Fixing Ring *	
	Description	Part No.	Description	Part No.	Description	Part No.	Description	Qty. Required
SDX 3134	TS-34	**747840**	AUX-34	**747851**	EC-34	**747862**	SR280x10	2
SDX 3136	TS-36	**747841**	AUX-36	**747852**	EC-36	**747863**	SR300x10	2
SDX 3138	TS-38	**747842**	AUX-38	**747853**	EC-38	**747864**	SR320x10	2
SDX 3140	TS-40	**747843**	AUX-40	**747854**	EC-40	**747865**	SR340x10	2
SDX 3144	TS-44	**747844**	AUX-44	**747855**	EC-44	**747866**	SR370x10	2
SDX 3148	TS-48	**747845**	AUX-48	**747856**	EC-48	**747867**	SR400x10	2
SDX 3152	TS-52	**747846**	AUX-52	**747857**	EC-52	**747868**	SR440x10	2
SDX 3156	TS-56	**747847**	AUX-56	**747858**	EC-56	**747689**	SR460x10	2
SDX 3160	TS-60	**747848**	AUX-60	**747859**	EC-60	**747870**	SR500x10	2
SDX 3164	TS-64	**747849**	AUX-64	**747860**	EC-64	**747871**	SR540x10	2

* NOTE: Fixing Rings included with Housing.

FEATURES/BENEFITS PAGE B16-23	NOMENCLATURE PAGE B16-6	SELECTION PAGE B16-42	DIMENSIONS PAGE B16-42

DIMENSIONS

SDXD 3000

Plummer Blocks for bearings 23000K

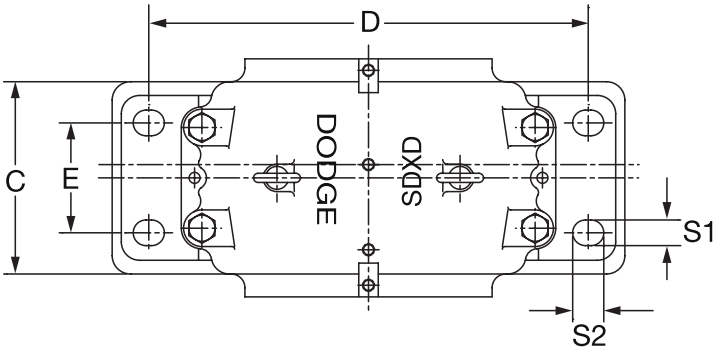

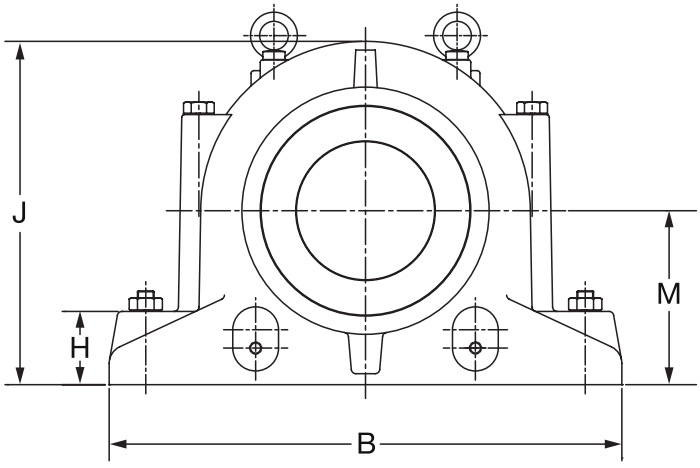

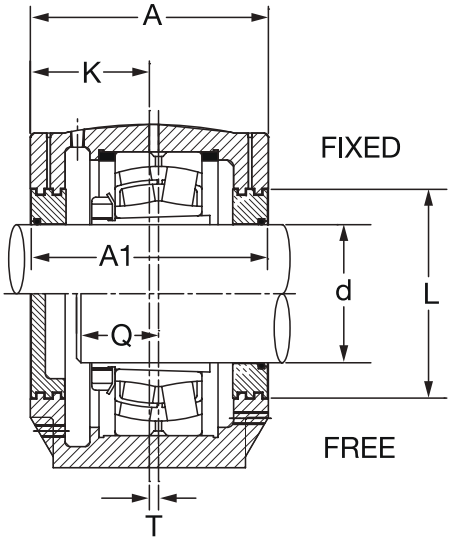

DIMENSIONS

SDXD 3000

Dimensions in mm

Description	d	A	B	C	H	D	E	J	M	K	S Bolt Size	S1	S2	Q	T	Labyrinth Seal A1 TS	Labyrinth Seal A1 AUX	Labyrinth Seal L TS	Labyrinth Seal L AUX	Hex Bolt	Mass (kg)
SDXD 3040	180	260	560	210	80	480	120	375	190	130	M24	30	42	83	10	260	332	235	235	M20Xl50	88
SDXD 3044	200	280	610	230	85	510	130	410	210	140	M30	37	51	85	10	280	352	262	262	M24Xl80	122
SDXD 3048	220	290	640	240	90	540	140	435	220	145	M30	37	51	86	12	290	373	282	282	M24Xl80	136
SDXD 3052	240	310	700	260	95	600	150	475	240	155	M30	37	51	97	12	310	393	302	302	M24X200	190
SDXD 3056	260	320	770	280	100	650	160	515	260	160	M36	43	60	102	13	320	403	324	324	M30X220	238
SDXD 3060	280	320	790	280	105	670	160	550	280	160	M36	43	60	112	16	320	403	342	342	M30X220	252
SDXD 3064	300	350	830	310	110	710	190	590	300	175	M36	43	60	116	22	350	433	362	362	M30X240	290
SDXD 3068	320	370	880	330	115	750	200	630	320	185	M36	43	62	123.5	23	370	453	387	453	M30X240	340

Description	Housing		Spherical Roller Bearing (SRB)		Adapter	
	Description	Part No.	Description	Part No.	Description	Part No.
SDXD 3040	SDXD 3040	**747818**	23040EASK.M.C3	**703694**	H 3040	**719432**
SDXD 3044	SDXD 3044	**747819**	23044K.MB.C3	**703711**	H 3044	**719434**
SDXD 3048	SDXD 3048	**747820**	23048K.MB.C3	**422031**	H 3048	**719437**
SDXD 3052	SDXD 3052	**747821**	23052K.C3	**703725**	H 3052	**719441**
SDXD 3056	SDXD 3056	**747822**	23056K.M.C3	**422030**	H 3056	**719443**
SDXD 3060	SDXD 3060	**747823**	23060K.C3	**703738**	H 3060	**719445**
SDXD 3064	SDXD 3064	**747824**	23064K.C3	**703739**	H 3064	**719446**
SDXD 3068	SDXD 3068	**747825**	23068K.C3	**421282**	H 3068	**719448**

Description	Labyrinth TS Seal		Labyrinth AUX Seal (Optional)		End Cover		Fixing Ring *	
	Description	Part No.	Description	Part No.	Description	Part No.	Description	Qty. Required
SDXD 3040	TS-40	**747843**	AUX-40	**747854**	EC-40	**747865**	SR310x10	2
SDXD 3044	TS-44	**747844**	AUX-44	**747855**	EC-44	**747866**	SR340x10	2
SDXD 3048	TS-48	**747845**	AUX-48	**747856**	EC-48	**747867**	SR360x10	2
SDXD 3052	TS-52	**747846**	AUX-52	**747857**	EC-52	**747868**	SR400x10	2
SDXD 3056	TS-56	**747847**	AUX-56	**747858**	EC-56	**747869**	SR420x10	2
SDXD 3060	TS-60	**747848**	AUX-60	**747859**	EC-60	**747870**	SR460x10	2
SDXD 3064	TS-64	**747849**	AUX-64	**747860**	EC-64	**747871**	SR480x10	2
SDXD 3068	TS-68	**747850**	AUX-68	**747861**	EC-68	**747872**	SR520x10	2

* NOTE: Fixing Rings included with Housing.

DIMENSIONS

SDXD 3100

Plummer Blocks for bearings 23100K

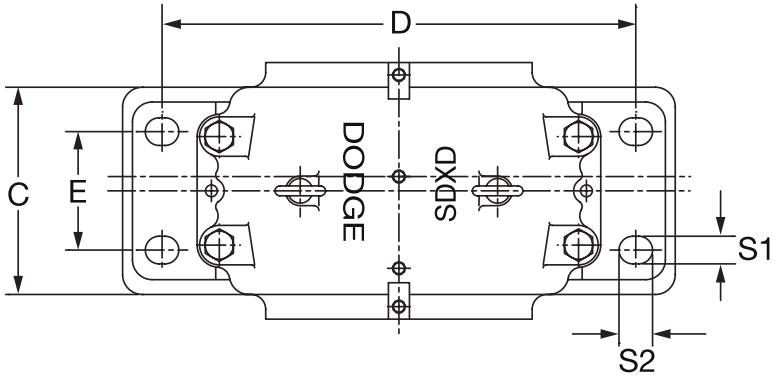

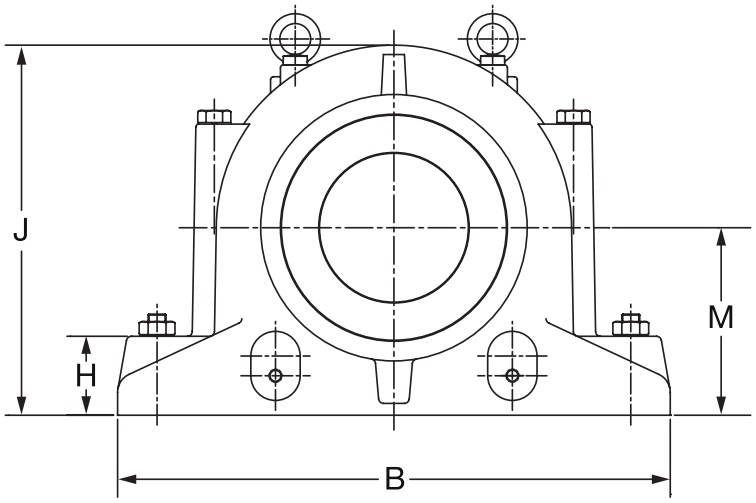

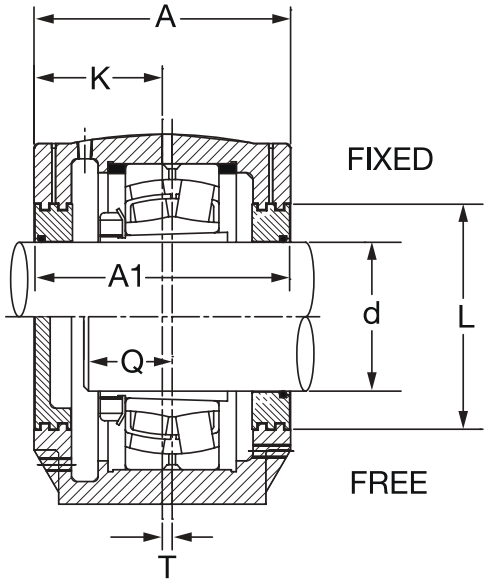

DIMENSIONS

SDXD 3100

Dimensions in mm

Description	d	A	B	C	H	D	E	J	M	K	S Bolt Size	S1	S2	Q	T	Labyrinth Seal A1 TS	Labyrinth Seal A1 AUX	Labyrinth Seal L TS	Labyrinth Seal L AUX	Hex Bolt	Mass (kg)
SDXD 3134	150	230	510	180	70	430	100	335	170	115	M24	30	42	83	14	230	302	195	195	M20XI50	70
SDXD 3136	160	240	530	190	75	450	110	355	180	120	M24	30	42	78	15	240	312	202	202	M20XI50	72
SDXD 3138	170	260	560	210	80	480	120	375	190	130	M24	30	42	83	10	260	332	228	228	M20XI50	88
SDXD 3140	180	280	610	230	85	510	130	410	210	140	M30	37	51	88	10	280	352	235	235	M24XI80	122
SDXD 3144	200	290	640	240	90	540	140	435	220	145	M30	37	51	95	12	290	373	262	262	M24XI80	136
SDXD 3148	220	310	700	260	95	600	150	475	240	110	M30	37	51	101	12	310	393	282	282	M24X200	190
SDXD 3152	240	320	770	280	100	650	160	515	260	120	M36	43	60	111	13	320	403	302	302	M30X220	238
SDXD 3156	260	320	790	280	105	670	160	550	280	130	M36	43	60	114	16	320	403	324	324	M30X220	252
SDXD 3160	280	350	830	310	110	710	190	590	300	140	M36	43	60	120	22	350	433	342	342	M30X240	290
SDXD 3164	300	370	880	330	115	750	200	630	320	150	M36	43	62	130	23	370	453	362	362	M30X240	340

Description	Housing		Spherical Roller Bearing (SRB)		Adapter	
	Description	Part No.	Description	Part No.	Description	Part No.
SDXD 3134	SDXD 3134	**747826**	23134K.M.C3	**703831**	H 3134	**046233**
SDXD 3136	SDXD 3136	**747827**	23136ESKTVPB.C3	**703840**	H 3136	**046234**
SDXD 3138	SDXD 3138	**747828**	23138K.C3	**703850**	H 3138	**046235**
SDXD 3140	SDXD 3140	**747829**	23140BK.MB.C3	**421403**	H 3140	**046236**
SDXD 3144	SDXD 3144	**747830**	23144BK.MB.C3	**703866**	H 3144	**046237**
SDXD 3148	SDXD 3148	**747831**	23148BK.MB.C3	**703873**	H 3148	**719480**
SDXD 3152	SDXD 3152	**747832**	23152K.MB.C3	**703890**	H 3152	**719485**
SDXD 3156	SDXD 3156	**747833**	23156BK.MB.C3	**703892**	H 3156	**719489**
SDXD 3160	SDXD 3160	**747834**	23160K.C3	**703903**	H 3160	**719491**
SDXD 3164	SDXD 3164	**747835**	23164K.MB.C3	**421287**	H 3164	**719492**

Description	Labyrinth TS Seal		Labyrinth AUX Seal (Optional)		End Cover		Fixing Ring *	
	Description	Part No.	Description	Part No.	Description	Part No.	Description	Qty. Required
SDXD 3134	TS-34	**747840**	AUX-34	**747851**	EC-34	**747862**	SR280x10	2
SDXD 3136	TS-36	**747841**	AUX-36	**747852**	EC-36	**747863**	SR300x10	2
SDXD 3138	TS-38	**747842**	AUX-38	**747853**	EC-38	**747864**	SR320x10	2
SDXD 3140	TS-40	**747843**	AUX-40	**747854**	EC-40	**747865**	SR340x10	2
SDXD 3144	TS-44	**747844**	AUX-44	**747855**	EC-44	**747866**	SR370x10	2
SDXD 3148	TS-48	**747845**	AUX-48	**747856**	EC-48	**747867**	SR400x10	2
SDXD 3152	TS-52	**747846**	AUX-52	**747857**	EC-52	**747868**	SR440x10	2
SDXD 3156	TS-56	**747847**	AUX-56	**747858**	EC-56	**747689**	SR460x10	2
SDXD 3160	TS-60	**747848**	AUX-60	**747859**	EC-60	**747870**	SR500x10	2
SDXD 3164	TS-64	**747849**	AUX-64	**747860**	EC-64	**747871**	SR540x10	2

* NOTE: Fixing Rings included with Housing.

NOTES

CONTENTS

Sleeve Bearings

Features / Benefits B17-2
Specification/How To Order B17-4
Nomenclature B17-5
Selection
- SOLIDLUBE® - Inch B17-6
- SOLIDLUBE® - Metric. B17-8
- Babbitted and Bronze-Bushed. B17-34
- BRONZOIL® B17-54

Dimensions
- SOLIDLUBE® B17-10
- Babbitted B17-38
- Bronze - Bushed. B17-50
- BRONZOIL® B17-55
- Shaft Collars B17-57

Part Number Index INDEX-1
Key Word Index. KEYWORD-1

FEATURES/BENEFITS

Sleeve Bearings

SOLIDLUBE . . . . . .

Self-Lubricating, Statically Self-Aligning Bearings for Extreme Industrial Applications



- Good in temperature extremes and inaccessible locations.
- Will function effectively in a vacuum.
- Ideal where bearings are subject to dry cycles or where lube systems would be too costly.
- Usable in many corrosive (chemical) medias.
- Will operate in submersible applications of some low viscosity liquids.
- Recommended for slow speeds and limited shaft movement applications.

BRONZOIL . . . . . .



- Self Oiling Bushing Feeds Oil to Shaft
- Split Pressed Steel Housing
- Statically Self-Aligning
- Bushing Shoulder Provides Self-Lubricating Bearing Thrust Surface
- Slotted Bolt Holes
- Oil Resistant Rubber Grommets Available for Sound Isolation and Static Electricity Protection

FEATURES/BENEFITS

Sleeve Bearings
BABBITTED AND BRONZE-BUSHED BEARINGS . . . . . .



GOOD FOR SLOW SPEEDS AND SHOCK LOADS

- MPTA LOAD RATINGS
- Cast Iron Housings
- 2 and 4 Bolt Housings



Babbitted

- Solid or Fully Split Housing
- Babbitted Bearing Surface

Bronzed-Bushed

- Fully Split Housing
- Replaceable Split Bronze Bushings
- Brass Locking Spool for Easy Bushing Replacement

SPECIFICATION/ HOW TO ORDER



Sleeve Bearings

HOW TO ORDER SLEEVE BEARINGS

There are two ways to specify DODGE Sleeve Bearings. Most of the product offering have part numbers with listings shown throughout this catalog. Use of part numbers ensures accurate order processing.

When part numbers are not shown, the product may be specified by description or part name. This method is used when ordering units that include modifications or options. To order by description, use the nomenclature key shown on page B17-5 and add any special instructions to the end of the description for options not covered by the nomenclature.

SOLIDLUBE

Statically self-aligning, non-galling, solid-film lubricating for temperature extremes.

- 700 Series: -40° to 700°F
- 1000 Series: -200° to -40°F; 250°F to 1,000°F
- 800 Series: -40° to 800°F

Also suitable for submerged and limited movement applications.

Babbitted

Grease lubricated for moderate speeds and loads, ambient temperature to 130°F, babbitt accurately bored to insure even load distribution for conveyor shafts, heavy gear, and chain drives use.

Bronze-Bushed

Grease lubricated for moderate speeds, ambient temperature to 300°F and heavy loads or shock loads make the advantage of a precision replaceable bronze bushing desirable. Other bushing material is available on a special order basis, such as bronze with graphite plugs, or phenolic resin on nylon.

BRONZOIL

Economical, statically self-aligning, and self-lubricating pillow blocks and four-bolt flange units for fans, light machinery, and other general use; ambient temperature to 180°F.



Sleeve Bearings
SLEEVE BEARING NOMENCLATURE

P2B - LT7 - 108 - SH

MODIFICATIONS/FEATURES:
SH Stainless Steel Housing (Available with SOLIDLUBE LT Series Only)

HOUSINGS:

P2B	Pillow Block, 2 Bolt Base
P4B	Pillow Block, 4 Bolt Base
F2B	Flange, 2 Bolt
F4B	Flange, 4 Bolt
HNG	Hanger Bearing
NSTU	Narrow Slot Take-Up
SCHB	Screw Conveyor Hanger Bearing
WSTU	Wide Slot Take-Up
TB	Tapped Base
FB	Flanged Bracket

STYLE:

BO	BRONZOIL
BASO	Babbitted Solid
BASP	Babbitted Split
BAR	Babbitted Rigid
BAA	Babbitted Angle
BAP	Babbitted Plate
BZSP	Bronze Bushed Split
BZR	Bronze Bushed Rigid
LT7	SOLIDLUBE LT700 Series
LT10	SOLIDLUBE LT 1000 Series
LTB7	SOLIDLUBE Lower Backing Height On Pillow Blocks For LT700 Series
LTB10	SOLIDLUBE Lower Backing Height On Pillow Blocks For LT1000 Series
LM8	SOLIDLUBE LM800 Series
MM7	SOLIDLUBE MM700 Series
MM10	SOLIDLUBE MM1000 Series

SHAFT SIZE:

115	First Digit: Number Of Inches Second And Third Digit: Sixteenths Of An Inch 115 Indicates 1-15/16
50M	FIRST TWO DIGITS: Bore In Millimeters; M : Indicates Metric Dimension

SELECTION

Sleeve Bearings - SOLIDLUBE - Inch

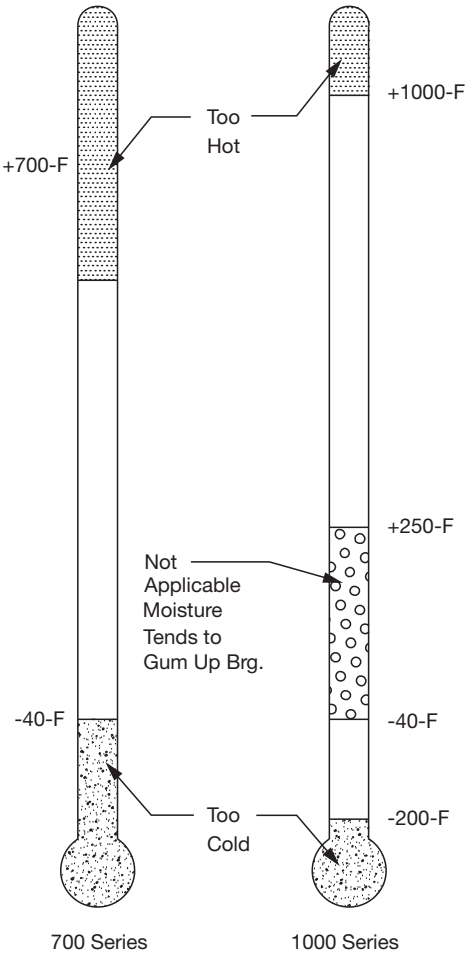

SOLIDLUBE Bearing Operating Temperature

Bearing Size

Select a bearing from tables for normal loads or loads in limited shaft movement applications having a radial load equal to or greater than the actual load. This simple method is all that is required for the majority of general machine applications using commercial steel shafting and operating in a dry atmosphere. (For more favorable conditions, ratings may be increased somewhat; consult factory). Shaft collars may be used for slight amounts of thrust. Generally the rule of 10% of the radial load applies. Dirty environments will reduce bearing life and should be avoided. Losses due to friction can be as high as 30% depending on speed, lead, temperature and shaft material.

Shafting

Commercial steel shafting is good in applications where temperatures do not exceed 700°F. However, for extended bearing life, at any temperature, the shaft should be hardened to 35 Rockwell "C" or better. Shaft finish should be 10 to 20 micro-inches. A finish rougher than 20µ will lessen bearing life. A finish smoother than 10 will not allow the optimum lubricant film to develop. Shaft tolerance should be +.000/-.002 for commercial steel shafting. If using other shaft materials, consult DODGE for the shaft tolerance and thermal expansion.

When commercial shafting is exposed to a corrosive media, it will oxidize. A rusty shaft will grow in the bearing, thus eliminating clearances. In this case stainless steel shafting may be used and/or provide for regularly scheduled movement of shaft. In elevated temperatures stainless grades such as 17-4, 15-5, or 13-8 are hardenable. Shafts can be spray coated with ceramic or hard chrome. This is good up to about 800°F. Check with your supplier, since these coatings can flake off when the coefficient of thermal expansion of the base material differs greatly from that of the coating.

High grade specialty shafting may be used in excess of 1000°F. It may be less expensive to use sleeves of this material on more economical shafting.

Noise or High Pitched Squeal

Carbon-graphite bushings can develop a high frequency vibration in resonance with the operating system to cause noise. Dampening or change of resonant frequency of the shaft is required to eliminate noise.

Specials

SOLIDLUBE bearings or bearings made from alternate bushing materials such as polymers, fibers, bronze, etc. for unusual operating and load conditions are available on a specially engineered basis by supplying the following:

- Shaft size, material and rpm.
- Normal load, shock load and frequency.
- Direction of load.
- Ambient temperature and atmospheric conditions (water, dirt, corrosive, etc.)
- Type of bearing: pillow block, flange bearing, etc.
- Housing material desired.
- Quantity.

End Closures

Ball Bearing End Closures are available (B4-102).

Note: SOLIDLUBE bearings are not designed for rotating housing applications

DODGE



Sleeve Bearings - SOLIDLUBE - Inch

SOLIDLUBE 700, 1000 and 800 Series

SOLIDLUBE Bearing 700 and 1000 Series Radial Load Ratings in Pounds (Normal Loads)

Shaft Size	Radial Load Ratings in Pounds at various Revolutions per Minute											
	Up to 10	25	50	75	100	150	200	250	300	350	400	450
3/4	560	560	560	560	560	380	285	230	190	165	145	125
7/8, 15/16, 1	750	750	750	750	610	405	315	245	205	175	155	130
1-1/8, 1-3/16	1050	1050	1050	908	680	450	340	270	225	190	170	150
1-1/4, 1-3/8, 1-7/16, 1-1/2	1610	1610	1610	1140	855	570	430	340	280	245	215	190
1-11/16, 1-3/4	1980	1980	1790	1190	895	595	440	390	295	255	220	200
1-15/16, 2	2360	2360	1860	1240	930	620	465	370	310	265	235	205
2-3/16	2870	2870	2010	1340	1000	670	500	400	335	285	250	225
2-7/16, 2-1/2	3760	3760	2360	1580	1180	795	590	475	390	340	295	265
2-15/16, 3	5970	5970	3120	2070	1560	1040	780	625	515	445	390	345
3-7/16, 3-1/2	9100	8010	4000	2670	2000	1340	1000	800	670	570	500	445
3-15/16, 4	11800	9160	4590	3060	2290	1530	1150	930	765	665	575	510
4-7/16, 4-1/2	15200	10300	5150	3440	2580	1720	1290	1030	860	740	645	...
4-15/16, 5	18400	11400	5710	3810	2860	1910	1430	1140	955	815	...	...

Shaft Size	500	550	600	700	800	900	1000	1100	1300	1600	1900	2200	2500
3/4	110	105	96	82	72	64	57	52	44	35	30	26	22
7/8, 15/16, 1	120	110	105	90	80	70	60	54	47	38	32		
1-1/8, 1-3/16	135	125	115	97	85	75	68	62	42	42			
1-1/4, 1-3/8, 1-7/16, 1-1/2	170	155	145	120	105	95	86	78	66				
1-11/16, 1-3/4	180	165	150	130	110	99	89	81					
1-15/16, 2	185	170	155	135	115	105							
2-3/16	200	180	165	145	125								
2-7/16, 2-1/2	235	215	195	170									
2-15/16, 3	345	315	290										
3-7/16, 3-1/2	400	365											

NOTE: The above ratings apply to all base loaded pillow blocks, all cylindrical units and flange type bearings (up to 700°F). For flange bearings operating at temperatures above 700°F, cap and side loading of pillow blocks consult Application Engineering. For operations speeds below heave line, use LT1000 and/or hardened shaft.

SOLIDLUBE Bearing Corrosion (Chemical) Resistance

Type of Chemical	Chemical	Bearing Series	
		LM800 700	1000
Acids and Acidic Solutions	Mineral (Non-Oxidizing)	★	★
	Mineral (Oxidizing)	■	★
	Inorganic Salts (Acid Forming)	★	★
	Organic (Strong)	★	★
	Organic (Weak) pH 3-7	★	★
	Organic Salts (Acid Forming)	★	★
Alkalis (Bases & Alkaline Solutions)	Mineral (Non-Oxidizing)	★	★
	Mineral (Oxidizing)	▲	★
	Inorganic Salts (Base Forming)	★	★
	Organic (Strong)	★	★
	Weak Organic Bases pH 7-11	★	★
Gases	Acid	★	★
	Alkaline (base)	★	★
	Anhydrous (dew Point below -30˚F)	▲	▲
	Cyrogenic (Liquefied)	■	▲
	Inert	★	★
	Oxidizing	■	▲
	Reducing	★	★
Salts	Acid Salts	▲	▲
	Alkaline Sales	▲	▲
	Metals	★	★
	Neutral Salts	■	▲
	Neutral Salt Solutions	★	★
Solvents	Aliphatic	★	★
	Aromatic	★	★
	Chlorinated, Fluorinated	★	★
	Oxygenated, Sulfides	★	★

★ Good. Not known interaction; compatible
▲ Questionable (depends on conditions)
■ Not recommended

Note: For compatibility or specific chemical, contact Application Engineering

700 and 1000 Series SOLIDLUBE Bearing Radial Load Rating in Pounds (Limited Shaft Movement Applications) ▲

Shaft Size	Max. Radial Load		Max. Thrust
	Base Loaded	Cap or Side Loading	
3/4	1100	775	56
7/8, 15/16, 1	1500	795	75
1-1/8, 1-3/16	2100	820	105
1-1/4, 1-3/8, 1-7/16, 1-1/2	3200	1710	161
1-11/16, 1-3/4	4000	1905	198
1-15/16, 2	4700	1920	236
2-3/16	5700	1900	287
2-7/16, 2-1/2	7500	2360	376
2-15/16, 3	12,000	4151	597

▲ Use only when shaft movement is limited to approx. ±90º. Movement is infrequent as opposed to continuous and maximum bearing temperature is 700ºF.

LM800 Radial Load Ratings

Bearing Size	Max. Radial Base Load	Max. Radial Cap Load
3/4	560	560
1	750	600
1-1/4	1610	600
1-1/2	1610	600

Note: These load ratings are to be used only when shaft rotation is less than 10 RPM and temperature does not exceed 800º F. Maximum allowable thrust load is 50 lbs.

FEATURES/BENEFITS PAGE B17-2	SPECIFICATION/HOW TO ORDER PAGE B17-4	NOMENCLATURE PAGE B17-5	SELECTION/DIMENSIONS PAGE B17-10

SELECTION

Sleeve Bearings - SOLIDLUBE - Metric

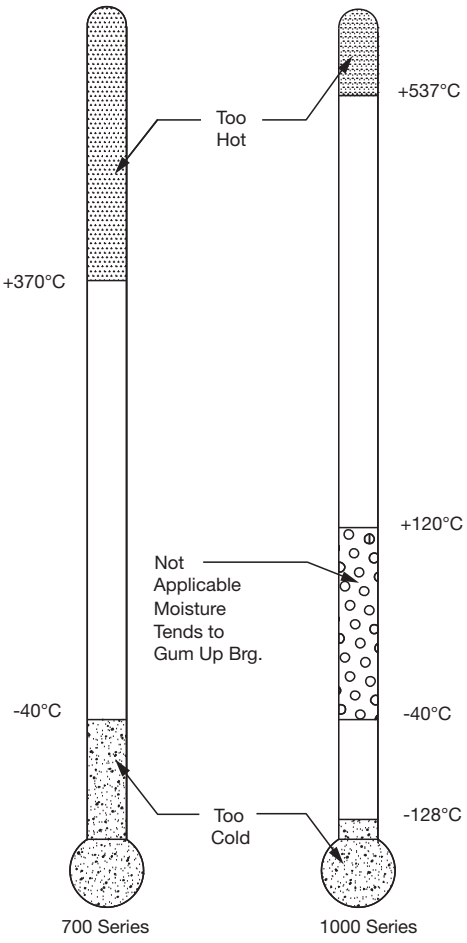

SOLIDLUBE Bearing Operating Temperature

Bearing Size

Select a bearing from tables for normal loads or loads in limited shaft movement applications having a radial load equal to or greater than the actual load. This simple method is all that is required for the majority of general machine applications using commercial steel shafting and operating in a dry atmosphere. (For more favorable conditions, ratings may be increased somewhat; consult factory). Shaft collars may be used for slight amounts of thrust. Generally the rule of 10% of the radial load applies. Dirty environments will reduce bearing life and should be avoided. Losses due to friction can be as high as 30% depending on speed, load, temperature and shaft material.

Shafting

Commercial steel shafting is good in applications where temperatures do not exceed 370°C. However, for extended bearing life, at any temperature, the shaft should be hardened to 35 Rockwell "C" or better. Shaft finish should be .25 to .50 micro-meters. A finish rougher than .50 will lessen bearing life. A finish smoother than R_a. 25 micro-meters will not allow the optimum lubricant film to develop. Shaft tolerance should be +.000/-.051 millimeters for commercial steel shafting. If using other shaft materials, consult DODGE for the shaft tolerance and thermal expansion.

When commercial shafting is exposed to a corrosive media, it will oxidize. A rusty shaft will grow in the bearing, thus eliminating clearances. In this case stainless steel shafting may be used and/or provide for regularly scheduled movement of shaft. In elevated temperatures stainless grades such as 17-4, 15-5, or 13-8 are hardenable. Shafts can be spray coated with ceramic or hard chrome. This is good up to about 425°C. Check with your supplier, since these coatings can flake off when the coefficient of thermal expansion of the base material differs greatly from that of the coating.

High grade specialty shafting may be used in excess of 537°C. It may be less expensive to use sleeves of this material on more economical shafting.

Noise or High Pitched Squeal

Carbon-graphite bushings can develop a high frequency vibration in resonance with the operating system to cause noise. Dampening or change of resonant frequency of the shaft is required to eliminate noise.

Specials

SOLIDLUBE bearings or bearings made from alternate bushing materials such as polymers, fibers, bronze, etc. for unusual operating and load conditions are available on a specially engineered basis by supplying the following:

- Shaft size, material and rpm.
- Normal load, shock load and frequency.
- Direction of load.
- Ambient temperature and atmospheric conditions (water, dirt, corrosive, etc.)
- Type of bearing: pillow block, flange bearing, etc.
- Housing material desired.
- Quantity.

End Closures

Ball Bearing End Closures are available (Page B4-102).

Note: SOLIDLUBE bearings are not designed for rotating housing applications



Sleeve Bearings - SOLIDLUBE - Metric

SOLIDLUBE BEARING 700 and 1000 SERIES

SOLIDLUBE Bearing 700 and 1000 Series Radial Load Ratings in Newtons (N) Normal Loads

Series	Shaft Size	Radial Load Ratings in Newtons at Various Revolutions per Minute											
		10	25	50	75	100	150	200	250	300	350	400	450
204	20mm	2490	2490	2490	2490	2490	1690	1270	1020	840	730	640	560
205	25mm	3340	3340	3340	3340	2710	1800	1400	1090	910	780	690	580
206	30mm	4670	4670	4670	4040	3020	2000	1510	1200	1000	840	760	670
207	35mm	7160	7160	7160	5070	3800	2540	1910	1510	1240	1090	960	840
209	40mm, 45mm	8800	8800	7960	5290	3980	2650	1960	1740	1310	1130	980	890
210	50mm	10500	10500	8270	5520	4140	2760	2070	1650	1380	1180	1040	910
212	60mm	16700	16700	10500	7030	5250	3540	2620	2110	1730	1510	1310	1180
215	70mm, 75mm	26500	26500	13900	9200	6940	4630	3470	2780	2290	1980	1740	1540

Series	Shaft Size	Radial Load Ratings in Newtons at Various Revolutions per Minute												
		500	550	600	700	800	900	1000	1100	1300	1600	1900	2200	2500
204	20mm	490	470	430	360	320	200	250	230	200	160	130	120	100
205	25mm	530	490	470	400	360	310	270	240	210	170	140		. ..
206	30mm	600	560	510	430	380	330	300	280	190	190		. .	.
207	35mm	760	690	640	530	470	420	380	350	300	. .	.	. .	.
209	40mm, 45mm	800	730	670	580	490	440	400	360	. . .	. .	.	. .	.
210	50mm	820	760	690	600	510	470	. . .	. . .	. . .	. .	.	. .	.
212	60mm	1040	960	870	760	. . .	. . .	. . .	. . .	. . .	. .	.	. .	.
215	70mm, 75mm	1530	1400	1290	. . .	. . .	. . .	. . .	. . .	. . .	. .	.	. .	.

NOTE: The above ratings apply to all base loaded pillow blocks, all cylindrical units an flange type bearings (up to 370°C). For flange bearings operating at temperatures above 370°C, cap and side loading of pillow blocks consult Applications Engineering. For operation speeds below heavy line, use LT1000 and/or hardened shaft.

SOLIDLUBE Bearings
700 Series and 1000 Series
Radial Load Ratings in Newtons (N)
(Limited Shaft Movement Applications) ▲

Series	Shaft Size	Max. Radial Load		Max. Thrust Load
		Base Loaded	Cap or Side Loading	
204	20mm	4890	3450	250
205	25mm	6670	3540	330
206	30mm	9340	3650	470
207	35mm	14200	7600	720
209	40mm, 45mm	17800	8470	880
210	50mm	20900	8540	1050
212	60mm	33400	10500	1670
215	70mm, 75mm	53400	18500	2660

▲ Use only when shaft movement is Limited to approx. ± 90º
Movement is infrequent as opposed to continuous and maximum bearing temperature is 370ºC.

SELECTION/DIMENSIONS

Sleeve Bearings - SOLIDLUBE

3/4" THRU 3" SOLIDLUBE LT PILLOW BLOCKS

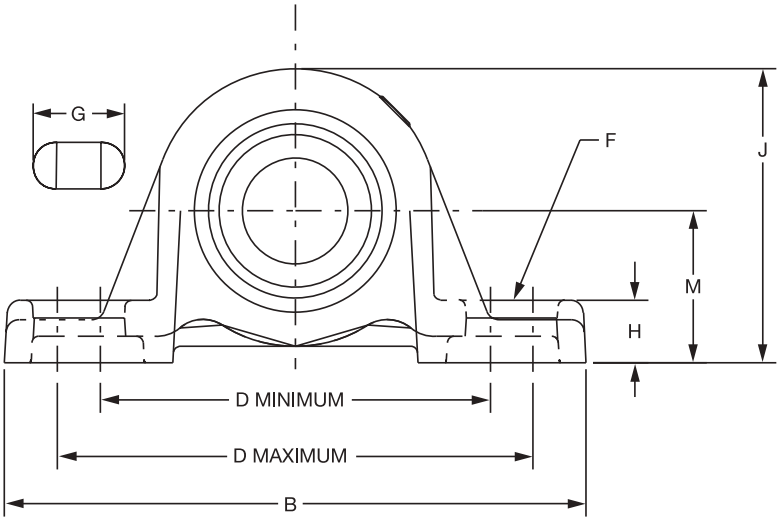

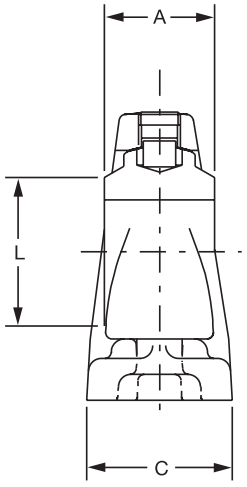

Series	Shaft Size	700 SERIES			1000 SERIES			Used on Frame
		Part Number	Description	Wt.	Part Number	Description	Wt.	
204	3/4	**033667**	P2B-LT7-012	1.70	**033977**	P2B-LT10-012	1.70	LD-10
	20mm	***034225***	*P2B-LT7-20M*	*0.77*	***034234***	*P2B-LT10-20M*	*0.77*	*LD-10*
205	7/8	**033668**	P2B-LT7-014	1.60	**033978**	P2B-LT10-014	1.60	LD-10
	15/16	**033669**	P2B-LT7-015	1.50	**033979**	P2B-LT10-015	1.50	
	1	**033670**	P2B-LT7-100	1.40	**033980**	P2B-LT10-100	1.40	
	25mm	***034226***	*P2B-LT7-25M*	*0.64*	***034235***	*P2B-LT10-25M*	*0.64*	*LD-10*
206	1-1/8	**033672**	P2B-LT7-102	2.80	**033982**	P2B-LT10-102	2.80	LD-20
	1-3/16	**033673**	P2B-LT7-103	2.70	**033983**	P2B-LT10-103	2.70	
	30mm	***034227***	*P2B-LT7-30M*	*1.22*	***034236***	*P2B-LT10-30M*	*1.22*	*LD-20*
207	1-1/4	**033674**	P2B-LT7-104	4.20	**033984**	P2B-LT10-104	4.20	LD-20
	1-3/8	**033676**	P2B-LT7-106	3.90	**033986**	P2B-LT10-106	3.90	
	1-7/16	**033677**	P2B-LT7-107	3.80	**033987**	P2B-LT10-107	3.80	
	1-1/2	**033678**	P2B-LT7-108	3.70	**033988**	P2B-LT10-108	3.70	
	35mm	***034228***	*P2B-LT7-35M*	*1.77*	***034237***	*P2B-LT10-35M*	*1.77*	*LD-20*
209	1-11/16	**033680**	P2B-LT7-111	6.00	**033990**	P2B-LT10-111	6.00	LD-20
	1-3/4	**033681**	P2B-LT7-112	5.80	**033991**	P2B-LT10-112	5.80	
	40mm	***034229***	*P2B-LT7-40M*	*2.72*	***034238***	*P2B-LT10-40M*	*2.72*	*LD-20*
	45mm	***034230***	*P2B-LT7-45M*	*2.63*	***034239***	*P2B-LT10-45M*	*2.63*	
210	1-15/16	**033682**	P2B-LT7-115	6.80	**033992**	P2B-LT10-115	6.80	LD-30
	2	**033683**	P2B-LT7-200	6.60	**033993**	P2B-LT10-200	6.60	
	50mm	***034231***	*P2B-LT7-50M*	*3.08*	***034240***	*P2B-LT10-50M*	*3.08*	*LD-30*
211	2-3/16	**033684**	P2B-LT7-203	8.00	**033994**	P2B-LT10-203	8.00	LD-40
212	2-7/16	**033686**	P2B-LT7-207	10.10	**033996**	P2B-LT10-207	10.10	LD-40
	2-1/2	**033687**	P2B-LT7-208	9.80	**033997**	P2B-LT10-208	9.80	
	60mm	***034221***	*P2B-LT7-60M*	*4.58*	***034241***	*P2B-LT10-60M*	*4.58*	*LD-40*
215	2-15/16	**033688**	P2B-LT7-215	21.20	**033998**	P2B-LT10-215	21.20	LD-45
	3	**033077**	P2B-LT7-300	20.90	**033974**	P2B-LT10-300	20.90	
	70mm	***034232***	*P2B-LT7-70M*	*9.98*	***034242***	*P2B-LT10-70M*	*9.98*	*LD-45*
	75mm	***034233***	*P2B-LT7-75M*	*9.62*	***034243***	*P2B-LT10-75M*	*9.62*	

FEATURES/BENEFITS PAGE B17-2	SPECIFICATION/HOW TO ORDER PAGE B17-4	NOMENCLATURE PAGE B17-5	SELECTION PAGE B17-6



Sleeve Bearings - SOLIDLUBE

3/4" THRU 3" SOLIDLUBE LT PILLOW BLOCKS

Series	Shaft Size	A	B	C	D		F	G	H	J	L	M
					Min.	Max.	Bolt Dia.					
204	3/4	1	5-1/4	1-11/32	3-3/8	4-3/16	3/8	27/32	17/32	2-9/16	1-3/8	1-5/16
	20mm	*25.4*	*133.4*	*34.1*	*85.7*	*106.4*	*10*	*21.4*	*13.5*	*65.1*	*34.9*	*33.3*
205	7/8 15/16 1	1-1/16	5-1/2	1-13/32	3-11/16	4-1/2	3/8	27/32	19/32	2-25/32	1-9/16	1-7/16
	25mm	*27.0*	*139.7*	*35.7*	*93.7*	*114.3*	*10*	*21.4*	*15.1*	*70.6*	*39.7*	*36.5*
206	1-1/8 1-3/16	1-3/16	6-1/4	1-3/4	4-1/4	5	1/2	15/16	11/16	3-1/4	1-13/16	1-5/8
	30mm	*30.2*	*158.8*	*44.5*	*108.0*	*127.0*	*12*	*23.8*	*17.5*	*82.6*	*46.0*	*41.3*
207	1-1/4 1-3/8 1-7/16 1-1/2	1-5/16	6-1/2	1-3/4	4-11/16	5-7/16	1/2	15/16	23/32	3-3/4	2-1/8	1-7/8
	35mm	*33.3*	*165.1*	*44.5*	*119.1*	*138.1*	*12*	*23.8*	*18.3*	*95.3*	*54.0*	*47.6*
209	1-11/16 1-3/4 *40mm* *45mm*	1-9/16	7-7/16	2	5-1/2	6-3/16	1/2	29/32	3/4	4-9/32	2-9/16	2-1/8
		39.7	*188.9*	*50.8*	*139.7*	*157.2*	*12*	*23.0*	*19.1*	*108.7*	*65.1*	*54.0*
210	1-15/16 2	1-5/8	8-1/8	2-1/4	6	6-11/16	5/8	1-1/32	3/4	4-17/32	2-13/16	2-1/4
	50mm	*41.3*	*206.4*	*57.1*	*152.4*	*170.0*	*16*	*26.2*	*19.1*	*115.1*	*71.4*	*57.2*
211	2-3/16	1-3/4	8-7/8	2-5/16	6-3/8	7-7/16	5/8	1-7/32	7/8	4-31/32	3-1/8	2-1/2
212	2-7/16 2-1/2	1-13/16	9-1/2	2-3/8	6-7/8	7-15/16	5/8	1-7/32	7/8	5-13/32	3-1/2	2-3/4
	60mm	*46.0*	*241.3*	*60.3*	*174.6*	*201.6*	*16*	*31.0*	*22.2*	*137.3*	*88.9*	*69.9*
215	2-15/16 3 *70mm* *75mm*	2-23/32	11-3/4	2-7/8	8-1/2	9-1/2	7/8	1-7/16	1	6-3/4	3-15/16	3-1/2
		69.1	*298.5*	*73.0*	*215.9*	*241.3*	*22*	*36.5*	*25.4*	*171.5*	*100.0*	*88.9*

All Dimensions Are In Millimeters Unless Otherwise Specified

The LT and LTB Pillow Blocks Are Identical Except the LTB Pillow Blocks Have Lower Backing Dimensions

FEATURES/BENEFITS PAGE B17-2	SPECIFICATION/HOW TO ORDER PAGE B17-4	NOMENCLATURE PAGE B17-5	SELECTION PAGE B17-6

SELECTION/DIMENSIONS

Sleeve Bearings - SOLIDLUBE

3/4" THRU 3" SOLIDLUBE LTB PILLOW BLOCKS

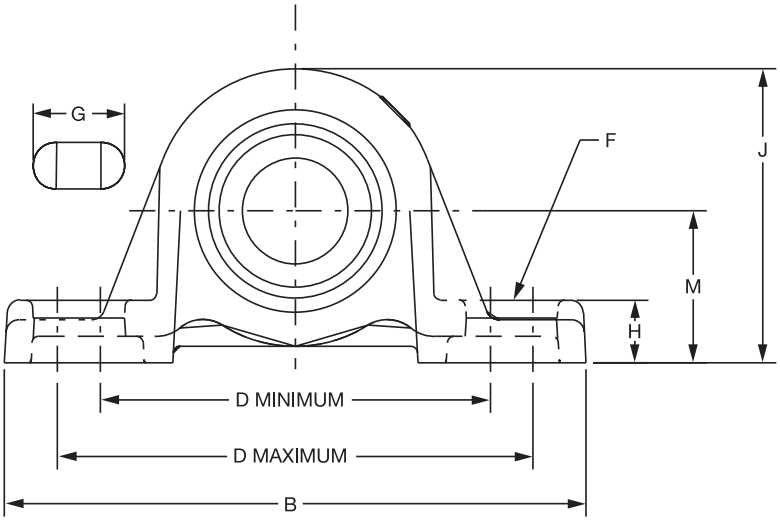

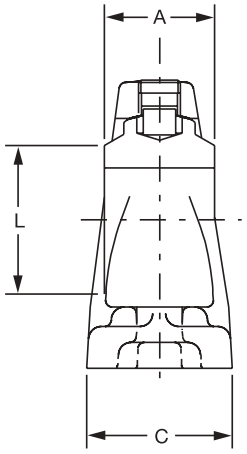

Series	Shaft Size	700 SERIES			1000 SERIES			Used on Frame
		Part No.	Description	Wt.	Part No.	Description	Wt.	
204	3/4	**032940**	P2B-LTB7-012	1.6	**032970**	P2B-LTB10-012	1.6	LD-10
	20mm	***034244***	*P2B-LTB7-20M*	*0.73*	***034252***	*P2B-LTB10-20M*	*0.73*	*LD-10*
205	7/8	**032941**	P2B-LTB7-014	1.5	**032971**	P2B-LTB10-014	1.5	LD-10
	15/16	**032942**	P2B-LTB7-015	1.4	**032972**	P2B-LTB10-015	1.4	
	1	**032943**	P2B-LTB7-100	1.3	**032973**	P2B-LTB10-100	1.3	
	25mm	***034245***	*P2B-LTB7-25M*	*0.59*	***034253***	*P2B-LTB10-25M*	*0.59*	*LD-10*
206	1-1/8	**032945**	P2B-LTB7-102	2.7	**032975**	P2B-LTB10-102	2.7	LD-20
	1-3/16	**032946**	P2B-LTB7-103	2.6	**032976**	P2B-LTB10-103	2.6	
	30mm	***034246***	*P2B-LTB7-30M*	*1.18*	***034254***	*P2B-LTB10-30M*	*1.18*	*LD-20*
207	1-1/4	**032947**	P2B-LTB7-104	4	**032977**	P2B-LTB10-104	4	LD-20
	1-3/8	**032949**	P2B-LTB7-106	3.8	**032979**	P2B-LTB10-106	3.8	
	1-7/16	**032950**	P2B-LTB7-107	3.7	**032980**	P2B-LTB10-107	3.7	
	1-1/2	**032951**	P2B-LTB7-108	3.6	**032981**	P2B-LTB10-108	3.6	
	35mm	***034247***	*P2B-LTB7-35M*	*1.72*	***034255***	*P2B-LTB10-35M*	*1.72*	*LD-20*
209	1-11/16	**032953**	P2B-LTB7-111	5	**032983**	P2B-LTB10-111	5	LD-20
	1-3/4	**032954**	P2B-LTB7-112	4.8	**032984**	P2B-LTB10-112	4.8	
	40mm	**034248**	P2B-LTB7-40M	2.27	**034256**	P2B-LTB10-40M	2.27	LD-20
	45mm	***034249***	*P2B-LTB7-45M*	*2.18*	***034257***	*P2B-LTB10-45M*	*2.18*	
210	1-15/16	**032955**	P2B-LT87-115	6	**032985**	P2B-LTB10-115	6	LD-30
	2	**032956**	P2B-LTB7-200	5.8	**032986**	P2B-LTB10-200	5.8	
	50mm	***034250***	*P2B-LTB7-50M*	*2.72*	***034258***	*P2B-LTB10-50M*	*2.72*	*LD-30*
211	2-3/16	**032957**	P2B-LTB7-203	6.5	**032987**	P2B-LTB10-203	6.5	LD-40
212	2-7/16	**032959**	P2B-LTB7-207	8.1	**032989**	P2B-LTB10-207	8.1	LD-40
	2-1/2	**032960**	P2B-LTB7-208	7.8	**032990**	P2B-LTB10-208	7.8	
	60mm	***034251***	*P2B-LTB7-60M*	*3.67*	***034259***	*P2B-LTB10-60M*	*3.67*	*LD-40*
215	2-15/16	**034596**	P2B-LTB7-215	18.7	**034598**	P2B-LTB10-215	18.7	LD-45
	3	**034597**	P2B-LTB7-300	18.4	**034599**	P2B-LTB10-300	18.4	
	70mm	....	....	....	....	....	....	*LD-45*
	75mm	....	....	....	....	....	....	

FEATURES/BENEFITS PAGE B17-2 | SPECIFICATION/HOW TO ORDER PAGE B17-4 | NOMENCLATURE PAGE B17-5 | SELECTION PAGE B17-6



Sleeve Bearings - SOLIDLUBE

3/4" THRU 3" SOLIDLUBE LTB PILLOW BLOCKS

Series Size	Shaft	A	B	C	D		F	G	H	J	L	M
					Min.	Max.	Bolt Dia.					
204	3/4	1	5-1/4	1-11/32	3-3/8	4-3/16	3/8	27/32	15/32	2-1/2	1-3/8	1-1/4
	20mm	*25.4*	*133.4*	*34.1*	*85.7*	*106.4*	*10*	*21.4*	*11.9*	*63.5*	*34.9*	*31.8*
205	7/8 15/16 1	1-1/16	5-1/2	1-13/32	3-11/16	4-1/2	3/8	27/32	15/32	2-21/32	1-9/16	1-5/16
	25mm	*27.0*	*139.7*	*35.7*	*93.7*	*114.3*	*10*	*21.4*	*11.9*	*67.5*	*39.7*	*33.3*
206	1-1/8 1-3/16	1-3/16	6-1/4	1-3/4	4-1/4	5	1/2	15/16	5/8	3-3/16	1-13/16	1-9/16
	30mm	*30.2*	*158.8*	*44.5*	*108.0*	*127.0*	*12*	*23.8*	*15.9*	*81.0*	*46.0*	*39.7*
207	1-1/4 1-3/8 1-7/16 1-1/2	1-5/16	6-1/2	1-3/4	4-11/16	5-7/16	1/2	15/16	21/32	3-11/16	2-1/8	1-13/16
	35mm	*33.3*	*165.1*	*44.5*	*119.1*	*138.1*	*12*	*23.8*	*16.7*	*93.7*	*54.0*	*46.0*
209	1-11/16 1-3/4 *40mm* *45mm*	1-9/16 *39.7*	7-7/16 *188.9*	2 *50.8*	5-1/2 *139.7*	6-3/16 *157.2*	1/2 *12*	29/32 *23.0*	11/16 *17.5*	4-7/32 *107.2*	2-9/16 *65.1*	2-1/16 *52.4*
210	1-15/16 2	1-5/8	8-1/8	2-1/4	6	6-11/16	5/8	1-1/32	11/16	4-15/32	2-13/16	2-3/16
	50mm	*41.3*	*206.4*	*57.1*	*152.4*	*170.0*	*16*	*26.2*	*17.5*	*113.5*	*71.4*	*55.6*
211	2-3/16	1-3/4	8-7/8	2-5/16	6-3/8	7-7/16	5/8	1-7/32	13/16	4-29/32	3-1/8	2-7/16
212	2-7/16 2-1/2	1-13/16	9-1/2	2-3/8	6-7/8	7-15/16	5/8	1-7/32	13/16	5-11/32	3-1/2	2-11/16
	60mm	*46.0*	*241.3*	*60.3*	*174.6*	*201.6*	*16*	*31.0*	*20.6*	*135.7*	*88.9*	*68.3*
215	2-15/16 3 *70mm* *75mm*	2-23/32 *69.1*	11-3/4 *298.5*	2-7/8 *73.0*	8-1/2 *215.9*	9-1/2 *241.3*	7/8 *22*	1-7/16 *36.5*	1-1/16	6-9/16	3-15/16 *100.0*	3-5/16 . . . .

All Dimensions Are In Millimeters Unless Otherwise Specified

The LT and LTB Pillow Blocks are Identical Except the LTB Pillow Blocks Have Lower backing Dimensions.

FEATURES/BENEFITS PAGE B17-2	SPECIFICATION/HOW TO ORDER PAGE B17-4	NOMENCLATURE PAGE B17-5	SELECTION PAGE B17-6

SELECTION/DIMENSIONS

Sleeve Bearings - SOLIDLUBE

3-7/16" THRU 5" SOLIDLUBE MM PILLOW BLOCKS

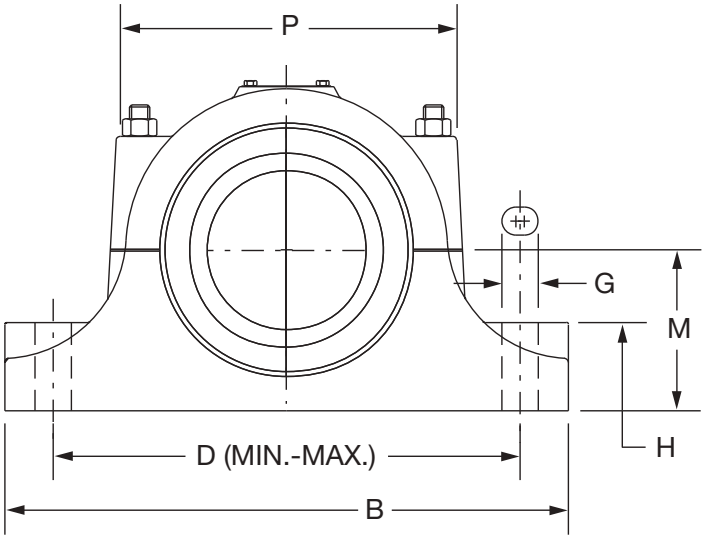

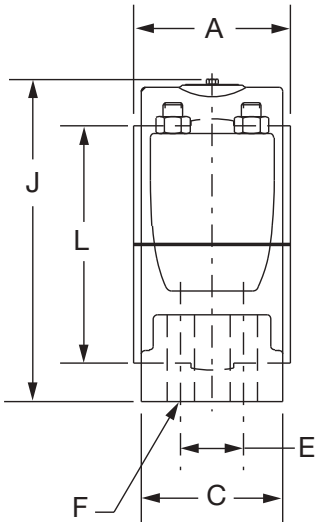

Shaft Size	700 Series		1000 Series		Wt.	Used On Frame	A	B	C
	Part No.	Description	Part No.	Description					
3-7/16	**033247**	P2B-MM7-307	**033347**	P2B-MM10-307	23.00	HD-250	3-1/2	12	2-13/16
3-1/2	**033251**	P2B-MM7-308	**033351**	P2B-MM10-308	22.80				
3-15/16	**033475**	P2B-MM7-315	**033480**	P2B-MM10-315	36.00	HD-300	4	13-7/16	3-3/16
4	**033485**	P2B-MM7-400	**033490**	P2B-MM10-400	35.80				
4-7/16	**033500**	P2B-MM7-407	**033505**	P2B-MM10-407	60.00	HD-350	4-1/2	16	3-7/16
4-1/2	**033510**	P2B-MM7-408	**033515**	P2B-MM10-408	59.70				
4-15/16	**033525**	P4B-MM7-415	**033530**	P4B-MM10-415	92.00	HD-400	5	17-7/16	4-3/4
5	**033535**	P4B-MM7-500	**033540**	P4B-MM10-500	91.50				

Shaft Size	D		2 Bolt Base	4 Bolt Base		G	H	J	L	M	P
	Min.	Max.	F Bolt Dia.	E	F Bolt Dia.						
3-7/16 3-1/2	9-1/4	10-1/4	5/8	...	...	1-1/4	1-3/4	7	4-7/8	3-1/4	7- 1/4
3-15/16 4	9-7/8	11-1/2	3/4	...	...	1-11/16	2	7-15/16	5-5/8	3-3/4	8-3/16
4-7/16 4-1/2	12-13/16	13-13/16	7/8	...	...	1-1/2	2-1/4	9-7/16	6-15/16	4-1/2	10
4-15/16 5	13-1/8	14-3/4	. . .	2	3/4	1-11/16	2-3/4	10-1/2	7-9/16	5	10-5/8

♦ No Published Metric Dimensions For This Product



Sleeve Bearings - SOLIDLUBE

3-7/16" THRU 5" SOLIDLUBE MM 4-BOLT FLANGE BEARINGS

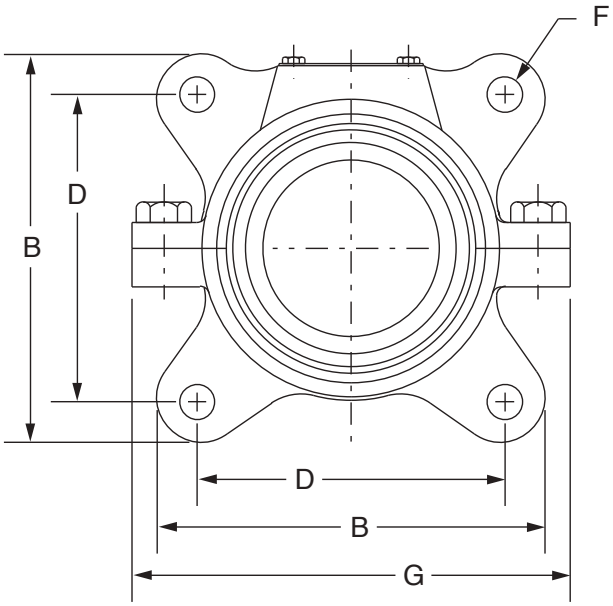

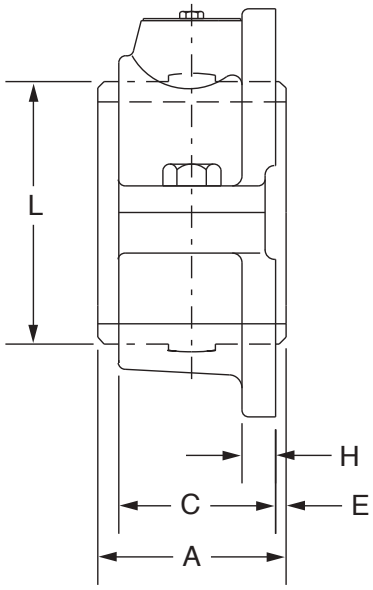

Shaft Size	700 Series		1000 Series		Wt.
	Part No.	Description	Part No.	Description	
3-7/16	**033323**	F4B-MM7-307	**033868**	F4B-MM10-307	17.00
3-1/2	**033321**	F4B-MM7-308	**033931**	F4B-MM10-308	18.00
3-15/16	**032923**	F4B-MM7-315	**033899**	F4B-MM10-315	26.00
4	**032937**	F4B-MM7-400	**033932**	F4B-MM10-400	
4-7/16	**033862**	F4B-MM7-407	**033933**	F4B-MM10-407	42.00
4-1/2	**033863**	F4B-MM7-408	**033934**	F4B-MM10-408	
4-15/16	**033929**	F4B-MM7-415	**033869**	F4B-MM10-415	62.00
5	**033930**	F4B-MM7-500	**033867**	F4B-MM10-500	

Shaft Size	A	B	C	D	E	F	G	H	L
3-7/16 3-1/2	3-1/2	7-5/8	2-59/64	6	3/16	5/8	8-9/16	5/8	4- 7/8
3-15/16 4	4	8-7/8	3-11/32	6-7/8	1/4	3/4	9-1/2	11/16	5- 5/8
4-7/16 4-1/2	4-1/2	10-1/4	3-23/32	8-1/8	1/4	7/8	11-3/8	3/4	6-15/16
4-15/16 5	5	11-7/16	4- 5/8	9-3/16	1/8	1	12-7/8	13/16	7- 9/16

♦ No Published Metric Dimensions For This Product

SELECTION/DIMENSIONS

Sleeve Bearings - SOLIDLUBE

3/4" THRU 2" SOLIDLUBE LT 2-BOLT FLANGE BEARING

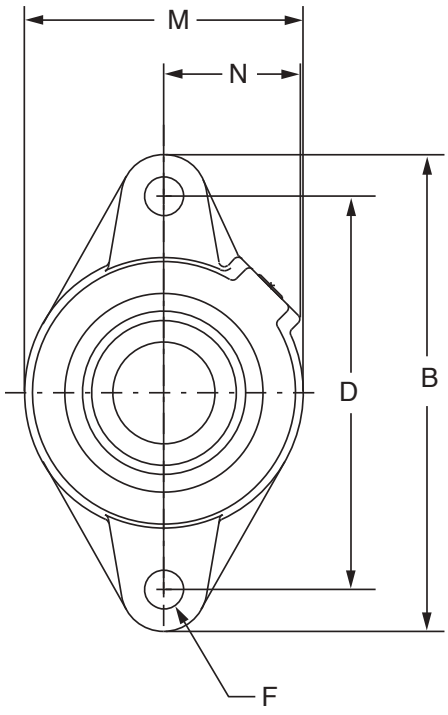

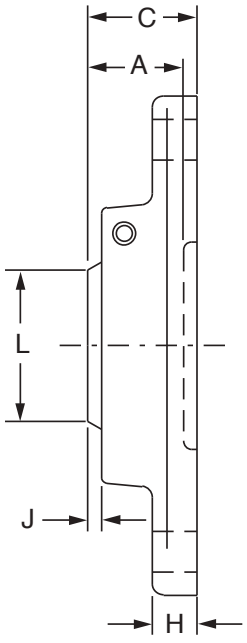

Series	Shaft Size	700 Series			1000 Series		
		Part No.	Description	Wt.	Part No.	Description	Wt.
204	3/4	**033085**	F2B-LT7-012	1.2	**033185**	F2B-LT10-012	1.2
	20mm	***034260***	*F2B-LT7-20M*	*0.54*	***034266***	*F2B-LT10-20M*	*0.54*
205	7/8	**033086**	F2B-LT7-014	1.7	**033186**	F2B-LT10-014	1.7
	15/16	**033087**	F2B-LT7-015	1.6	**033187**	F2B-LT10-015	1.6
	1	**033088**	F2B-LT7-100	1.5	**033188**	F2B-LT10-100	1.5
	25mm	***034261***	*F2B-LT7-25M*	*0.68*	***034267***	*F2B-LT10-25M*	*0.68*
206	1-1/8	**033089**	F2B-LT7-102	2.2	**033189**	F2B-LT10-102	2.2
	1-3/16	**033090**	F2B-LT7-103	2.1	**033190**	F2B-LT10-103	2.1
	30mm	***034262***	*F2B-LT7-30M*	*0.95*	***034268***	*F2B-LT10-30M*	*0.95*
207	1-1/4	**033091**	F2B-LT7-104	3.6	**033191**	F2B-LT10-104	3.6
	1-3/8	**033092**	F2B-LT7-106	3.3	**033192**	F2B-LT10-106	3.3
	1-7/16	**033093**	F2B-LT7-107	3.2	**033193**	F2B-LT10-107	3.2
	1-1/2	**033094**	F2B-LT7-108	3.1	**033194**	F2B-LTl0-108	3.1
	35mm	***034263***	*F2B-LT7-35M*	*1.5*	***034269***	*F2B-LT10-35M*	*1.5*
209	1-11/16	**033095**	F2B-LT7-111	4.9	**033195**	F2B-LT10-111	4.9
	1-3/4	**033096**	F2B-LT7-112	4.7	**033196**	F2B-LT10-112	4.7
	40mm	***034218***	*F2B-LT7-40M*	*2.22*	***034270***	*F2B-LT10-40M*	*2.22*
	45mm	***034264***	*F2B-LT7-45M*	*2.13*	***034271***	*F2B-LT10-45M*	*2.13*
210	1-15/16	**033097**	F2B-LT7-115	5.4	**033197**	F2B-LT10-115	5.4
	2	**033098**	F2B-LT7-200	5.2	**033198**	F2B-LT10-200	5.2
	50mm	***034265***	*F2B-LT7-50M*	*2.36*	***034272***	*F2B-LT10-50M*	*2.36*

FEATURES/BENEFITS PAGE B17-2	SPECIFICATION/HOW TO ORDER PAGE B17-4	NOMENCLATURE PAGE B17-5	SELECTION PAGE B17-6



Sleeve Bearings - SOLIDLUBE

3/4” THRU 2” SOLIDLUBE LT 2-BOLT FLANGE BEARING

Series	Shaft Size	A	B	C	D	F Bolt Dia.	H	J	L	M	N
204	3/4 *20mm*	29/32 *23.0*	4-13/16 *122.2*	1-1/8 *28.6*	3-17/32 *89.7*	3/8 *3/8*	1/2 *12.7*	5/32 *4.0*	1-3/8 *34.9*	2-3/8 *60.3*	1-1/2 *38.1*
205	7/8 15/16 1 *25mm*	63/64 *25.4*	4-7/8 *123.8*	1-1/8 *28.6*	3-57/64 *98.8*	7/16 *7/16*	1/2 *12.7*	5/32 *4.0*	1-9/16 *39.7*	2-3/4 *69.9*	1-7/16 *36.5*
206	1-1/8 1-3/16 *30mm*	1-7/64 *28.2*	5-9/16 *141.3*	1-7/32 *31.0*	4-19/32 *116.7*	7/16 *7/16*	1/2 *12.7*	5/32 *4.0*	1-13/16 *46.0*	3-1/8 *79.4*	1-9/16 *39.7*
207	1-1/4 1-3/8 1-7/16 1-1/2 *35mm*	1-7/32 *31.0*	6-1/8 *155.6*	1-3/8 *34.9*	5-1/8 *130.2*	1/2 *1/2*	9/16 *14.3*	5/32 *4.0*	2-1/8 *54.0*	3-3/4 *95.3*	1-27/32 *46.8*
209	1-11/16 1-3/4 *40mm* *45mm*	1-21/64 *33.7*	7-1/l6 *179.4*	1-19/32 *40.5*	5-27/32 *148.4*	1/2 *1/2*	5/8 *15.9*	3/16 *4.8*	2-9/16 *65.1*	4-3/8 *111.1*	1-29/32 *48.4*
210	1-15/16 2 *50mm*	1-13/32 *35.7*	7-7/16 *188.9*	1-21/32 *42.1*	6-3/16 *157.2*	1/2 *1/2*	5/8 *15.9*	3/16 *4.8*	2-13/16 *71.4*	4-9/32 *108.7*	2-1/32 *51.6*

FEATURES/BENEFITS PAGE B17-2	SPECIFICATION/HOW TO ORDER PAGE B17-4	NOMENCLATURE PAGE B17-5	SELECTION PAGE B17-6

SELECTION/DIMENSIONS

Sleeve Bearings - SOLIDLUBE

3/4" THRU 3" SOLIDLUBE LT 4-BOLT FLANGE BEARING

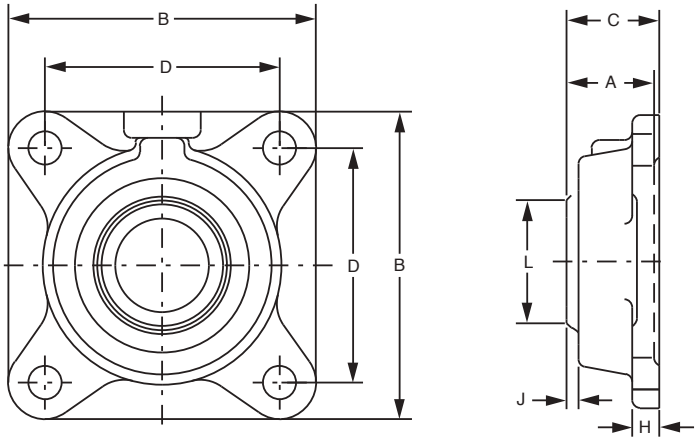

Series	Shaft Size	700 Series			1000 Series		
		Part No.	Description	Wt.	Part No.	Description	Wt.
204	3/4	**033260**	F4B-LT7-012	1.5	**033200**	F4B-LT10-012	1.5
	20mm	***034273***	*F4B-LT7-20M*	*0.68*	***034283***	*F4B-LT10-20M*	*0.6*
205	7/8	**033261**	F4B-LT7-014	2.2	**033201**	F4B-LT10-014	2.2
	15/16	**033262**	F4B-LT7-015	2.1	**033202**	F4B-LT10-015	2.1
	1	**033263**	F4B-LT7-100	2	**033203**	F4B-LT10-100	2
	25mm	***034274***	*F4B-LT7-25M*	*0.91*	***034284***	*F4B-LT10-25M*	*0.91*
206	1-1/8	**033264**	F4B-LT7-102	2.9	**033204**	F4B-LT10-102	2.9
	1-3/16	**033265**	F4B-LT7-103	2.8	**033205**	F4B-LT10-103	2.8
	30mm	***034275***	*F4B-LT7-30M*	*1.27*	***034285***	*F4B-LT10-30M*	*1.27*
207	1-1/4	**033266**	F4B-LT7-104	4.3	**033206**	F4B-LT10-104	4.3
	1-3/8	**033267**	F4B-LT7-106	4	**033207**	F4B-LT10-106	4
	1-7/16	**033268**	F4B-LT7-107	3.9	**033208**	F4B-LT10-107	3.9
	1-1/2	**033269**	F4B-LT7-108	3.8	**033209**	F4B-LT10-108	3.8
	35mm	***034276***	*F4B-LT7-35M*	*1.81*	***034286***	*F4B-LT10-35M*	*1.81*
209	1-11/16	**033270**	F4B-LT7-111	5.8	**033210**	F4B-LT10-111	5.8
	1-3/4	**033271**	F4B-LT7-112	5.6	**033211**	F4B-LT10-112	5.6
	40mm	***034277***	*F4B-LT7-40M*	*2.63*	***034287***	*F4B-LT10-40M*	*2.63*
	45mm	***034278***	*F4B-LT7-45M*	*2.54*	***034288***	*F4B-LT10-45M*	*2.54*
210	1-15/16	**033272**	F4B-LT7-115	6.8	**033212**	F4B-LT10-115	6.8
	2	**033273**	F4B-LT7-200	6.6	**033213**	F4B-LT10-200	6.6
	50mm	***034279***	*F4B-LT7-50M*	*3*	***034289***	*F4B-LT10-50M*	*3*
211	2-3/16	**033274**	F4B-LT7-203	8.5	**033214**	F4B-LT10-203	8.5
212	2-7/16	**033275**	F4B-LT7-207	11	**033215**	F4B-LT10-207	11
	2-1/2	**033276**	F4B-LT7-208	10.8	**033216**	F4B-LT10-208	10.8
	60mm	***034280***	*F4B-LT7-60M*	*5*	***034290***	*F4B-LT10-60M*	*5*
215	2-15/16	**033277**	F4B-LT7-215	18	**033217**	F4B-LT10-215	18
	3	**033278**	F4B-LT7-300	17.7	**033218**	F4B-LT10-300	17.7
	70mm	***034281***	*F4B-LT7-70M*	*8.16*	***034291***	*F4B-LT10-70M*	*8.16*
	75mm	***034282***	*F4B-LT7-75M*	*8.03*	***034292***	*F4B-LT10-75M*	*8.03*



Sleeve Bearings - SOLIDLUBE

3/4" THRU 3" SOLIDLUBE LT 4-BOLT FLANGE BEARING

Series	Shaft Size	A	B	C	D	F Bolt	H	J	L
204	3/4 *20mm*	29/32 *23.0*	3-3/8 *85.7*	1-1/8 *28.6*	2-1/2 *63.5*	3/8 *10.0*	7/16 *11.1*	5/32 *3.2*	1-3/8 *34.9*
205	7/8 15/16 1 *25mm*	63/64 *25.4*	3-3/4 *95.2*	1-1/8 *28.6*	2-3/4 *69.9*	7/16 *10.0*	1/2 *12.7*	3/16 *4.8*	1-9/16 *39.7*
206	1-1/8 1-3/16 *30mm*	31/32 *28.2*	4-1/4 *108.0*	1-7/32 *31.0*	3-1/4 *82.6*	7/16 *10.0*	1/2 *12.7*	5/32 *4.0*	1-13/16 *46.0*
207	1-1/4 1-3/8 1-7/16 1-1/2 *35mm*	1-7/32 *31.0*	4-3/4 *120.7*	1-3/8 *34.9*	3-5/8 *92.1*	1/2 *12.0*	9/16 *14.3*	5/32 *4.0*	2-1/8 *54.0*
209	1-11/16 1-3/4 *40mm* *45mm*	1-11/32 *33.7*	5-3/8 *136.5*	1-19/32 *40.5*	4-1/8 *104.8*	1/2 *12.0*	5/8 *15.9*	13/64 *4.8*	2-9/16 *65.1*
210	1-15/16 2 *50mm*	1-13/32 *35.7*	5-5/8 *142.9*	1-21/32 *42.1*	4-3/8 *111.1*	1/2 *12.0*	5/8 *15.9*	7/32 *4.8*	2-13/16 *71.4*
211	2-3/16	1-17/32	6-1/2	1-25/32	5-1/8	5/8	11/16	7/32	3-1/8
212	2-7/16 2-1/2 *60mm*	1-15/32 *41.3*	7 *177.8*	1-31/32 *47.6*	5-5/8 *142.9*	5/8 *16.0*	11/16 *17.5*	11/64 *4.0*	3-1/2 *88.9*
215	2-15/16 3 *70mm* *75mm*	2-23/32 *61.1*	7-3/4 *196.9*	2-3/4 *70.6*	6 *152.4*	3/4 *18.0*	1 *25.4*	17/32 *13.5*	3-15/16 *100.0*

All Dimensions Are in Millimeters Unless Otherwise Specified.

FEATURES/BENEFITS PAGE B17-2	SPECIFICATION/HOW TO ORDER PAGE B17-4	NOMENCLATURE PAGE B17-5	SELECTION PAGE B17-6

SELECTION/DIMENSIONS

Sleeve Bearings - SOLIDLUBE

3/4" THRU 2-1/2" SOLIDLUBE LT NARROW SLOT TAKE-UP BEARINGS

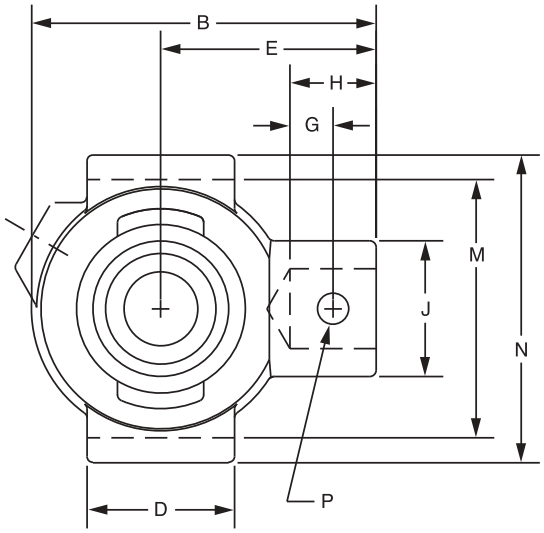

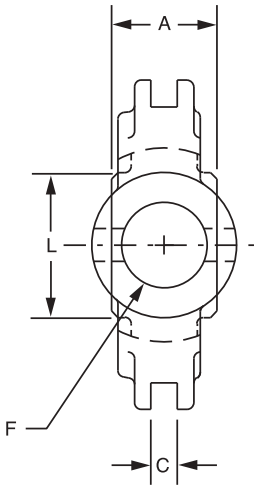

Series	Shaft Size	LT700			LT1000			Used On Frame
		Part No.	Description	Wt.	Part No.	Description	Wt.	
204	3/4	**033810**	NSTU-LT7-012	1.7	**033840**	NSTU-LT10-012	1.7	NS-210
	20mm	***034293***	*NSTU-LT7-20M*	*0.77*	***034303***	*NSTU-LT10-20M*	*0.77*	*NS-210*
205	7/8	**033811**	NSTU-LT7-014	1.9	**033841**	NSTU-LT10-014	1.9	NS-210
	15/16	**033812**	NSTU-LT7-015	1.8	**033842**	NSTU-LT10-015	1.8	
	1	**033813**	NSTU-LT7-100	1.7	**033843**	NSTU-LT10-100	1.7	
	25mm	***034294***	*NSTU-LT7-25M*	*0.77*	***034304***	*NSTU-LT10-25M*	*0.77*	*NS-210*
206	1-1/8	**033814**	NSTU-LT7-102	2.8	**033844**	NSTU-LT10-102	2.8	NS-308
	1-3/16	**033815**	NSTU-LT7-103	2.7	**033845**	NSTU-LT10-103	2.7	
	30mm	***034295***	*NSTU-LT7-30M*	*1.22*	***034305***	*NSTU-LT10-30M*	*1.22*	*NS-308*
207	1-1/4	**033816**	NSTU-LT7-104	3.2	**033846**	NSTU-LT10-104	3.2	NS-308
	1-3/8	**033817**	NSTU-LT7-106	3.0	**033847**	NSTU-LT10-106	3.0	
	1-7/16	**033818**	NSTU-LT7-107	2.9	**033848**	NSTU-LT10-107	2.9	
	1-1/2	**033819**	NSTU-LT7-108	2.8	**033849**	NSTU-LT10-108	2.8	
	35mm	***034296***	*NSTU-LT7-35M*	*1.36*	***034306***	*NSTU-LT10-35M*	*1.36*	*NS-308*
209	1-11/16	**033820**	NSTU-LT7-111	4.9	**033850**	NSTU-LT10-111	4.9	NS-400
	1- 3/4	**033821**	NSTU-LT7-112	4.8	**033851**	NSTU-LT10-112	4.8	
	40mm	***034297***	*NSTU-LT7-40M*	*2.22*	***034307***	*NSTU-LT10-40M*	*2.22*	*NS-400*
	45mm	***034298***	*NSTU-LT7-45M*	*2.18*	***034308***	*NSTU-LT10-45M*	*2.18*	
210	1-15/16	**033822**	NSTU-LT7-115	5.5	**033852**	NSTU-LT10-115	5.5	NS-400
	2	**033823**	NSTU-LT7-200	5.3	**033853**	NSTU-LT10-200	5.3	
	50mm	***034299***	*NSTU-LT7-50M*	*2.4*	***034309***	*NSTU-LT10-50M*	*2.4*	*NS-400*
211	2-3/16	**033824**	NSTU-LT7-203	6.7	**033854**	NSTU-LT10-203	6.7	NS-407
212	2-7/16	**033825**	NSTU-LT7-207	7.4	**033855**	NSTU-LT10-207	7.4	NS-415
	2-1/2	**033826**	NSTU-LT7-208	7.0	**033856**	NSTU-LT10-208	7.0	
	60mm	***034300***	*NSTU-LT7-60M*	*3.18*	***034310***	*NSTU-LT10-60M*	*3.18*	*NS-415*



Sleeve Bearings - SOLIDLUBE

3/4" THRU 2-1/2" SOLIDLUBE LT NARROW SLOT TAKE-UP BEARINGS

Series	Shaft Size	A	B	C	D	E	F Screw Dia.	G
204	3/4 *20mm*	1 *25.4*	3-1/2 *88.9*	1/4 *6.4*	1-1/2 *38.1*	2-3/16 *55.6*	3/4 *3/4*	7/16 *11.1*
205	7/8, 15/16, 1 *25mm*	1-1/16 *27*	3-9/16 *90.5*	1/4 *6.4*	1-1/2 *38.1*	2-3/16 *55.6*	3/4 *3/4*	7/16 *11.1*
206	1-1/8 1-3/16 *30mm*	1-3/16 *30.2*	4-5/16 *109.5*	1/4 *6.4*	2-1/2 *63.5*	2-11/16 *68.3*	3/4 *3/4*	7/16 *11.1*
207	1-1/4, 1-3/8, 1-7/16, 1-1/2 *35mm*	1-5/16 *33.3*	4-1/2 *114.3*	1/4 *6.4*	2-1/2 *63.5*	2-11/16 *68.3*	3/4 *3/4*	7/16 *11.1*
209	1-11/16, 1-3/4 *40mm* *45mm*	1- 9/16 *39.7*	5- 7/16 *138.1*	5/16 *7.9*	3 *76.2*	3-1/4 *82.6*	7/8 *7/8*	1/2 *12.7*
210	1-15/16, 2 *50mm*	1- 5/8 *41.3*	5- 1/2 *139.7*	5/16 *7.9*	3 *76.2*	3-1/4 *82.6*	7/8 *7/8*	1/2 *12.7*
211	2-3/16	1- 3/4	6- 1/8	5/16	3-1/2	3-5/8	1	19/32
212	2-7/16, 2-1/2 *60mm*	1-13/16 *46*	6-11/16 *169.9*	5/16 *7.9*	3-3/4 *95.3*	3-7/8 *95.3*	1 *1*	19/32 *15.1*

Series	Shaft Size	H	J	L	M	N	P Pin Dia.
204	3/4 *20mm*	7/8 *22.2*	1-3/8 *34.9*	1-3/8 *34.9*	2-5/8 *66.7*	3-1/8 *79.4*	5/16 *5/16*
205	7/8, 15/16, 1 *25mm*	7/8 *22.2*	1-3/8 *34.9*	1-9/16 *39.7*	2-5/8 *66.7*	3-1/8 *79.4*	5/16 *5/16*
206	1-1/8 1-3/16 *30mm*	15/16 *23.8*	1-3/8 *34.9*	1-13/16 *46.0*	3-1/2 *88.9*	4-1/8 *104.8*	5/16 *5/16*
207	1-1/4, 1-3/8, 1-7/16, 1-1/2 *35mm*	15/16 *23.8*	1-3/8 *34.9*	2-1/8 *54.0*	3-1/2 *88.9*	4-1/8 *104.8*	5/16 *5/16*
209	1-11/16, 1-3/4 *40mm* *45mm*	1-7/32 *31.0*	1-5/8 *41.3*	2-9/16 *65.1*	4 *101.6*	4-3/4 *120.7*	3/8 *3/8*
210	1-15/16, 2 *50mm*	1-3/32 *27.8*	1-5/8 *41.3*	2-13/16 *71.4*	4 *101.6*	4-3/4 *120.7*	3/8 *3/8*
211	2-3/16	1-9/32	1-5/8	3- 1/2	4-15/16	5-3/4	7/16
212	2-7/16, 2-1/2 *60mm*	1-9/32 *32.5*	1-3/4 *41.3*	3-1/8 *88.9*	4-7/16 *125.4*	5-3/8 *146.1*	7/16 *7/16*

FEATURES/BENEFITS PAGE B17-2	SPECIFICATION/HOW TO ORDER PAGE B17-4	NOMENCLATURE PAGE B17-5	SELECTION PAGE B17-6

SELECTION/DIMENSIONS

Sleeve Bearings - SOLIDLUBE

3/4" THRU 3" SOLIDLUBE LT WIDE SLOT TAKE-UP BEARINGS

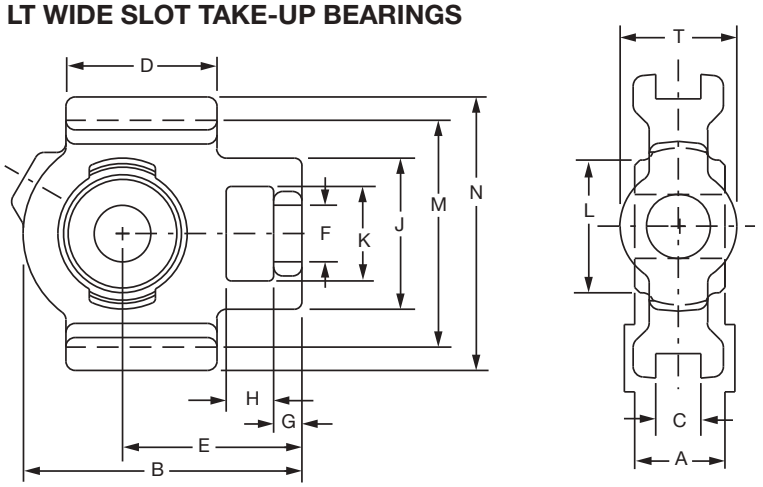

Series	Shaft Size	LT700			LT1000			Used on Frame
		Part No.	Description	Wt.	Part No.	Description	Wt.	
204	3/4	**033870**	WSTU-LT7-012	2.4	**033910**	WSTU-LT10-012	2.4	WS-300
	20mm	***034313***	*WSTU-LT7-20M*	*1.09*	***034323***	*WSTU-LT10-20M*	*1.09*	*WS-300*
205	7/8	**033871**	WSTU-LT7-014	2.6	**033911**	WSTU-LT10-014	2.6	WS-300
	15/16	**033872**	WSTU-LT7-015	2.5	**033912**	WSTU-LT10-015	2.5	
	1	**033873**	WSTU-LT7-100	2.4	**033913**	WSTU-LT10-100	2.4	
	25mm	***034314***	*WSTU-LT7-25M*	*1.09*	***034324***	*WSTU-LT10-25M*	*1.09*	*WS-300*
206	1-1/8	**033874**	WSTU-LT7-102	3.2	**033914**	WSTU-LT10-102	3.2	WS-308
	1-3/16	**033875**	WSTU-LT7-103	3.1	**033915**	WSTU-LT10-103	3.1	
	30mm	***034315***	*WSTU-LT7-30M*	*1.41*	***034325***	*WSTU-LT10-30M*	*1.41*	*WS-308*
207	1-1/4	**033876**	WSTU-LT7-104	4.2	**033916**	WSTU-LT10-104	4.2	WS-308
	1-3/8	**033877**	WSTU-LT7-106	3.9	**033917**	WSTU-LT10-106	3.9	
	1-7/16	**033878**	WSTU-LT7-107	3.8	**033918**	WSTU-LT10-107	3.8	
	1-1/2	**033879**	WSTU-LT7-108	3.7	**033919**	WSTU-LT10-108	3.7	
	35mm	***034316***	*WSTU-LT7-35M*	*1.77*	***034326***	*WSTU-LT10-35M*	*1.77*	*WS-308*
209	1-11/16	**033880**	WSTU-LT7-111	6.1	**033920**	WSTU-LT10-111	6.1	WS-400
	1- 3/4	**033881**	WSTU-LT7-112	6	**033921**	WSTU-LT10-112	6	
	40mm	***034317***	*WSTU-LT7-40M*	*2.77*	***034327***	*WSTU-LT10-40M*	*2.77*	*WS-400*
	45mm	***034318***	*WSTU-LT7-45M*	*2.72*	***034328***	*WSTU-LT10-45M*	*2.72*	
210	1-15/16	**033882**	WSTU-LT7-115	6.7	**033922**	WSTU-LT10-115	6.7	WS-400
	2	**033883**	WSTU-LT7-200	6.5	**033923**	WSTU-LT10-200	6.5	
	50mm	***034319***	*WSTU-LT7-50M*	*2.95*	***034329***	*WSTU-LT10-50M*	*2.95*	*WS-400*
211	2-3/16	**033884**	WSTU-LT7-203	9.8	**033924**	WSTU-LT10-203	9.8	WS-502
212	2-7/16	**033885**	WSTU-LT7-207	10.1	**033925**	WSTU-LT10-207	10.1	WS-502
	2-1/2	**033886**	WSTU-LT7-208	9.8	**033926**	WSTU-LT10-208	9.8	
	60mm	***034320***	*WSTU-LT7-60M*	*4.58*	***034330***	*WSTU-LT10-60M*	*4.58*	*WS-502*
215	2-15/16	**033887**	WSTU-LT7-215	13	**033927**	WSTU-LT10-215	13	WS-515
	3	**033888**	WSTU-LT7-300	12.5	**033928**	WSTU-LT10-300	12.5	
	70mm	***034321***	*WSTU-LT7-70M*	*5.9*	***034331***	*WSTU-LT10-70M*	*5.9*	*WS-515*
	75mm	***034322***	*WSTU-LT7-75M*	*5.67*	***034332***	*WSTU-LT10-75M*	*5.67*	

FEATURES/BENEFITS PAGE B17-2 | SPECIFICATION/HOW TO ORDER PAGE B17-4 | NOMENCLATURE PAGE B17-5 | SELECTION PAGE B17-6



Sleeve Bearings - SOLIDLUBE

3/4" THRU 3 SOLIDLUBE LT WIDE SLOT TAKE-UP BEARINGS

Series	Shaft Size	A	B	C	D	E	F Dia.	G
204	3/4 *20mm*	1 *25.4*	3-11/16 *93.7*	17/32 *13.5*	2 *50.8*	2-3/8 *60.3*	3/4 *3/4*	3/8 *9.5*
205	7/8, 15/16, 1 *25mm*	1-1/16 *27.0*	3-13/16 *96.8*	17/32 *13.5*	2 *50.8*	2-7/16 *61.9*	13/16 *13/16*	3/8 *9.5*
206	1-1/8, 1-3/16 *30mm*	1- 3/16 *30.2*	4- 3/8 *111.1*	17/32 *13.5*	2-1/4 *57.2*	2-3/4 *69.9*	7/8 *7/8*	3/8 *9.5*
207	1-1/4, 1-3/8 1-7/16, 1-1/2 *35mm*	1- 5/16 *33.3*	4- 7/8 *123.8*	17/32 *13.5*	2-1/2 *63.5*	3-1/16 *77.8*	7/8 *7/8*	1/2 *23.7*
209	1-11/16,1-3/4 *40mm, 45mm*	1- 9/16 *39.7*	5- 5/8 *142.9*	11/16 *17.5*	3-1/4 *82.6*	3-7/16 *87.3*	1-1/8 *1-1/8*	5/8 *15.9*
210	1-15/16, 2 *50mm*	1-5/8 *41.3*	5-13/16 *147.6*	11/16 *17.5*	3-3/8 *85.7*	3-9/16 *90.5*	1-1/8 *1-1/8*	5/8 *15.9*
211	2-3/16	1-3/4	6-11/16	1-1/16	3-3/4	4-3/16	1-3/8	3/4
212	2-7/16, 2-1/2 *60mm*	1-13/16 *46.0*	7-1/2 *190.5*	1-1/16 *27.0*	4 *101.6*	4-11/16 *119.1*	1-3/8 *1-3/8*	3/4 *19.1*
215	2-15/16, 3 *70mm, 75mm*	2-23/32 *69.1*	9-1/8 *231.8*	1-1/16 *27.0*	4-3/4 *120.7*	5-1/2 *139.7*	1-9/16 *1-9/16*	13/16 *20.6*

Series	Shaft Size	H	J	K	L	M	N	T
204	3/4 *20mm*	5/8 *15.9*	2 *50.8*	1-1/4 *31.8*	1-3/8 *34.9*	3 *76.2*	3-5/8 *92.1*	1-3/8 *34.9*
205	7/8, 15/16, 1 *25mm*	5/8 *15.9*	2 *50.8*	1-5/16 *33.3*	1-9/16 *39.7*	3 *76.2*	3-5/8 *92.1*	1-3/8 *34.9*
206	1-1/8, 1-3/16 *30mm*	5/8 *15.9*	2-3/16 *55.6*	1-7/16 *36.5*	1-13/16 *46.0*	3-1/2 *88.9*	4-1/8 *104.8*	1-5/8 *41.3*
207	1-1/4, 1-3/8 1-7/16, 1-1/2 *35mm*	5/8 *15.9*	2-1/2 *63.5*	1-7/16 *36.5*	2-1/8 *54.0*	3-1/2 *88.9*	4-1/8 *104.8*	1-5/8 *41.3*
209	1-11/16,1-3/4 *40mm, 45mm*	3/4 *19.1*	3-1/4 *82.6*	1-15/16 *49.2*	2-9/16 *65.1*	4 *101.6*	4-3/4 *120.7*	1-15/16 *49.2*
210	1-15/16, 2 *50mm*	3/4 *19.1*	3-1/4 *82.6*	1-15/16 *49.2*	2-13/16 *71.4*	4 *101.6*	4-3/4 *120.7*	1-15/16 *49.2*
211	2-3/16	1	4	2-1/2	3-1/8	5-1/8	5-7/8	2-1/2
212	2-7/16, 2-1/2 *60mm*	1-1/4 *31.8*	4 *101.6*	2-1/2 *63.5*	3-1/2 *88.9*	5-1/8 *130.2*	5-7/8 *149.2*	2-1/2 *63.5*
215	2-15/16, 3 *70mm, 75mm*	1-1/4 *31.8*	4-3/8 *111.1*	2-3/4 *69.9*	3-15/16 *100.0*	5-15/16 *150.8*	6-11/16 *169.9*	2-3/4 *69.9*

FEATURES/BENEFITS PAGE B17-2	SPECIFICATION/HOW TO ORDER PAGE B17-4	NOMENCLATURE PAGE B17-5	SELECTION PAGE B17-6

SELECTION/DIMENSIONS

Sleeve Bearings - SOLIDLUBE

1-15/16" THRU 3" TYPE GLT SOLIDLUBE TAKE-UP BEARINGS

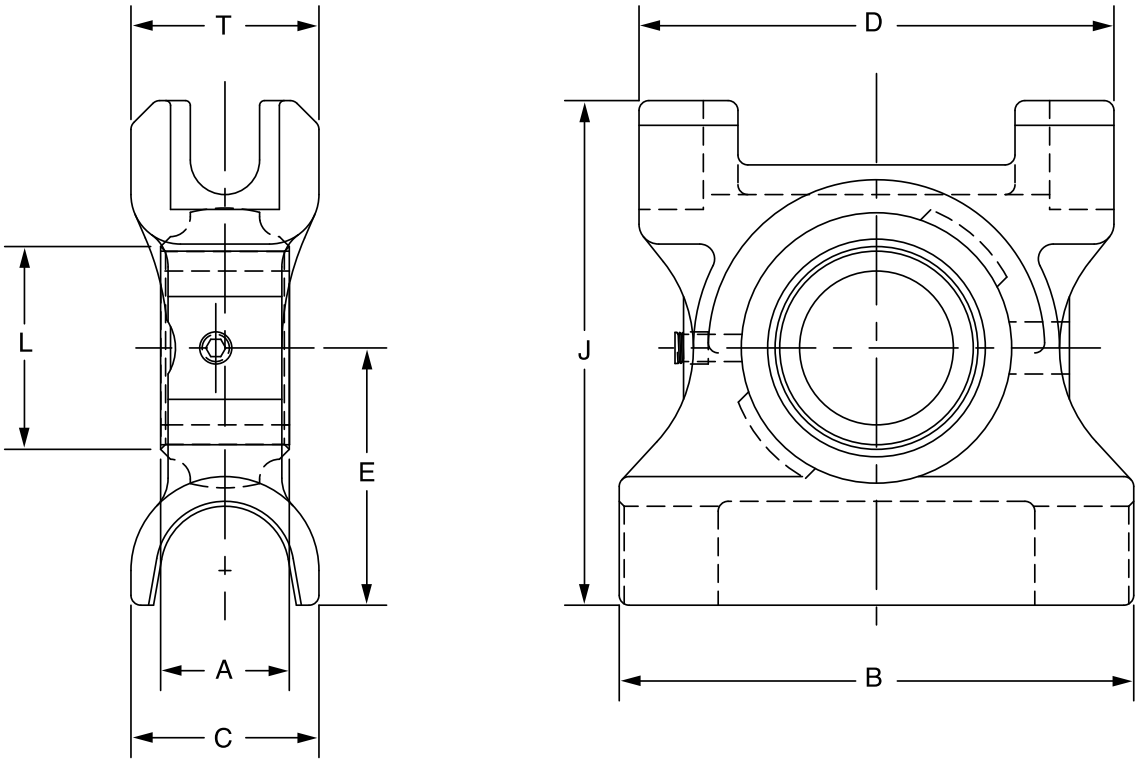

Shaft Size	700 Series		1000 Series		Wt.	Frame Size
	Part No.	Description	Part No.	Description		
1-15/16	**033739**	TP-GLT7-115	**033750**	TP-GLT10-115	10.1	TP10
2	**033740**	TP-GLT7-200	**033751**	TP-GLT10-200		
2-3/16	**033741**	TP-GLT7-203	**033752**	TP-GLT10-203	11.8	TP20
2-7/16	**033742**	TP-GLT7-207	**033753**	TP-GLT10-207	14.1	TP30
2-1/2	**033743**	TP-GLT7-208	**033754**	TP-GLT10-208		
2-15/16	**033744**	TP-GLT7-215	**033755**	TP-GLT10-215	17.0	TP40
3	**033745**	TP-GLT7-300	**033756**	TP-GLT10-300		



Sleeve Bearings - SOLIDLUBE

1-15/16” THRU 3” TYPE GLT SOLIDLUBE TAKE-UP BEARINGS

Shaft Size	A	B	C	D	E	J	L	T
1-15/16 2	1-5/8	6-1/2	2-3/8	6	3-1/4	6-3/8	2-13/16	2-3/8
2-3/16	1-3/4	7	2-1/2	6-3/4	3-3/8	6-7/8	3-1/8	2-3/8
2-7/16 2-1/2	1-13/16	7-1/2	2-3/4	7	3-1/2	7-7/16	3-1/2	2-3/4
2-15/16 3	2-23/32	8-1/2	2-1/2	8	4	8-5/16	3-15/16	2-3/4

FEATURES/BENEFITS PAGE B17-2	SPECIFICATION/HOW TO ORDER PAGE B17-4	NOMENCLATURE PAGE B17-5	SELECTION PAGE B17-6

SELECTION/DIMENSIONS

Sleeve Bearings - SOLIDLUBE

3/4" THRU 3" SOLIDLUBE LT INSERTS

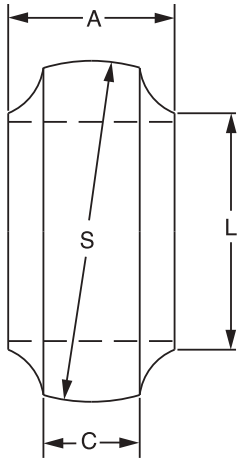

Series	Shaft Size	700 Series			1000 Series		
		Part No.	LT700 Series Description	Wt.	Part No.	LT1000 Series Description	Wt.
204	3/4	**033585**	INS-LT7-012	0.30	**033610**	INS-LT10-012	0.30
	20mm	***034454***	*INS-LT7-20M*	*0.14*	***034455***	*INS-LT10-20M*	*0.14*
205	7/8	**033586**	INS-LT7-014	0.50	**033611**	INS-LT10-014	0.50
	15/16	**033587**	INS-LT7-015	0.40	**033612**	INS-LT10-015	0.40
	1	**033588**	INS-LT7-100	0.30	**033613**	INS-LT10-100	0.30
	25mm	***034456***	*INS-LT7-25M*	*0.14*	***034457***	*INS-LT10-25M*	*0.14*
206	1-1/8	**033589**	INS-LT7-102	0.70	**033614**	INS-LT10-102	0.70
	1-3/16	**033590**	INS-LT7-103	0.60	**033615**	INS-LT10-103	0.60
	30mm	***034458***	*INS-LT7-30M*	*0.32*	***034459***	*INS-LT10-30M*	*0.32*
207	1-1/4	**033591**	INS-LT7-104	1.20	**033616**	INS-LT10-104	1.20
	1-3/8	**033592**	INS-LT7-106	1.00	**033617**	INS-LT10-106	1.00
	1-7/16	**033593**	INS-LT7-107	0.90	**033618**	INS-LT10-107	0.90
	1-1/2	**033594**	INS-LT7-108	0.80	**033619**	INS-LT10-108	0.80
	35mm	***034460***	*INS-LT7-35M*	*0.45*	***034461***	*INS-LT10-35M*	*0.45*
209	1-11/16	**033595**	INS-LT7-111	1.60	**033620**	INS-LT10-111	1.60
	1-3/4	**033596**	INS-LT7-112	1.40	**033621**	INS-LT10-112	1.40
	40mm	***034462***	*INS-LT7-40M*	*0.73*	***034463***	*INS-LT10-40M*	*0.73*
	45mm	***034464***	*INS-LT7-45M*	*0.64*	***034465***	*INS-LT10-45M*	*0.64*
210	1-15/16	**033597**	INS-LT7-115	1.80	**033622**	INS-LT10-115	1.80
	2	**033598**	INS-LT7-200	1.60	**033623**	INS-LT10-200	1.60
	50mm	***034466***	*INS-LT7-50M*	*0.73*	***034467***	*INS-LT10-50M*	*0.73*
211	2-3/16	**033599**	INS-LT7-203	2.30	**033624**	INS-LT10-203	2.30
212	2-7/16	**033600**	INS-LT7-207	3.20	**033625**	INS-LT10-207	3.20
	2-1/2	**033601**	INS-LT7-208	3.00	**033626**	INS-LT10-208	3.00
	60mm	***034468***	*INS-LT7-60M*	*1.45*	***034469***	*INS-LT10-60M*	*1.45*
215	2-15/16	**033602**	INS-LT7-215	5.80	**033627**	INS-LT10-215	5.80
	3	**034117**	INS-LT7-300	5.50	**034525**	INS-LT10-300	5.50
	70mm	***034470***	*INS-LT7-70M*	*2.50*	***034471***	*INS-LT10-70M*	*2.50*
	75mm	***034472***	*INS-LT7-75M*		***034473***	*INS-LT10-75M*	

FEATURES/BENEFITS PAGE B17-2	SPECIFICATION/HOW TO ORDER PAGE B17-4	NOMENCLATURE PAGE B17-5	SELECTION PAGE B17-6



Sleeve Bearings - SOLIDLUBE

3/4" THRU 3" SOLIDLUBE LT INSERTS

Series	Shaft Size	A	C	L	S
204	3/4 *20mm*	1 *25.4*	5/8 *15.9*	1-3/8 *34.9*	1.8445/1.8425 *46.850 / 46.800*
205	7/8 15/16 1 *25mm*	1-1/16 *27.0*	5/8 *15.9*	1-9/16 *39.7*	2.0415/2.0395 *51.854 / 51.803*
206	1-1/8 1-3/16 *30mm*	1-3/16 *30.2*	11/16 *17.5*	1-13/16 *46.0*	2.435/2.433 *61.849 / 61.798*
207	1-1/4 1-3/8 1-7/16 1-1/2 *35mm*	1-5/16 *33.3*	13/16 *20.6*	2-1/8 *54.0*	2.829/2.827 *71.857 / 71.806*
209	1-11/16 1-3/4 *40mm* *45mm*	1-9/16 *39.7*	13/16 *20.6*	2-9/16 *65.1*	3.3415/3.3395 *84.874 / 84.823*
210	1-15/16 2 *50mm*	1-5/8 *41.3*	7/8 *22.2*	2-13/16 *71.4*	3.5375/3.5355 *89.853 / 89.802*
211	2-3/16	1-3/4	15/16	3-1/8	3.932/3.930
212	2-7/16 2-1/2 *60mm*	1-13/16 *46.0*	1-1/16 *27.0*	3-1/2 *88.9*	4.326/4.324 *109.880 / 109.830*
215	2-15/16 3 *70mm* *75mm*	2-23/32 *69.1*	1-3/16 *30.2*	3-15/16 *100.0*	5.1135/5.1115 *129.883 / 129.832*

FEATURES/BENEFITS PAGE B17-2	SPECIFICATION/HOW TO ORDER PAGE B17-4	NOMENCLATURE PAGE B17-5	SELECTION PAGE B17-6

SELECTION/DIMENSIONS

Sleeve Bearings - SOLIDLUBE

3-7/16" THRU 5" SOLIDLUBE MM BEARING INSERTS

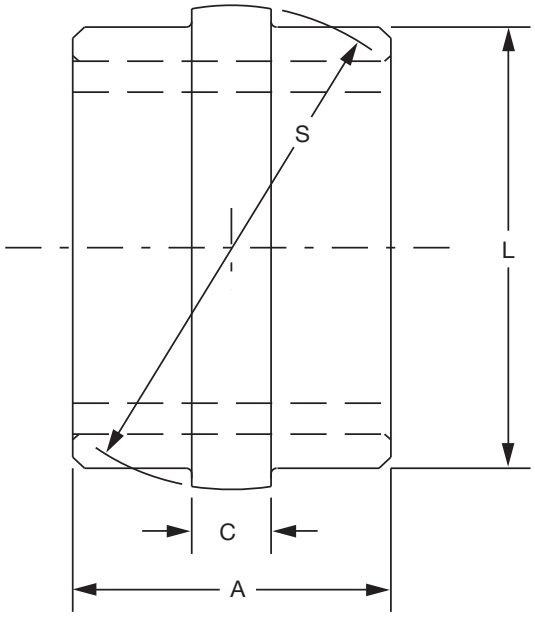

Shaft Size	700 Series		1000 Series		Wt.
	Part No.	Description	Part No.	Description	
3-7/16	**034438**	INS-MM7-307	**034439**	INS-MM10-307	6.4
3-1/2	**034440**	INS-MM7-308	**034441**	INS-MM10-308	6.2
3-15/16	**034442**	INS-MM7-315	**034443**	INS-MM10-315	10.0
4	**034444**	INS-MM7-400	**034445**	INS-MM10-400	9.8
4-7/16	**034446**	INS-MM7-407	**034447**	INS-MM10-407	20.0
4-1/2	**034448**	INS-MM7-408	**034449**	INS-MM10-408	19.7
4-15/16	**034450**	INS-MM7-415	**034451**	INS-MM10-415	27.0
5	**034452**	INS-MM7-500	**034453**	INS-MM10-500	26.5

Shaft Size	Wt.	A	C	L Dia.	S Spherical Dia.
3-7/16	6.4	3-1/2	7/8	4-7/8	5.182/5.180
3-1/2	6.2				
3-15/16	10.0	4	1-1/8	5-5/8	6.057/6.055
4	9.8				
4-7/16	20.0	4-1/2	1-1/4	6-15/16	7.370/7.367
4-1/2	19.7				
4-15/16	27.0	5	1-3/8	7-9/16	7.995/7.992
5	26.5				

♦ No Published Metric Dimensions For This Product

DODGE

Sleeve Bearings - SOLIDLUBE

7/8" THRU 1-1/2" SOLIDLUBE LT CYLINDERICAL UNITS

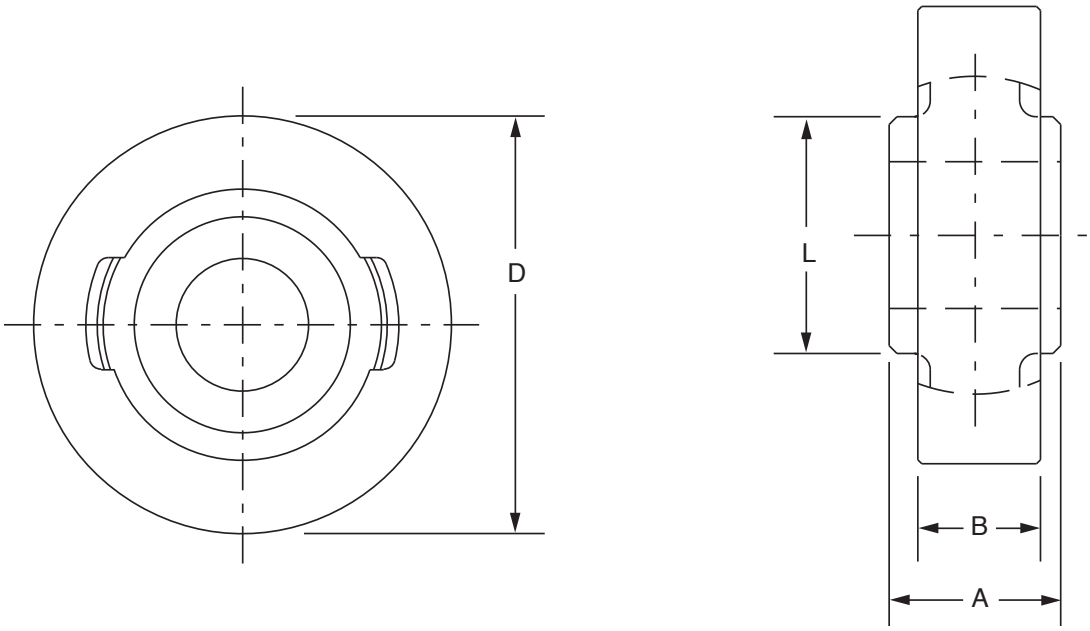

Shaft Size	LT700			LT1000		
	Part Number	Description	Wt.	Part Number	Description	Wt.
7/8	**033961**	CYL-LT7-014	1.5	**422596**	CYL-LT10-014	1.5
15/16	**033960**	CYL-LT7-015		**422595**	CYL-LT10-015	
1	**033962**	CYL-LT7-100		**422597**	CYL-LT10-100	
1-1/8	**033963**	CYL-LT7-102	29.0	**492598**	CYL-LT10-102	2.9
1-3/16	**033964**	CYL-LT7-103		**422599**	CYL-LT10-103	
1-1/4	**033965**	CYL-LT7-104	3.0	**422600**	CYL-LT10-104	3.0
1-3/8	**033966**	CYL-LT7-106		**422601**	CYL-LT10-106	
1-7/16	**033967**	CYL-LT7-107		**422602**	CYL-LT10-107	
1-1/2	**033968**	CYL-LT7-108		**422603**	CYL-LT10-108	

Shaft Size	A	B	D Dia. +.000 -.002	L
7/8 15/16 1	1-1/16	27/32	3-1/8	1- 9/16
1-1/8 1-3/16	1-3/16	15/16	3-1/2	1-13/16
1-1/4 1-3/8 1-7/16 1-1/2	1- 5/16	1-1/16	3-7/8	2-1/8

♦ No Published Metric Dimensions For This Product

SELECTION/DIMENSIONS

Sleeve Bearings - SOLIDLUBE

1-15/16" THRU 2-1/2"

SOLIDLUBE LT SCREW CONVEYOR HANGER BEARING

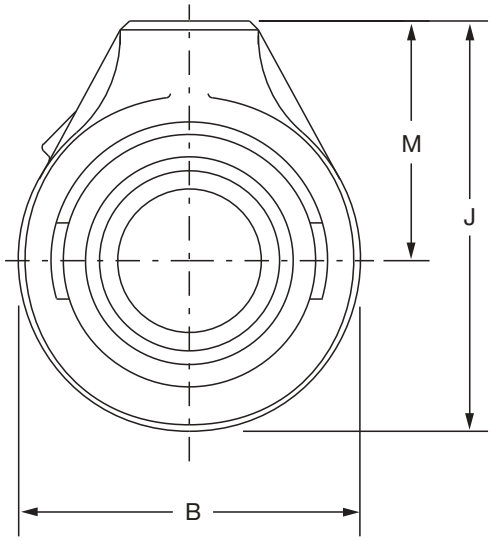

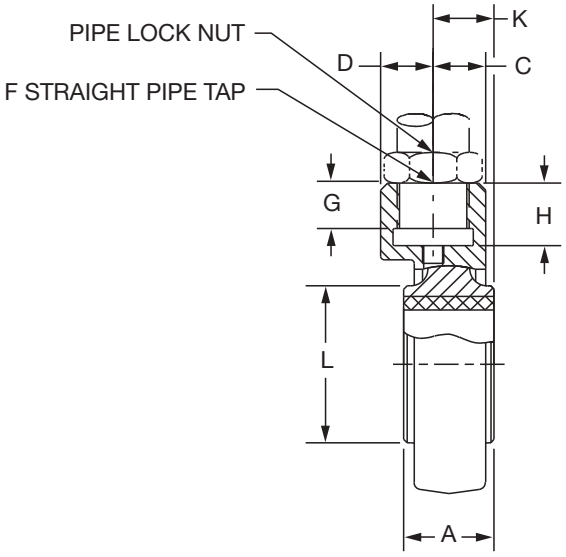

Series	Shaft Size	LT700 Series			LT1000 Series		
		Part No.	Description	Wt.	Part No.	Description	Wt.
210	1-15/16	**033937**	SCHB-LT7-115	5.8	**033952**	SCHB-LT10-115	1.9
	2	**033938**	SCHB-LT7-200	5.7	**033953**	SCHB-LT10-200	2.0
212	2-7/16	**033939**	SCHB-LT7-207	7.1	**033954**	SCHB-LT10-207	5.0
	2-1/2	**033940**	SCHB-LT7-208	7.0	**033955**	SCHB-LT10-208	4.8

Series	Shaft Size	A	B	C	D	F#	G	H	J	K	L	M
210	1-15/16 2	1-5/8	4-5//8	7/8	15/16	1	13/16	1-1/8	5-9/16	1-3/32	2-13/16	3-1/4
212	2-7/16 2-1/2	1-13/16	5-1/2	1-5/32	1-5/32	1-1/4	1-1/8	1-7/16	6-3/4	1-1/4	3-1/2	4

♦ No Published Metric Dimensions For This Product

Sleeve Bearings - SOLIDLUBE

1-1/8" THRU 2" SOLIDLUBE LT HANGER BEARINGS

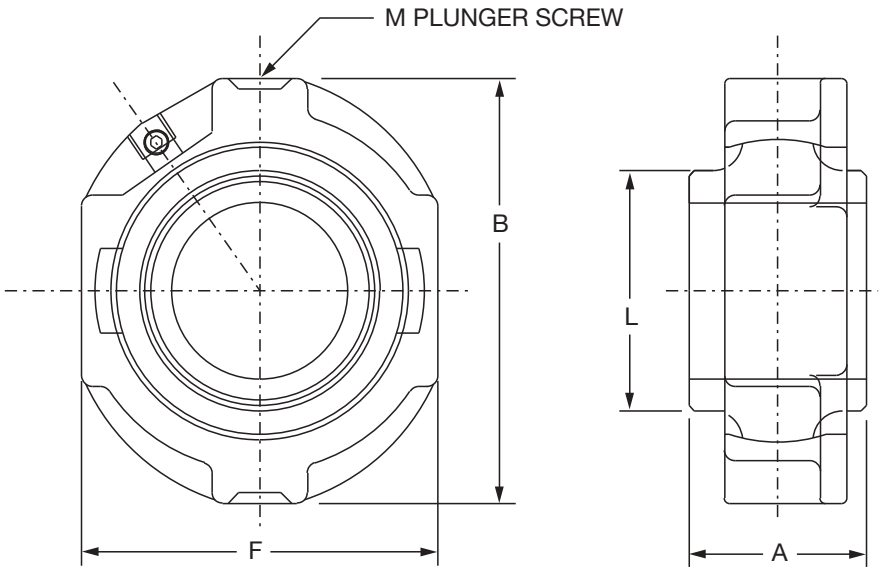

Shaft Size	LT700		LT1000		Wt.
	Part No.	Description	Part No.	Description	
1-1/8	**033890**	HNG-LT7-102	**033900**	HNG-LT10-102	1.9
1-3/16	**033891**	HNG-LT7-103	**033901**	HNG-LT10-103	2.0
1-1/4	**033892**	HNG-LT7-104	**033902**	HNG-LT10-104	3.1
1-3/8	**033893**	HNG-LT7-106	**033903**	HNG-LT10-106	3.0
1-7/16	**033894**	HNG-LT7-107	**033904**	HNG-LT10-107	2.9
1-1/2	**033895**	HNG-LT7-108	**033905**	HNG-LT10-108	2.8
1-15/16	**033896**	HNG-LT7-115	**033906**	HNG-LT10-115	5.0
2	**033897**	HNG-LT7-200	**033907**	HNG-LT10-200	4.8

Shaft Size	A	B	F	L	M
1-1/8 1-3/16	1-3/16	3-5/8	3	1-13/16	1/2
1-1/4 1-3/8 1-7/16 1-1/2	1-5/16	4-1/4	3-1/2	2-1/8	1/2
1-15/16 2	1-5/8	5	4-3/16	2-13/16	5/8

♦ No Published Metric Dimensions For This Product

SELECTION/DIMENSIONS

Sleeve Bearings - SOLIDLUBE

3/4" THRU 1-1/2" SOLIDLUBE LM800 PILLOW BLOCKS

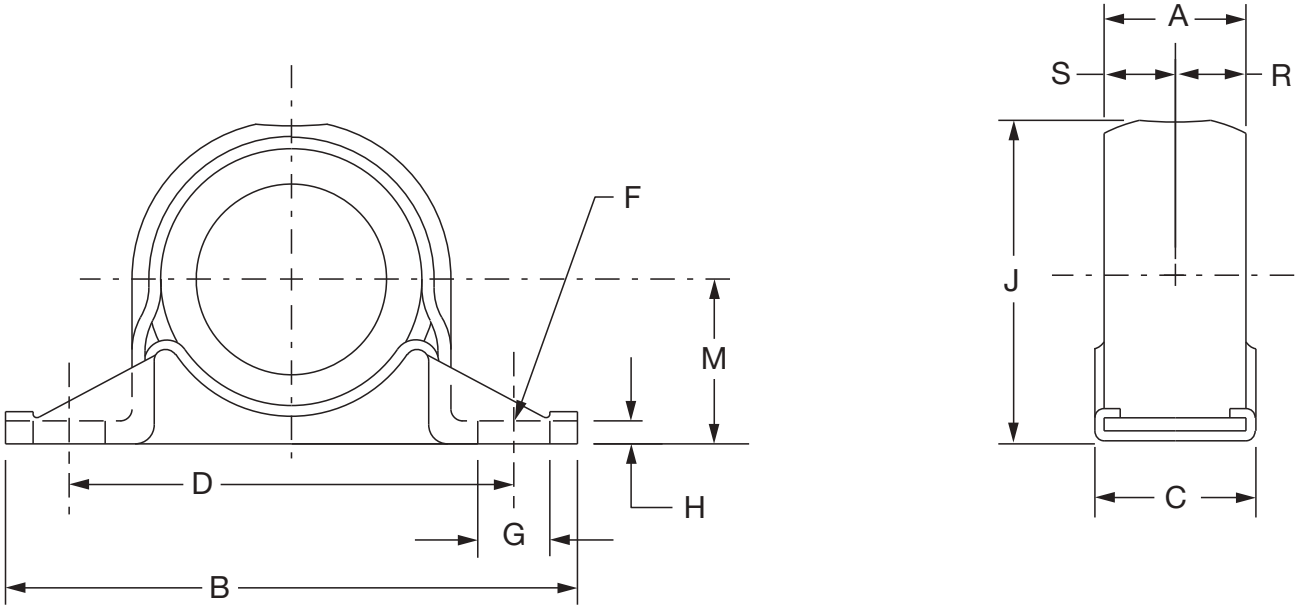

Shaft Size	Part No.	Description	Wt.	A	B	C	D
3/4	**033692**	P2B-LM8-012	.70	1	4	1-7/32	3
1	**033693**	P2B-LM8-100	.22				
1-1/4	**033694**	P2B-LM8-104	.70	1-1/8	4-1/2	1-11/32	3-1/2
1-1/2	**033695**	P2B-LM8-108	.50				

Shaft Size	F Bolt Dia.	G	H	J	M	R	S
3/4	3/8	9/16	5/32	2-1/16	1-1/16	1/2	1/2
1							
1-1/4	3/8	9/16	5/32	2-9/16	1-5/16	9/16	9/16
1-1/2							

♦ No Published Metric Dimensions For This Product

Sleeve Bearings - SOLIDLUBE

3/4" THRU 1-1/2" SOLIDLUBE LM800 4-BOLT FLANGE BEARING

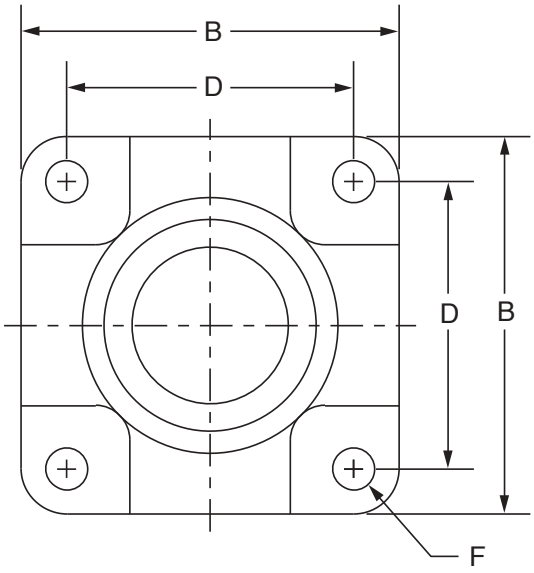

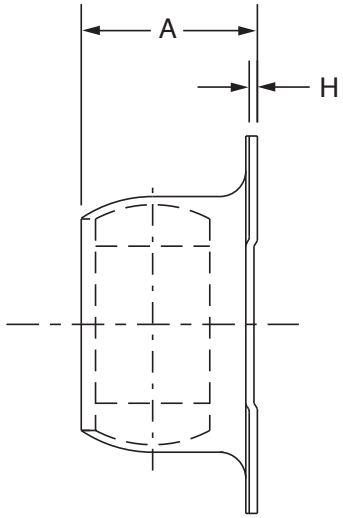

Shaft Size	Part No.	Description	Wt.	A
3/4	**033696**	F4B-LM8-012	.50	1-9/32
1	**033697**	F4B-LM8-100	.36	
1-1/4	**033698**	F4B-LM8-104	.50	1-11/16
1-1/2	**033699**	F4B-LM8-108	.50	

Shaft Size	B	D	F Bolt Dia	H
3/4	3-1/8	2-1/4	3/8	1/16
1				
1-1/4	3-5/8	2-3/4	3/8	1/16
1-1/2				

♦ No Published Metric Dimensions For This Product

FEATURES/BENEFITS PAGE B17-2 | SPECIFICATION/HOW TO ORDER PAGE B17-4 | NOMENCLATURE PAGE B17-5 | SELECTION PAGE B17-6

SELECTION



Sleeve Bearings - Babbitted and Bronze-Bushed

General Information

SCOPE-for Stock Babbitted and Bronze Bushed Bearings, Pillow Blocks and Take-Ups of the Rigid, Grease Lubricated Type.

Important-Referring to Table 1 on the opposite page: Table 1 ratings apply to the following DODGE Babbitted Sleeve Bearings:

- Solid Journals
- Split Babbitted Journals
- Rigid Babbitted Pillow Blocks
- Angle Babbitted Pillow Blocks
- Plate Type Flange Bearings
- Type H Take-Ups
- Type A and B Take-Ups

Table 2 ratings apply to DODGE Bronze Bushed Pillow Blocks:

- Split Bronze Bushed Journals
- Rigid Bronze Bushed Pillow Blocks
- Angle Bronze Bushed Pillow Blocks

Note - Ratings do not apply to BRONZOIL, or SOLIDLUBE pillow blocks.

Babbitted and bronze-bushed journal bearings DO NOT include grease fittings.

Reference - Flush type reducer bushings to be used with Part Number **405015** 1/8 NPT grease fitting:

To order 1/8 NPT grease fitting, confirm pipe tap dimension on bearing dimension page. If the pipe tap is 1/8, a flush type reducer bushing is not required. If the pipe tap is 1/4, 3/8 or 1/2; order the appropriate size flush type reducer bushing in addition to p/n 405015.

Part No.	Description
430081	1/2 x 1/8
430086	3/8 x 1/8
430087	1/4 x 1/8

Selection - Select a bearing from rating tables having a radial load equal to or greater than the Actual Radial Load, provided that operating conditions numbered 1 thru 7 are met.

If these conditions cannot be met, select a bearing for an Equivalent Radial Load to be obtained by multiplying the Actual Radial Load by a service factor depending on the specific application. Use a factor of up to 2.0 for areas in the rating table to the left of the zigzag line. Use a factor of up to 3.0 for areas to the right of the zigzag line.

Load ratings are based on industry standard ratings established by the Mechanical Power Transmission Association. (Standard No. 401)

Operating Conditions

1. Maintain adequate grease lubrication.
2. Maintain proper bearing alignment for uniform distribution of load under all operating conditions.
3. Normal running loads must not exceed ratings shown in the load tables. Starting and occasional peak loads should not exceed ratings by more than 100%.
4. Direction of load should not be closer than 30° to grease groove or closer than 30° to the joint between cap and base. If direction of load falls within this area which is not recommended, decrease maximum load by 50%.
5. The shaft journal surface finish must be equal to that of commercial steel shafting (about 32 micro inches) and the diameter within the tolerances of commercial steel shafting (+.000 / -.002)
6. Ambient temperature should not exceed 130°F for babbitted polymer limits and 300°F for bronze-bushed bearings. If the shaft transmits heat from a source such as an oven, the shaft temperature at the bearing should not exceed these ambient temperatures.
7. Bearings should be protected against adverse operating conditions.



Sleeve Bearings - Babbitted and Bronze-Bushed

Radial Load Ratings
(Refer To Instructions On Opposite Page)

Table 1: MPTA Radial Load Ratings for Babbitted Sleeve Bearings

Shaft Sizes	Radial Load Rating in Lbs. at Various Revolutions Per Minute															
	10	50	100	150	200	250	300	350	400	450	500	600	700	800	900	1000
1/2	100	100	100	95	95	95	95	95	90	90	90	85	85	85	80	80
5/8	150	150	145	145	140	140	135	135	135	130	130	125	120	115	110	110
3/4	180	175	175	170	170	165	160	160	155	155	150	145	140	130	125	120
7/8	260	255	250	245	240	235	230	225	220	215	210	200	190	180	150	...
15/16	280	275	265	260	255	250	245	240	235	225	220	210	200	185	105	...
1	295	290	285	280	270	265	260	250	245	240	230	220	205	...	...	...
1-1/8	415	410	400	390	380	370	355	345	335	325	315	295	245	...	...	...
1-3/16, 1-1/4	440	430	420	410	395	385	375	360	350	340	325	305	190	...	...	...
1-5/16, 1-3/8	585	570	555	535	520	505	485	470	455	435	420	345	...	...	...	...
1-7/16, 1-1/2	640	625	605	585	565	545	525	500	480	460	440	205	...	...	...	...
1-11/16, 1-3/4	875	850	820	785	755	720	690	655	625	590	340	...	...	...	...	...
1-15/16, 2	1150	1110	1060	1010	965	915	865	815	730	335	...	...	...	...	...	...
2-3/16, 2-1/4	1460	1400	1330	1260	1190	1120	1050	975	410	...	...	...	...	...	...	...
2-7/16, 2-1/2	1800	1730	1630	1530	1430	1340	1240	645	...	...	...	...	...	...	...	...
2-11/16, 2-3/4	2190	2080	1950	1820	1690	1560	1150	110	...	...	...	...	...	...	...	...
2-15/16, 3	2600	2470	2300	2130	1960	1790	675	...	...	...	...	...	...	...	...	...
3-7/16, 3-1/2	3550	3330	3060	2790	2520	1200	...	...	...	...	...	...	...	...	...	...
3-15/16, 4	4640	4310	3910	3500	2760	...	...	...	...	...	...	...	...	...	...	...
4-7/16, 4-1/2	5870	5410	4830	4250	1410	...	...	...	...	...	...	...	...	...	...	...
4-15/16, 5	7240	6600	5810	5010	...	...	...	...	...	...	...	...	...	...	...	...
5-7/16, 5-12	8750	7900	6840	4360												
5-15/16, 6	10410	9300	7910	2390												
6-7/16, 6-1/2	12200	10790	9020	...												
6-15/16, 7	14120	12360	10150	...												
7-7/16, 7-1/2	17270	14950	12050	...												
7-15/16, 8	18390	15750	10710	...												
9	20750	17360	4140													
10	22950	18760	...													
12	30700	23190	...													

For speeds lower than 10 rpm consult DODGE.

FEATURES/BENEFITS PAGE B17-2	SPECIFICATION/HOW TO ORDER PAGE B17-4	NOMENCLATURE PAGE B17-5	SELECTION/DIMENSIONS PAGE B17-10

SELECTION



Sleeve Bearings - Babbitted and Bronze-Bushed

Radial Load Ratings
(Refer To Instructions On Page B17-34)

Table 2: MPTA Radial Load Ratings for Bronze Bushed Sleeve Bearings

Shaft Sizes	Radial Load Rating in Lbs. at Various Revolutions Per Minute															
	10	50	100	150	200	250	300	350	400	450	500	600	700	800	900	1000
1/2	170	170	165	165	165	165	165	160	160	160	160	155	155	150	150	145
5/8	250	250	245	245	245	240	240	235	235	235	230	225	220	220	215	210
3/4	300	300	295	295	290	285	285	280	280	275	270	265	260	255	250	240
7/8	435	430	425	420	415	410	405	400	395	390	385	375	365	355	325	245
15/16	465	460	455	450	445	435	430	425	420	415	410	395	385	375	295	200
1	495	490	485	480	470	465	460	450	445	440	430	420	405	360	255	150
1-1/8	700	690	680	670	660	650	640	630	620	605	595	575	525	360	195	...
1-3/16, 1-1/4	735	730	715	705	695	680	670	660	645	635	625	600	485	300	115	...
1-5/16, 1-3/8	980	965	950	930	915	895	880	865	845	830	815	735	465	195	...	...
1-7/16, 1-1/2	1070	1050	1030	1010	995	975	955	935	915	895	875	635	315	...	...	...
1-11/16, 1-3/4	1470	1440	1410	1370	1340	1310	1280	1240	1210	1180	930	410	...	...	...	...
1-15/16, 2	1920	1880	1830	1790	1740	1690	1640	1590	1500	1110	715	...	...	...	...	...
2-3/16, 2-1/4	2440	2390	2320	2240	2170	2100	2030	1960	1390	830	265	...	...	...	...	...
2-7/16, 2-1/2	3020	2940	2850	2750	2650	2560	2460	1860	1090	...	...	...	...	...	...	...
2-11/16, 2-3/4	3660	3560	3430	3300	3170	3040	2620	1580	545	...	...	...	...	...	...	...
2-15/16, 3	4370	4230	4060	3890	3720	3550	2440	...	...	...	...	...	...	...	...	...
3-7/16, 3-1/2	5960	5740	5470	5200	4930	3610	1440	...	...	...	...	...	...	...	...	...
3-15/16, 4	7790	7460	7060	6650	5910	...	...	...	...	...	...	...	...	...	...	...
4-7/16, 4-1/2	9860	9400	8820	8240	5400	...	...	...	...	...	...	...	...	...	...	...
4-15/16, 5	12180	11540	10740	9950	4090	...	...	...	...	...	...	...	...	...	...	...
5-7/16, 5-1/2	14740	13880	12820	10340	1820											
5-15/16, 6	17530	16420	15040	9520	...											
6-7/16, 6-1/2	20560	19150	17390	7900	...											
6-15/16, 7	23840	22070	19870	5350	...											
7-7/16, 7-1/2	29170	26850	23950	1880	...											
7-15/16, 8	31090	28450	23410	...	...											
9	35150	31760	18540													
10	38950	34760	2220													
12	52300	45520	...													

For speeds lower than 10 rpm consult DODGE.

Sleeve Bearings - Bronze Bushings



U.S. PATENT NO. 3,071,419



Lower half of new bushing is installed by relieving shaft pressure, prying out old bushing and rolling in new one.



New bushing upper half is easily dropped into bearing cap. Grease grooves in the top of bore offer adequate lubrication.

- For Split Bronze Bushed Journal Bearings.
- For Rigid Bronze Bushed Pillow Blocks.
- For Angle Bronze Bushed Pillow Blocks.

These precision bushings are machined from quality cast cylinders of high grade leaded bronze. They are furnished in matched halves and sold in complete sets only. Grease grooves are provided in the top half for proper lubrication. Bushings are designed to be installed in the bearings listed above without removing the shaft or bearing base. A brass locking spool positions the bushing preventing lateral movement or rotation. This simple method minimizes down time and labor costs. They are particularly suited for heavy loads, elevated temperatures and corrosive conditions.

Bushings made of special alloys can be furnished where especially difficult heat problems may arise. They will be priced on application.

Bronze Bushing Sets ♠

Shaft Size	Bushing Sets†		Locking Spools*
	Part No.	Wt.	Part No.
1-15/16	**005055**	1.70	**005050**
2-3/16	**005056**	2.10	
2-7/16	**005057**	2.50	
2-11/16	**005058**	3.10	
2-15/16	**005059**	3.60	
3-7/16	**005060**	4.90	
3-15/16	**005061**	9.70	**005051**
4-7/16	**005062**	14	
4-15/16	**005063**	15	
5-7/16	**005064**	18	**005052**
5-15/16	**005065**	21	
6-1/2	**005066**	28	**005053**
7	**005067**	33	
7-1/2	**005117**	37	
8	**005068**	42	

♠ For other bushing material consult DODGE

† Part number is for one bushing set which includes upper and lower half

* Order separately if desired

FEATURES/BENEFITS PAGE B17-2	SPECIFICATION/HOW TO ORDER PAGE B17-4	NOMENCLATURE PAGE B17-5	SELECTION/DIMENSIONS PAGE B17-10

SELECTION/DIMENSIONS



Sleeve Bearings - Babbitted

1/2" THRU 3-7/16" SOLID BABBITTED JOURNAL BEARINGS

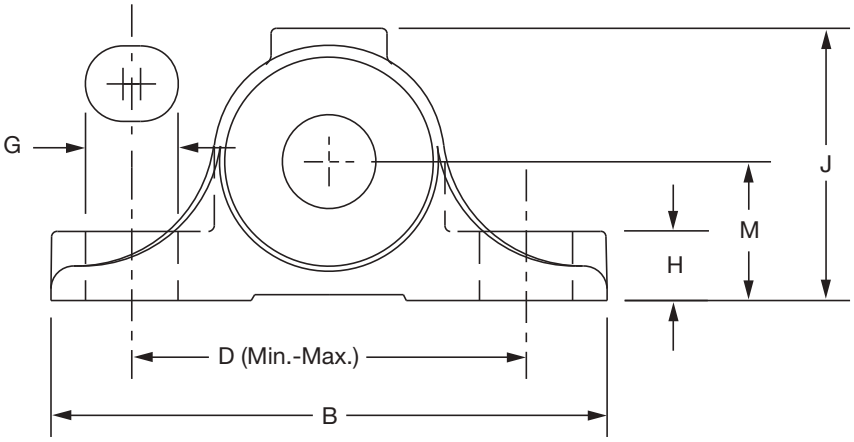

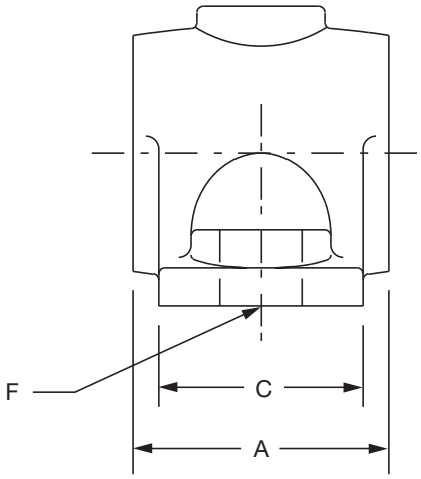

Shaft Size	Part No.	Description	Wt.	Frame	A	B	C	D	
								Min.	Max.
1/2	**006102**	P2B-BASO-008	0.6	LD-10	1-1/4	3	1	2-1/32	2-7/32
5/8	**006104**	P2B-BASO-010	1.0	LD-10	1-1/2	3-1/2	1-1/8	2-13/32	2-19/32
3/4	**006107**	P2B-BASO-012	0.9						
7/8	**006109**	P2B-BASO-014	1.7	LD-10	1-7/8	4	1-1/2	2-7/8	3-1/8
15/16	**006110**	P2B-BASO-015	1.6						
1	**006111**	P2B-BASO-100	1.5						
1-1/8	**006113**	P2B-BASO-102	2.7	LD-10	2-3/8	4-3/4	1-3/4	3-3/8	3-5/8
1-3/16	**006114**	P2B-BASO-103	2.6						
1-1/4	**006115**	P2B-BASO-104	2.5						
1-5/16	**006117**	P2B-BASO-105	4.4	. . .	2-7/8	5-1/2	2	3-7/8	4-1/8
1-3/8	**006118**	P2B-BASO-106	4.2						
1-7/16	**006119**	P2B-BASO-107	4.0						
1-1/2	**006120**	P2B-BASO-108	3.8						
1-11/16	**006124**	P2B-BASO-111	6.0	LD-20	3-3/8	6-1/4	2-1/4	4-11/32	4-21/32
1-3/4	**006125**	P2B-BASO-112	5.8						
1-15/16	**006128**	P2B-BASO-115	8.2	. . .	3-7/8	7	2-1/2	5-1/8	5-3/8
2	**006129**	P2B-BASO-200	8.0						
2-3/16	**006132**	P2B-BASO-203	12	. . .	4-3/8	7-3/4	2-3/4	5-1/2	6
2-7/16	**006136**	P2B-BASO-207	15	. . .	4-7/8	8-1/2	3	6	6-1/2
2-11/16	**006140**	P2B-BASO-211	19	. . .	5-3/8	9-1/4	3-1/4	6-1/2	7
2-15/16	**006144**	P2B-BASO-215	25	LD-45	5-7/8	10	3-1/2	7-9/32	7-23/32
3-3/16	**006148**	P2B-BASO-303	33	. . .	6-7/8	10-3/4	4	7-5/8	8-3/8
3-7/16	**006152**	P2B-BASO-307	30						

♦ No Published Metric Dimensions For This Product



Sleeve Bearings - Babbitted

1/2" THRU 3-7/16" SOLID BABBITTED JOURNAL BEARINGS

Shaft Size	F Bolt	G	H	J	M	Grease Cups #		
						Pipe Tap	No. Reqd	Size
1/2	5/16	1/2	3/8	1-15/32	3/4	1/8	1	0
5/8 3/4	5/16	1/2	1/2	1-23/32	7/8	1/8	1	0
7/8 15/16 1	3/8	9/16	5/8	2	1	1/8	1	0
1-1/8 1-3/16 1-1/4	7/16	21/32	11/16	2-7/16	1-1/4	1/8	1	0
1-5/16 1-3/8 1-7/16 1-1/2	1/2	11/16	7/8	2-3/4	1-3/8	1/4	1	0
1-11/16 1-3/4	9/16	13/16	1	3-1/16	1-1/2	1/4	1	0
1-15/16 2	5/8	13/16	1-1/8	3-1/2	1-3/4	1/4	1	0
2-3/16	11/16	1-1/32	1-1/4	3-13/16	1-7/8	3/8	1	2
2-7/16	3/4	1-1/8	1-3/8	4-1/4	2-1/8	3/8	1	2
2-11/16	13/16	1-5/32	1-1/2	4-9/16	2-1/4	3/8	1	2
2-15/16	7/8	1-5/32	1-11/16	5	2-1/2	3/8	1	2
3-3/16 3-7/16	1	1-7/16	1-7/8	5-7/16	2-3/4	3/8	1	2

Grease cups or pressure fittings may be obtained thru our distributors; one required per bearing.
See page B17-34 for grease fitting and reducer bushing part numbers

Note: All blocks have two base bolts and are one piece solid housings.

♦ No Published Metric Dimensions For This Product

SELECTION/DIMENSIONS



Sleeve Bearings - Babbitted

1/2" THRU 3-15/16" SPLIT BABBITTED JOURNAL BEARINGS

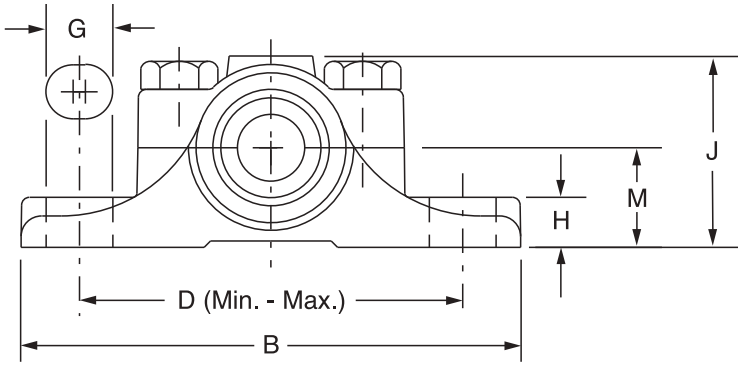

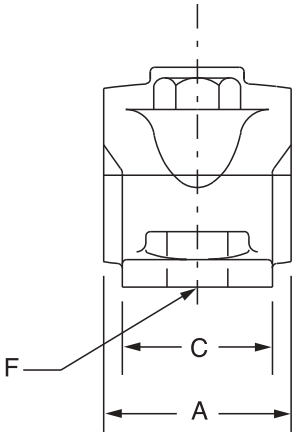

Shaft Size	Part No.	Description	Wt.	A	B	C	D	
							Min.	Max.
1/2	**006001**	P2B-BASP-008	0.8	1-1/4	3-3/4	1	2-3/4	3
5/8	**006004**	P2B-BASP-010	1.1	1-1/2	4-1/4	1-1/8	3-1/8	3-3/8
3/4	**006007**	P2B-BASP-012	1.0					
7/8	**006010**	P2B-BASP-014	1.9	2	4-3/4	1-1/2	3-1/2	3-3/4
15/16	**006013**	P2B-BASP-015	1.8					
1	**006016**	P2B-BASP-100	1.7					
1-1/16	**006019**	P2B-BASP-101	3.3	2-1/2	5-1/4	1-3/4	4	4-1/4
1-1/8	**006022**	P2B-BASP-102	3.2					
1-3/16	**006025**	P2B-BASP-103	3.1					
1-1/4	**006028**	P2B-BASP-104	3.0					
1-5/16	**006031**	P2B-BASP-105	5.0	3	6-1/4	2	4-13/16	4-15/16
1-3/8	**006034**	P2B-BASP-106	4.8					
1-7/16	**006037**	P2B-BASP-107	1.6					
1-1/2	**006040**	P2B-BASP-108	4.4					
1-5/8	**006043**	P2B-BASP-110	6.6	3-3/8	6-3/4	2-1/4	5-1/8	5-3/8
1-11/16	**006046**	P2B-BASP-111	6.4					
1-3/4	**006049**	P2B-BASP-112	6.2					
1-15/16	**006052**	P2B-BASP-115	8.6	4	7-1/2	2-1/2	5-15/16	6-1/16
2	**006055**	P2B-BASP-200	8.3					
2-3/16	**006058**	P2B-BASP-203	12.2	4-1/2	8-1/2	2-3/4	6-1/4	6-3/4
2-1/4	**006061**	P2B-BASP-204	11.9					
2-7/16	**006064**	P2B-BASP-207	15.6	5	9-1/4	3	6-7/8	7-3/8
2-1/2	**006067**	P2B-BASP-208	15.1					
2-11/16	**006070**	P2B-BASP-211	20.0	5-3/8	10	3-5/16	7-1/2	8
2-15/16	**006073**	P2B-BASP-215	24.2	6	10-3/4	3-1/2	8-1/4	8-3/4
3	**006076**	P2B-BASP-300	23.7					
3-7/16	**006079**	P2B-BASP-307	40	6-7/8	12	4	8-7/8	9-5/8
3-15/16	**006082**	P2B-BASP-315	53	7-7/8	13-1/2	4-1/2	10-3/32	10-29/32

♦ No Published Metric Dimensions For This Product



Sleeve Bearings - Babbitted

1/2" THRU 3-15/16" SPLIT BABBITTED JOURNAL BEARINGS

Shaft Size	F Bolt	G	H	J	M	Grease Cups #		
						Pipe Tap	No. Req'd	Size
1/2	5/16	1/2	23/64	1-15/32	3/4	1/8	1	0
5/8 3/4	5/16	1/2	1/2	1-23/32	7/8	1/8	1	0
7/8 15/16 1	3/8	9/16	9/16	2	1	1/8	1	0
1-1/16 1-1/8 1-3/16 1-1/4	7/16	5/8	5/8	2-7/16	1-1/4	1/8	1	0
1-5/16 1-3/8 1-7/16 1-1/2	9/16	11/16	3/4	2-3/4	1-3/8	1/4	1	0
1-5/8 1-11/16 1-3/4	9/16	25/32	13/16	3-1/16	1-1/2	1/4	1	0
1-15/16 2	11/16	13/16	15/16	3-1/2	1-3/4	1/4	1	0
2-3/16 2-1/4	11/16	1	1	3-13/16	1-7/8	3/8	1	2
2-7/16 2-1/2	11/16	1	1-1/8	4-1/4	2-1/8	3/8	1	2
2-11/16	13/16	1-1/8	1-3/16	4-9/16	2-1/4	3/8	1	2
2-15/16 3	13/16	1-1/8	1-5/16	5	2-1/2	3/8	1	2
3-7/16	15/16	1-3/8	1-1/2	5-3/4	2-7/8	1/2	1	3
3-15/16	1	1-1/2	1-5/8	6-7/16	3-1/8	1/2	1	3

Grease cups or pressure fittings may be obtained thru our distributors; one required per bearing.
See page B17-34 for grease fitting and reducer bushing part numbers

Note: All blocks have 2 base bolts and 2 cap bolts. Housings are split.

♦ No Published Metric Dimensions For This Product

SELECTION/DIMENSIONS



Sleeve Bearings - Babbitted

1-15/16" THRU 8" RIGID BABBITTED JOURNAL BEARINGS (SPLIT HOUSING)

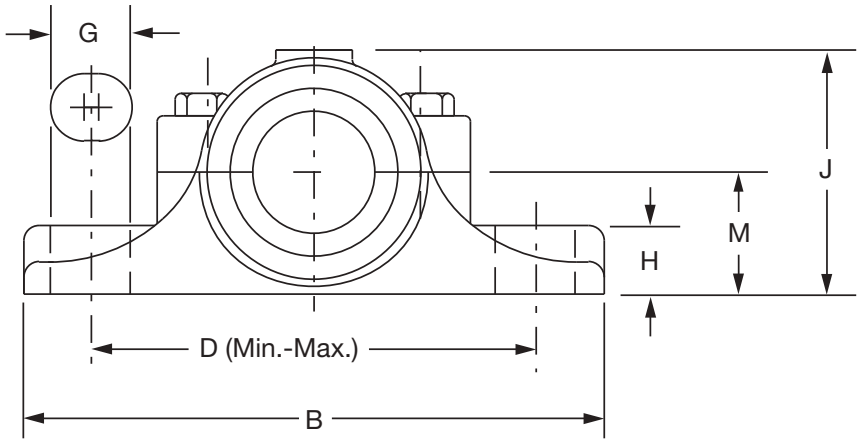

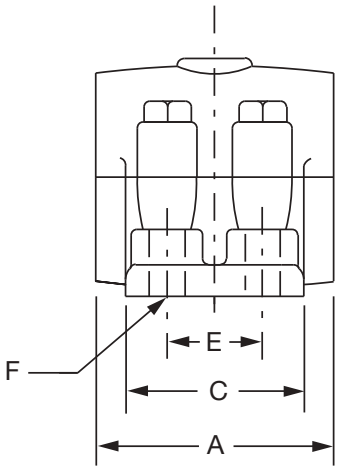

Shaft Size	Part No.	Description	Wt.	A	B	C	D	
							Min.	Max.
1-15/16	**004060**	P4B-BAR-115	10.6	4	8-1/4	3-1/2	6-3/8	6-5/8
2	**004063**	P4B-BAR-200						
2-3/16	**004066**	P4B-BAR-203	13.2	4-1/2	8-1/2	3-1/2	6-5/8	6-7/8
2-1/4	**004069**	P4B-BAR-204						
2-7/16	**004072**	P4B-BAR-207	18.4	5	10-1/4	4	7-3/4	8-1/4
2-1/2	**004075**	P4B-BAR-208						
2-11/16	**004078**	P4B-BAR-211	22.4	5-1/2	10-1/2	4-1/4	8	8-1/2
2-15/16	**004081**	P4B-BAR-215	30.6	6	11	4-1/2	8-1/2	9
3	**004084**	P4B-BAR-300						
3-3/16	**004087**	P4B-BAR-303	50.2	7	13	5	10-1/8	10-7/8
3-7/16	**004090**	P4B-BAR-307						
3-1/2	**004093**	P4B-BAR-308						
3-15/16	**004096**	P4B-BAR-315	64	8	14-3/4	5-1/2	11-1/2	12-1/2
4-7/16	**004099**	P4B-BAR-407	88	9	16-1/2	6-1/4	13	14
4-15/16	**004102**	P4B-BAR-415	113	10	18	7	14-3/8	15-5/8
5-7/16	**004105**	P4B-BAR-507	147	11	19-1/4	7-3/4	15-1/8	16-3/8
5-15/16	**004108**	P4B-BAR-515	184	12	20-1/2	8-1/2	15-7/8	17-1/8
6-1/2	**004113**	P4B-BAR-608	255	13	22	9-1/2	17-3/8	18-5/8
7	**004114**	P4B-BAR-700	310	14	23	10	18-3/8	19-5/8
7-1/2	**004115**	P4B-BAR-708	370	15	24-1/2	10-1/2	19-3/8	20-5/8
8	**004116**	P4B-BAR-800	430	16	26	11	20-3/4	22-1/4

♦ No Published Metric Dimensions For This Product



Sleeve Bearings - Babbitted

1-15/16” THRU 8” RIGID BABBITTED JOURNAL BEARINGS (SPLIT HOUSING)

Shaft Size	E	F Bolt	G	H	J	M	Grease Cups #		
							Pipe Tap	No. Reqd	Size
1-15/16 2	1-3/4	1/2	3/4	7/8	3-1/2	1-3/4	1/4	1	1
2-3/16 2-1/4	1-3/4	1/2	3/4	1	3-13/16	1-7/8	3/8	1	2
2-7/16 2-1/2	2	5/8	1	1-1/8	4-1/4	2-1/8	3/8	1	2
2-11/16	2-1/4	5/8	1	1-1/4	4-9/16	2-1/4	3/8	1	2
2-15/16 3	2-1/2	5/8	1	1-3/8	5	2-1/2	3/8	1	2
3-3/16 3-7/16 3-1/2	2-3/4	3/4	1-1/4	1-1/2	5-29/32	3-1/4	1/2	1	3
3-15/16	3	3/4	1-3/8	1-5/8	6-17/32	3-1/2	1/2	1	4
4-7/16	3-1/2	7/8	1-1/2	1-3/4	7-17/32	4-1/8	1/2	1	4
4-15/16	4	7/8	1-5/8	1-7/8	8-7/32	4-1/2	1/2	1	4
5-7/16	4-1/2	1	1-3/4	2	9-1/32	5	1/2	2	3
5-15/16	5	1-1/8	1-7/8	2-1/8	9-7/8	5-1/2	1/2	2	3
6-1/2	5-1/2	1-1/8	1-7/8	2-1/4	10-23/32	6	1/2	2	4
7	6	1-1/4	2	2-3/8	11-1/2	6-1/2	1/2	2	4
7-1/2	6-1/4	1-3/8	2-1/8	2-1/2	12-5/32	6-3/4	1/2	2	4
8	6-3/4	1-3/8	2-1/4	2-1/2	12-3/4	7	1/2	2	4

Grease cups or pressure fittings may be obtained thru our distributors; one required per bearing up thru 4-15/16” sizes and two required for balance of sizes.

See page B17-34 for grease fitting and reducer bushing part number.

Note: 1-15/16 - 3” sizes have 2 cap bolts. 3-3/16 and larger sizes have 4 cap bolts (shown in diagram). Housings are split.

♦ No Published Metric Dimensions For This Product

SELECTION/DIMENSIONS

Sleeve Bearings - Babbitted

1-15/16" THRU 8" ANGLE BABBITTED PILLOW BLOCKS

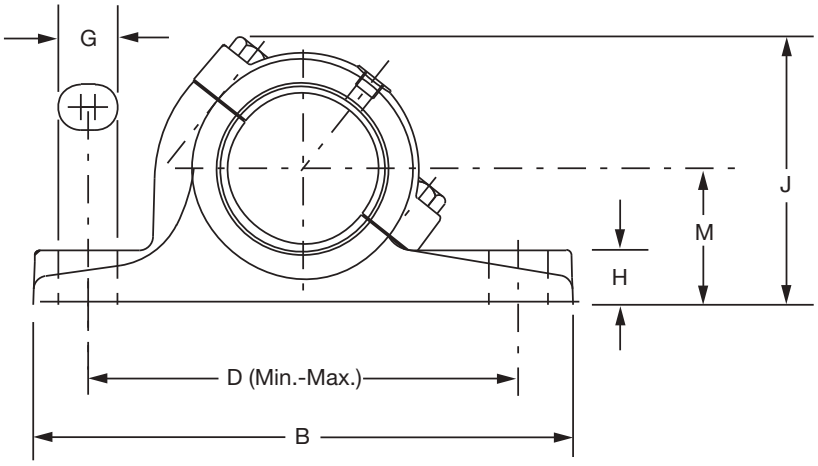

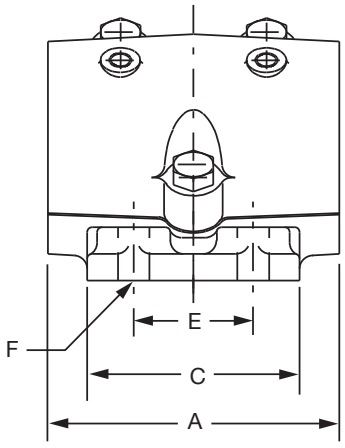

Shaft Size	Part No.	Description	Wt.	Used on Frame	A	B	C	D	
								Min.	Max.
1-15/16	**230050**	P4B-BAA-115	11	HD-200	4	8-1/4	3-1/2	6-5/16	6-11/16
2-3/16	**230053**	P4B-BAA-203	14	HD-200	4-1/2	8-1/2	3-1/2	6-9/16	6-15/16
2-7/16	**230056**	P4B-BAA-207	20	HD-200	5	10-1/4	4	7-11/16	8-5/16
2-11/16	**230059**	P4B-BAA-211	24	HB-250	5-1/2	10-1/2	4-1/4	7-15/16	8-9/16
2-15/16	**230062**	P4B-BAA-215	28	HD-250	6	11	4-1/2	8-7/16	9-1/16
3-7/16	**230065**	P4B-BAA-307	47	HD-300	7	13	5	10-1/16	10-15/16
3-15/16	**230068**	P4B-BAA-315	61	HD-350	8	14-3/4	5-1/2	11-7/16	12-9/16
4-7/16	**230071**	P4B-BAA-407	84	HD-400	9	16-9/16	6-5/16	12-15/16	14-1/16
4-15/16	**230074**	P4B-BAA-415	112	HD-400	10	18	7	14-5/16	15-11/16
5-7/16	**230077**	P4B-BAA-507	154	HD-500	11	19-3/4	8	15-1/16	16-7/16
5-15/16	**230080**	P4B-BAA-515	184	HD-500	12	20-1/2	8-1/2	15-13/16	17-3/16
6-1/2	**230134**	P4B-BAA-608	220	...	13	22	9-5/8	17-3/16	18-13/16
7	**230137**	P4B-BAA-700	275	...	14	23	10	18-1/4	19-3/4
8	**230140**	P4B-BAA-800	400	...	16	26	11	20-11/16	22-5/16

♦ No Published Metric Dimensions For This Product



Sleeve Bearings - Babbitted

1-15/16” THRU 8” ANGLE BABBITTED PILLOW BLOCKS

Shaft Size	E	F Bolt	G	H	J	M	Grease Cups #		
							Pipe Tap	No. Reqd	Size
1-15/16	1-3/4	1/2	3/4	7/8	4-11/16	2-1/4	1/4	1	1
2-3/16	1-3/4	1/2	3/4	1	5-1/8	2-1/2	3/8	1	2
2-7/16	2	5/8	1	1-1/8	5-9/16	2-3/4	3/8	1	2
2-11/16	2-1/4	5/8	1	1-1/4	5-7/8	3	3/8	1	2
2-15/16	2-1/2	5/8	1	1-3/8	6-3/8	3-1/4	3/8	1	2
3-7/16	2-3/4	3/4	1-1/4	1-1/2	7-1/8	3-1/2	1/2	1	3
3-15/16	3	3/4	1-3/8	1-21/32	7-1/2	3-3/4	1/2	1	4
4-7/16	3-1/2	7/8	1-1/2	1-3/4	8-1/2	4-1/8	1/2	1	4
4-15/16	4	7/8	1-5/8	1-7/8	9-3/16	4-1/2	1/2	1	4
5-7/16	4-1/2	1-1/8	1-7/8	2	10-1/4	5	1/2	2	3
5-15/16	5	1-1/8	1-7/8	2-1/8	11-1/16	5-1/2	1/2	2	3
6-1/2	5-1/2	1-1/8	2	2-1/4	12-1/8	6	1/2	2	4
7	6	1-1/8	2	2-3/8	13	6-1/2	1/2	2	4
8	6-3/4	1-3/8	2-1/4	2-1/2	14-1/16	7	1/2	2	4

\# Grease cups or pressure fittings may be obtained thru our distributors; one required per bearing up thru 4-15/16, sizes and two required for balance of sizes.

See page B17-34 for grease fitting and reducer bushing part number.

Note: 1-15/16 - 3-7/16” sizes have 2 cap bolts.

3-7/16 - 5-15/16” have 3 cap bolts (shown in diagram).

6-1/2” and larger sizes have 4 cap bolts.

♦ No Published Metric Dimensions For This Product

SELECTION/DIMENSIONS

Sleeve Bearings - Babbitted

TYPE H BABBITTED TAKE-UP BEARINGS

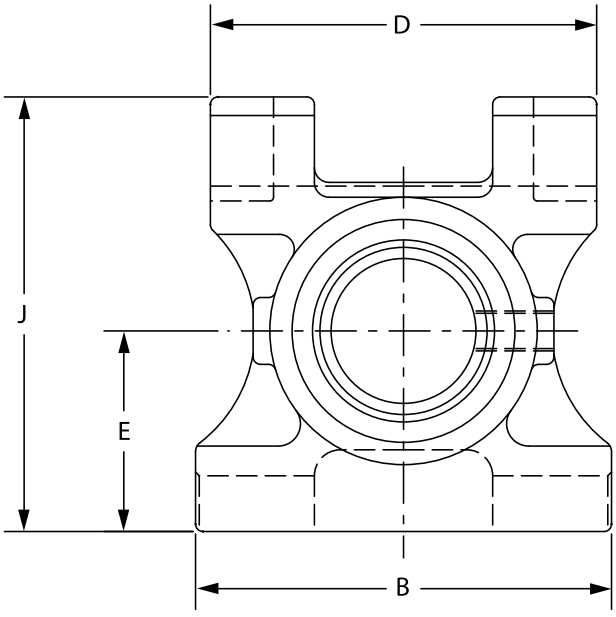

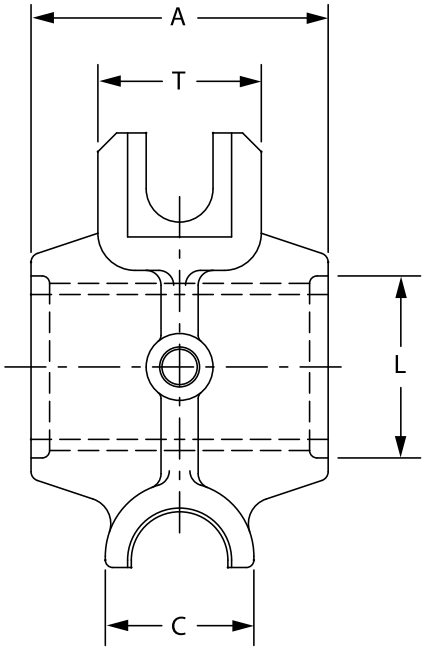

Shaft Size	Part No.	Description	Frame Size
1-15/16	**012215**	TP-H-115	TP10
2-3/16	**012216**	TP-H-203	TP10
2-7/16	**012217**	TP-H-207	TP30
2-15/16	**012218**	TP-H-215	TP30
3-7/16	**012219**	TP-H-307	TP50
3-15/16	**012220**	TP-H-315	TP50



Sleeve Bearings - Babbitted

TYPE H BABBITTED TAKE-UP BEARINGS

Shaft Size	Weight lbs.	Frame Size	A	B	C	D	E	J	L	T	Pipe Tap	Cup Size
1-15/16	12.5	TP10	4	6	2-3/8	5-1/2	3	6-1/8	2-7/16	2-3/8	1/4	0
2-3/16	12.6	TP10	4-1/2	6	2-3/8	5-1/2	3	6-1/8	2-3/4	2-3/8	3/8	2
2-7/16	22.4	TP30	5	7	2-1/2	6-1/2	3-3/8	7-5/16	3-1/16	2-3/4	3/8	2
2-15/16	23.6	TP30	6	7	2-1/2	6-1/2	3-3/8	7-5/16	3-9/16	2-3/4	3/8	2
3-7/16	46.0	TP50	7	9	3-1/8	8-1/2	4-1/2	9-5/8	4-3/16	3-1/8	3/8	2
3-15/16	47.2	TP50	8	9	3-1/8	8-1/2	4-1/2	9-5/8	4-11/16	3-1/8	3/8	2

FEATURES/BENEFITS PAGE B17-2	SPECIFICATION/HOW TO ORDER PAGE B17-4	NOMENCLATURE PAGE B17-5	SELECTION PAGE B17-6

SELECTION/DIMENSIONS

Sleeve Bearings - Babbitted

1-15/16" THRU 4-15/16" PLATE TYPE BABBITTED FLANGE BEARING

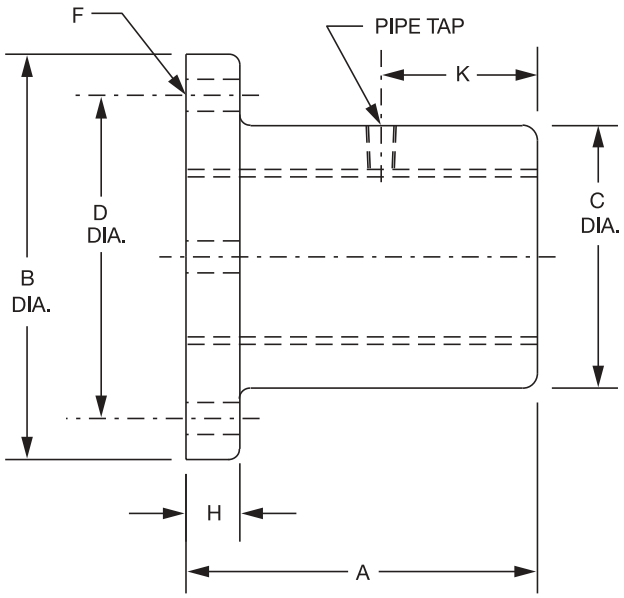

Shaft	Part No.	Description	Wt.	A	B Dia.	C Dia.	D Dia.
15/16	**037001**	F4B-BAP-015	2	2	4	2	3
1	**037010**	F4B-BAP-100					
1-3/16	**037002**	F4B-BAP-103	3.6	2-1/2	4-1/2	2-1/2	3-1/2
1-1/4	**037011**	F4B-BAP-104					
1-7/16	**037003**	F4B-BAP-107	5.3	3	5-1/4	2-3/4	4
1-1/2	**037012**	F4B-BAP-108					
1-11/16	**037004**	F4B-BAP-111	8.6	3-1/2	6	3-1/4	4-3/4
1-15/16	**037005**	F4B-BAP-115	12	4	6-1/2	3-3/4	5-1/4
2	**037013**	F4B-BAP-200					
2-3/16	**037006**	F4B-BAP-203	17	4-1/2	7-1/2	4	5-3/4
2-7/16	**037007**	F4B-BAP-207	22	5	8	4-1/2	6-1/4
2-11/16	**037017**	F4B-BAP-211	32	5-1/2	9	5	7
2-15/16	**037009**	F4B-BAP-215	35	6	9-1/2	5-1/4	7-1/2
3-7/16	**037020**	F4B-BAP-307	53	7	10-3/8	6-1/4	8-1/2
3-15/16	**037022**	F4B-BAP-315	70	8	11-1/8	6-7/8	9-1/4
4-7/16	**037024**	F4B-BAP-407	103	9	12-5/8	7-3/4	10-1/2
4-15/16	**037026**	F4B-BAP-415	140	10	14	8-1/2	11-1/2

♦ No Published Metric Dimensions For This Product



Sleeve Bearings - Babbitted

1-15/16" THRU 4-15/16" PLATE TYPE BABBITTED FLANGE BEARING

Shaft	F Bolt		H	K	Grease Cups #	
	No.	Size			Pipe Tap	Size
15/16 1	4	3/8	3/8	3/4	1/8	0
1-3/16 1-1/4	4	3/8	7/16	1	1/8	0
1-7/16 1-1/2	4	1/2	1/2	1-1/4	1/4	0
1-11/16	4	1/2	5/8	1-1/2	1/4	0
1-15/16 2	4	1/2	11/16	1-5/8	1/4	1
2-3/16	4	5/8	3/4	1-7/8	3/8	2
2-7/16	4	5/8	7/8	2-1/8	3/8	2
2-11/16	4	3/4	1	1-3/4	3/8	2
2-15/16	4	3/4	1	2-1/4	3/8	2
3-7/16	6	3/4	1	2-3/4	1/2	3
3-15/16	6	3/4	1-1/8	3-1/4	1/2	4
4-7/16	6	7/8	1-1/4	3-3/4	1/2	4
4-15/16	6	1	1-3/8	4-1/4	1/2	4

Grease cups or pressure fittings may be obtained thru our distributors; one required per bearing.

See page B13-10 for grease fitting and reducer bushing part number.

♦ No Published Metric Dimensions For This Product

SELECTION/DIMENSIONS

Sleeve Bearings - Bronze-Bushed

1-15/16" THRU 2-15/16" BRONZE-BUSHED SPLIT JOURNAL BEARING

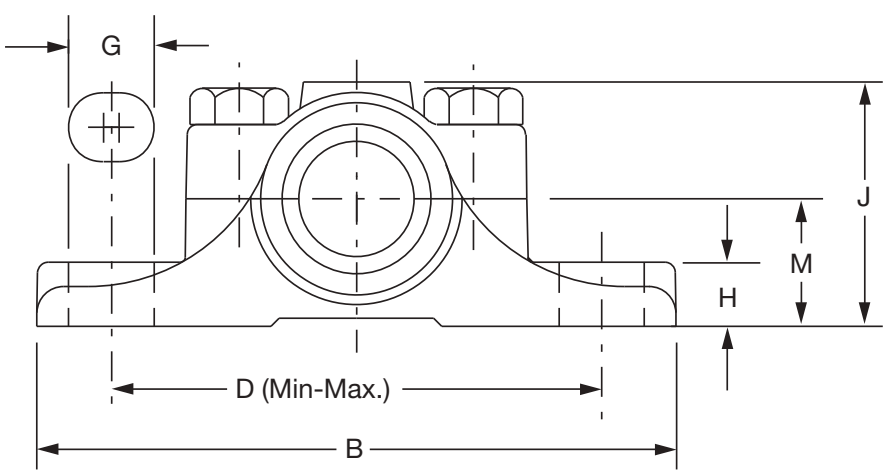

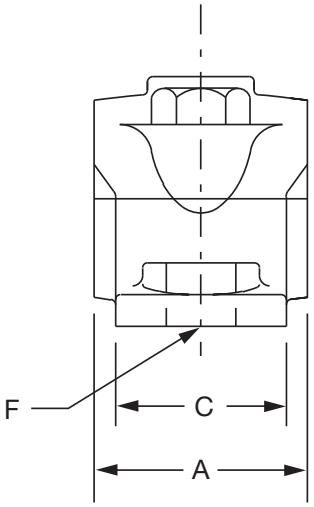

Shaft Size	Part No.	Description	Wt.	A	B	C	D	
							Min.	Max.
1-15/16	**005070**	P2B-BZSP-115	9	3-7/8	7-1/2	2-1/2	5-15/16	6-1/16
2-3/16	**005073**	P2B-BZSP-203	12	4-3/8	8-1/2	2-3/4	6-1/4	6-3/4
2-7/16	**005076**	P2B-BZSP-207	15	4-7/8	9-1/4	3	6-7/8	7-3/8
2-11/16	**005079**	P2B-BZSP-211	20	5-3/8	10	3-1/4	7-1/2	8
2-15/16	**005082**	P2B-BZSP-215	24	6	10-3/4	3-1/2	8-1/4	8-3/4

Shaft Size	F Bolt	G	H	J	M	Grease Cups #		
						Pipe Tap	No. Req'd	Size
1-15/16	5/8	13/16	15/16	3-1/2	1-3/4	1/4	1	0
2-3/16	5/8	1	1	3-7/8	1-7/8	3/8	1	2
2-7/16	5/8	1	1-1/8	4-1/4	2-1/8	3/8	1	2
2-11/16	3/4	1-1/8	1-3/16	4-9/16	2-1/4	3/8	1	2
2-15/16	3/4	1-1/8	1-5/16	5	2-1/2	3/8	1	2

Grease cups or pressure fittings may be obtained thru our distributors; one required per bearing.

See page B17-34 for grease fitting and reducer bushing part number.

Note: All sizes have 2 bolt base and 2 cap bolts. Housings are split.

♦ No Published Metric Dimensions For This Product

Sleeve Bearings - Bronze-Bushed

3-7/16" THRU 8" BRONZE-BUSHED RIGID SPLIT JOURNAL BEARING

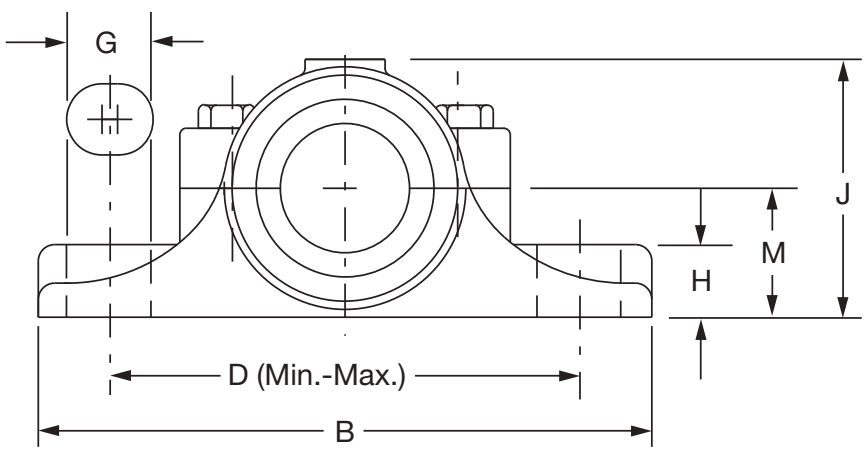

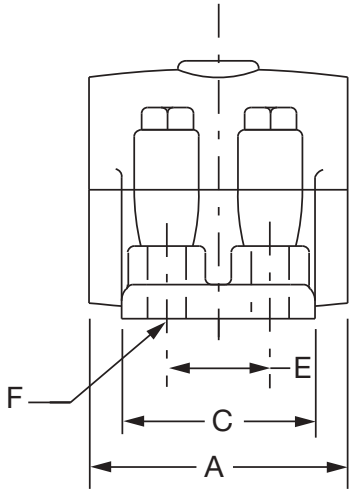

Shaft Size	Part No.	Description	Wt.	A	B	C	D	
							Min.	Max.
3-7/16	**005085**	P4B-BZR-307	47	7	13	5	10-1/8	10-7/8
3-15/16	**005088**	P4B-BZR-315	64	8	14-3/4	5-1/2	11-1/2	12-1/2
4-7/16	**005091**	P4B-BZR-407	89	9	16-1/2	6-1/4	13	14
4-15/16	**005094**	P4B-BZR-415	115	10	18	7	14-3/8	15-5/8
5-7/16	**005097**	P4B-BZR-507	137	11	19-1/4	7-3/4	15-1/8	16-3/8
5-15/16	**005100**	P4B-BZR-515	180	12	20-1/2	8-1/2	15-7/8	17-1/8
6-1/2	**005195**	P4B-BZR-608	255	13	22	9-1/2	17-3/8	18-5/8
7	**005198**	P4B-BZR-700	310	14	23	10	18-3/8	19-5/8
7-1/2	**005199**	P4B-BZR-708	370	15	24-1/2	10-1/2	19-3/8	20-5/8
8	**005201**	P4B-BZR-800	430	16	26	11	20-3/4	22-1/4

Shaft Size	E	F Bolt	G	H	J	M	Grease Cups #		
							Pipe Tap	No. Reqd	Size
3-7/16	2-3/4	3/4	1-1/4	1-1/2	6-1/32	3-1/4	1/2	1	3
3-15/16	3	3/4	1-3/8	1-5/8	6-1/2	3-1/2	1/2	1	4
4-7/16	3-1/2	7/8	1-1/2	1-3/4	7-15/32	4-1/8	1/2	1	4
4-15/16	4	7/8	1-5/8	1-7/8	8-1/32	4-1/2	1/2	1	4
5-7/16	4-1/2	1	1-3/4	2	8-15/16	5	1/2	2	3
5-15/16	5	1-1/8	1-7/8	2-1/8	9-13/16	5-1/2	1/2	2	3
6-1/2	5-1/2	1-1/8	1-7/8	2-1/4	10-11/16	6	1/2	2	4
7	6	1-1/4	2	2-3/8	11-7/16	6-1/2	1/2	2	4
7-1/2	6-1/4	1-3/8	2-1/8	2-1/2	12-1/8	6-3/4	1/2	2	4
8	6-3/4	1-3/8	2-1/4	2-1/2	12-11/16	7	1/2	2	4

Grease cups or pressure fittings may be obtained thru our distributors; one required per pillow block u thru 4-15/16" sizes and two required for balance of sizes.

See page B17-34 for grease fitting and reducer bushing part number.

Note: All sizes have 4 base bolts. - 3-7/16" and larger sizes have 4 cap bolts. Housings are split.

♦ No Published Metric Dimensions For This Product

SELECTION/DIMENSIONS

Sleeve Bearings - Bronze-Bushed

1-15/16" THRU 8" ANGLE BRONZE-BUSHED PILLOW BLOCKS

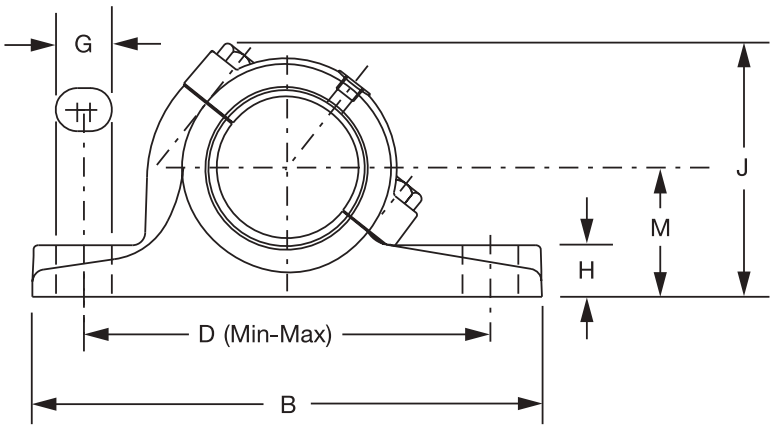

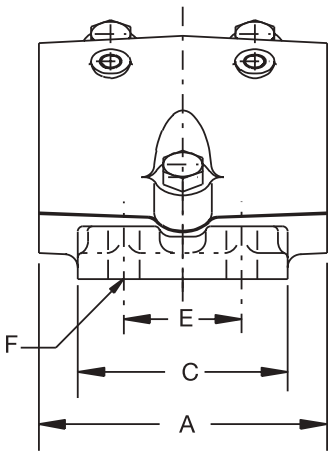

Shaft	Part No.	Description	Wt.	Used on Frame	A	B	C	D	
								Min.	Max.
1-15/16	**231063**	P4B-BZA-115	10	HD-200	4	8-1/4	3-1/2	6-5/16	6-11/16
2-3/16	**231069**	P4B-BZA-203	14	HD-200	4-1/2	8-1/2	3-1/2	6-9/16	6-15/16
2-7/16	**231075**	P4B-BZA-207	20	HD-200	5	10-1/4	4	7-11/16	8-5/16
2-11/16	**231081**	P4B-BZA-211	22	HD-250	5-1/2	10-1/2	4-1/4	7-15/16	8-9/16
2-15/16	**231087**	P4B-BZA-215	28	HD-250	6	11	4-1/2	8-7/16	9-1/16
3-7/16	**231096**	P4B-BZA-307	46	HD-300	7	13	5	10-1/16	10-15/16
3-15/16	**231102**	P4B-BZA-315	62	HD-350	8	14-3/4	5-1/2	11-7/16	12-9/16
4-7/16	**231108**	P4B-BZA-407	85	HD-400	9	16-9/16	6-5/16	12-15/16	14-1/16
4-15/16	**231114**	P4B-BZA-415	109	HD-400	10	18	7	14-5/16	15-11/16
5-7/16	**231120**	P4B-BZA-507	142	HD-500	11	19-3/4	8	15-1/16	16-7/16
5-15/16	**231126**	P4B-BZA-515	180	HD-500	12	20-1/2	8-1/2	15-13/16	17-3/16
6-1/2	**231135**	P4B-BZA-608	220	...	13	22	9-5/8	17-3/16	18-13/16
7	**231141**	P4B-BZA-700	275	...	14	23	10	18-1/4	19-3/4
8	**231150**	P4B-BZA-800	400	...	16	26	11	20-11/16	22-5/16

♦ No Published Metric Dimensions For This Product



Sleeve Bearings - Bronze-Bushed

1-15/16" THRU 8" ANGLE BRONZE-BUSHED PILLOW BLOCKS

Shaft	E	F Bolt	G	H	J	M	Cap Bolts Quantity	Grease Cups #		
								Pipe Tap	Qty.	Size
1-15/16	1-3/4	1/2	3/4	7/8	4-11/16	2-1/4	2	1/4	1	1
2-3/16	1-3/4	1/2	3/4	1	5-1/8	2-1/2	2	3/8	1	2
2-7/16	2	5/8	1	1-1/8	5-9/16	2-3/4	2	3/8	1	2
2-11/16	2-1/4	5/8	1	1-1/4	5-7/8	3	2	3/8	1	2
2-15/16	2-1/2	5/8	1	1-3/8	6-3/8	3-1/4	2	3/8	1	2
3-7/16	2-3/4	3/4	1-1/4	1-1/2	7-1/8	3-1/2	2	1/2	1	3
3-15/16	3	3/4	1-3/8	1-5/8	7-1/2	3-3/4	3	1/2	1	4
4-7/16	3-1/2	7/8	1-1/2	1-3/4	8-1/2	4-1/8	3	1/2	1	4
4-15/16	4	7/8	1-5/8	1-7/8	9-3/16	4-1/2	3	1/2	1	4
5-7/16	4-1/2	1	1-7/8	2	10-1/4	5	3	1/2	2	3
5-15/16	5	1-1/8	1-7/8	2-3/16	11-1/16	5-1/2	3	1/2	2	3
6-1/2	5-1/2	1-1/8	2	2-1/4	12-1/8	6	4	1/2	2	4
7	6	1-1/4	2	2-3/8	13	6-1/2	4	1/2	2	4
8	6-3/4	1-3/8	2-1/4	2-1/2	14-1/16	7	4	1/2	2	4

Grease cups or pressure fittings may be obtained thru our distributors; one required per pillows block up thru 4-15/16" sizes and two required for balance of sizes.

See page B13-10 for grease fitting and reducer bushing part number.

Note: 1-15/16 - 3-7/16" sizes have 2 cap bolts

3-15/16 - 5-15/16" sizes have 3 cap bolt (shown in diagram)

6-1/2" and larger have 4 cap bolts

SELECTION



Sleeve Bearings - BRONZOIL

RADIAL LOAD RATINGS FOR BRONZOIL SLEEVE BEARINGS

Shaft Sizes	Radial Load Rating in Lbs. at Various Revolutions Per Minute					
	50	100	200	500	1000	1500
1/2	230	225	220	175	120	110
5/8	250	240	230	180	125	105
3/4	260	250	240	185	130	100
7/8	280	270	260	190	145	95
15/16	380	360	290	200	150	90
1	420	400	300	210	160	85
1-3/16	500	475	395	250	135	115
1-1/4	525	500	415	260	140	120

Shaft Sizes	Radial Load Rating in Lbs. at Various Revolutions Per Minute				
	2000	2500	3000	3500	4000
1/2	90	80	60	50	45
5/8	80	65	55	45	35
3/4	70	55	50	35	...
7/8	60	50	45	...	...
15/16	55	45	40	...	...
1	50	40	...	...	...
1-3/16	60	...	...	...	...
1-1/4	63	...	...	...	...

BRONZOIL Take-Up Bearing Assembly

Size	(TUBO--) Assy.No.	1	2	3	4
1/2	**034030**	034001	405046	034013	444010
5/8	**034031**	034001	405046	034014	444010
3/4	**034032**	034001	405046	034015	444010
7/8	**034033**	034002	405046	034016	444010
15/16	**034034**	034002	405046	034017	444010
1	**034035**	034002	405046	034018	444010

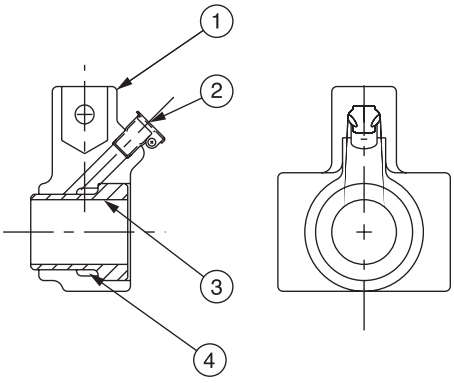

1. BRONZOIL Housing
2. BRONZOIL Take-Up Oil Cup
3. BRONZOIL Bushing
4. BRONZOIL Permawick



Select a bearing from the rating tables having a radial load equal to or greater than the actual load providing normal operating conditions are met. If these conditions cannot be met, select a bearing for an equivalent radial load to be obtained by multiplying the actual radial load by a 2.0 to 4.0 service factor - depending on specific application.

Normal Operating Conditions:

1. Adequate oil supply.
2. Proper bearing alignment for uniform distribution of load at all operating conditions.
3. No shock loading.
4. No adversely high operating conditions.
5. No moist, corrosive, or abrasive atmosphere.
6. Shaft surface finish must be equal to that of commercial steel shafting. (About 32 micro inches)
7. Shaft diameter tolerance within +.000/ -.002.
8. Maximum operating temperature 180°F.



Sleeve Bearings - BRONZOIL

1/2" THRU 1-1/4" BRONZOIL PILLOW BLOCKS

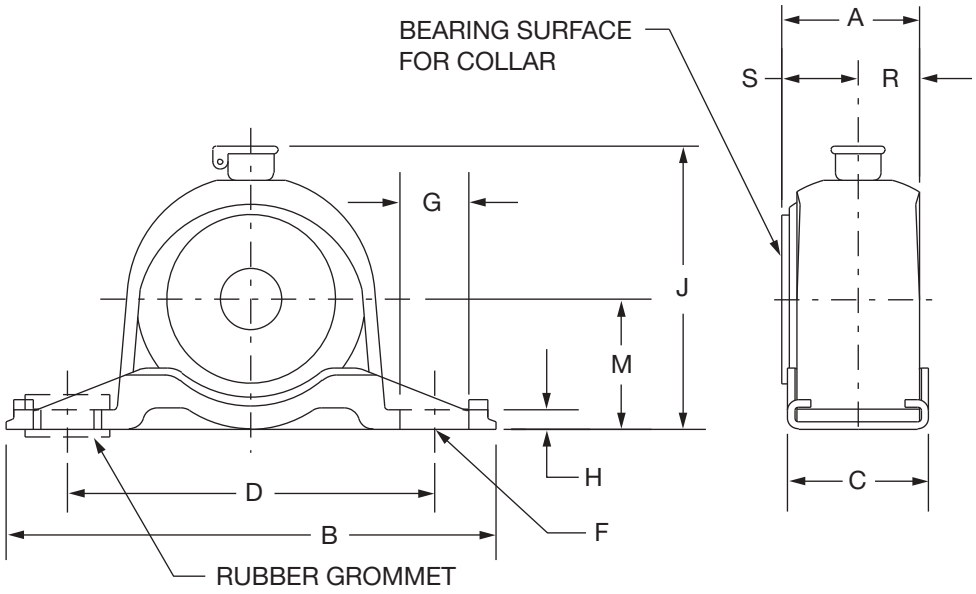

Shaft Size	Part No.	Description	Wt.	A	B	C	D
1/2	**035025**	P2B-BO-008					
5/8	**035026**	P2B-BO-010	0.6	1-1/8	4	1-3/16	3
3/4	**035027**	P2B-BO-012					
7/8	**035028**	P2B-BO-014					
15/16	**035029**	P2B-BO-015	0.5	1-1/8	4	1-3/16	3
1	**035030**	P2B-BO-100					
1-3/16	**035107**	P2B-BO-103	1.3	1-3/4	4-1/2	1-1/4	3-1/2
1-1/4	**035108**	P2B-BO-104	1.2	1-3/4	4-1/2	1-1/4	3-1/2

Shaft Size	F Bolt	G	H	J	M	R	S
1/2							
5/8	3/8	9/16	5/32	2- 5/16	1-1/16	1/2	5/8
3/4							
7/8							
15/16	3/8	9/16	5/32	2-5/16	1-1/16	1/2	5/8
1							
1-3/16	3/8	9/16	5/32	2-13/16	1-5/16	7/8	7/8
1-1/4	3/8	9/16	5/32	2-13/16	1-5/16	27/32	29/32

Grommets are optional and furnished on order only. Order (2) grommet long nipples (part number 035082) for each pillow block

When grommets are used, the J and M dimensions increase by 1/16" and the H dimension by 1/8". A 5/16" bolt and a washer must be used with each grommet. Washer part number 035084.

♦ No Published Metric Dimensions For This Product

FEATURES/BENEFITS PAGE B17-2	SPECIFICATION/HOW TO ORDER PAGE B17-4	NOMENCLATURE PAGE B17-5	SELECTION PAGE B17-6

SELECTION/DIMENSIONS

Sleeve Bearings - BRONZOIL

1/2" THRU 1-1/4" BRONZOIL 4-BOLT FLANGE BEARING

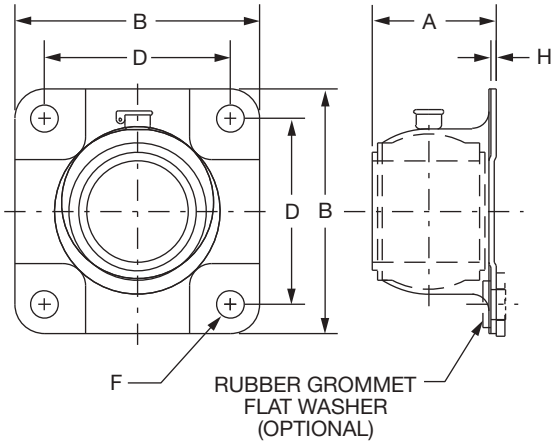

STYLE A

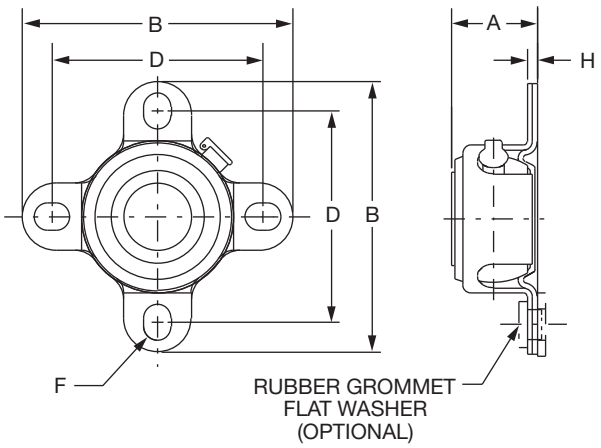

STYLE B

Shaft Size	Part No.	Description	Wt.	A	B
1/2	**035031**	F4B-BO-008			
5/8	**035032**	F4B-BO-010	0.60	1-1/4	4
3/4	**035033**	F4B-BO-012			
7/8	**035034**	F4B-BO-014			
15/16	**035035**	F4B-BO-013	0.50	1-1/4	4
1	**035036**	F4B-BO-100			
1-3/16	**035116**	F4B-BO-103	1.30	1-7/8	3-5/8
1-1/4	**035117**	F4B-BO-104	1.20	1-29/32	3-5/8

Shaft Size	D	F Bolt	H	STYLE
1/2				
5/8	3-1/8	3/8	5/32	B
3/4				
7/8				
15/16	3-1/8	3/8	5/32	B
1				
1-3/16	2-3/4	3/8	1/16	A
1-1/4	2-3/4	3/8	1/16	A

Grommets are optional and furnished on order only. Order (4) grommet short nipples (part number **035083**) for each flange bearing.

When grommets are used, the A dimension increases by 1/16" and the H dimension by 1/8". A 5/16" bolt and a washer must be used with each grommet. Washer part number 035084.

♦ No Published Metric Dimensions For This Product

DODGE



Shaft Collars

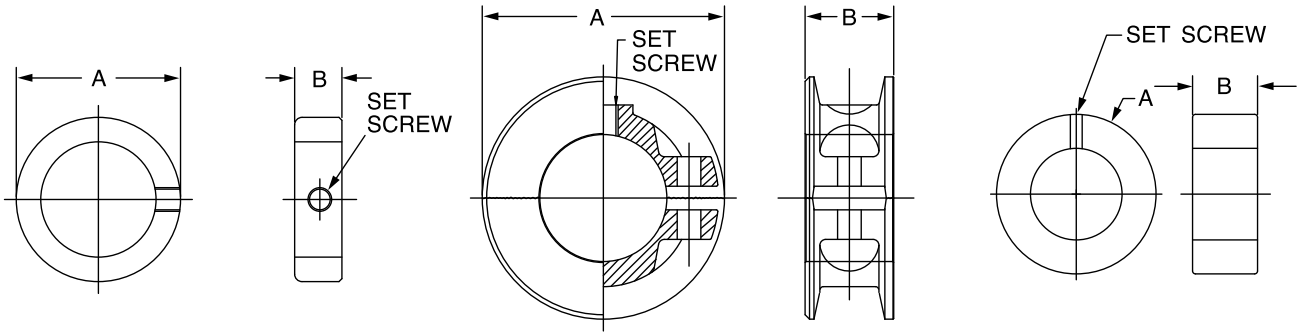

Solid Steel							Solid Iron					Split Iron				
Shaft Size	Part Number *		Dimensions				Shaft Size	Part Number	Dimensions			Shaft Size	Part Number	Dimensions		
	Steel	Stainless	O.D. (A)	Width (B)	Screw	Wt.			O.D. (A)	Width (B)	Wt.			O.D. (A)	Width (B)	Wt.
1/8	-----	**456225**	0.36	0.25	#6	0.01	1-15/16	**010020**	3.38	1.38	2.5	1-1/8	**010075**	3.13	1.25	1.3
3/16	**040001**	**456226**	0.44	0.25	#8	0.01	2	**010021**	3.38	1.38	2.5	1-3/16	**010076**	3.13	1.25	1.3
1/4	**040002**	**456227**	0.50	0.28	#10	0.01	2-3/16	**010024**	3.75	1.38	3.0	1-1/4	**010077**	3.13	1.25	1.3
5/16	**040003**	**456228**	0.63	0.34	#10	0.01	2-7/16	**010028**	4.25	1.50	4.3	1-5/16	**010078**	3.38	1.44	1.8
3/8	**040004**	**456229**	0.75	0.38	1/4	0.01	2-1/2	**010029**	4.25	1.50	4.3	1-7/16	**010080**	3.38	1.44	1.8
7/16	**040005**	-----	0.88	0.44	1/4	0.05	2-11/16	**010032**	4.75	1.50	5.0	1-1/2	**010081**	3.38	1.44	1.8
1/2	**040006**	**456230**	1.00	0.44	1/4	0.1	2-15/16	**010036**	5.00	1.63	5.6	1-11/16	**010084**	3.75	1.56	2.4
9/16	**040007**	-----	1.00	0.44	1/4	0.1	3-3/16	**010039**	5.50	1.63	7.0	1-3/4	**010085**	3.75	1.56	2.4
5/8	**040008**	**456231**	1.13	0.50	5/16	0.1	3-7/16	**010043**	5.75	1.75	7.6	1-15/16	**010088**	4.06	1.75	2.6
11/16	**040009**	-----	1.25	0.56	5/16	0.1	3-15/16	**010048**	6.50	1.88	10.0	2	**010089**	4.06	1.75	2.6
3/4	**040010**	**456232**	1.25	0.56	5/16	0.1	4-7/16	**010051**	7.25	2.00	12.0	2-3/16	**010092**	4.50	1.88	3.4
13/16	**040011**	-----	1.31	0.56	5/16	0.1	4-15/16	**010054**	8.00	2.13	16.3	2-1/4	**010093**	4.50	1.88	3.4
7/8	**040012**	**456234**	1.50	0.56	5/16	0.2	5-7/16	**010055**	8.75	2.13	18.5	2-7/16	**010096**	4.44	1.88	3.8
15/16	**040013**	-----	1.63	0.56	5/16	0.2	5-15/16	**010056**	9.25	2.25	23.0	2-1/2	**010097**	4.88	2.00	4.3
1	**040014**	**456234**	1.63	0.63	5/16	0.2	6	**010057**	9.25	2.25	23.0	2-11/16	**010100**	5.31	2.06	5.4
1-1/16	**040015**	-----	1.75	0.63	5/16	0.2	6-1/2	**010058**	10.00	2.25	25.0	2-15/16	**010104**	5.50	1.88	4.6
1-1/8	**040016**	**456235**	1.75	0.63	5/16	0.2	7	**010059**	10.50	3.38	32.0	3	**010105**	5.50	1.88	4.4
1-3/16	**040017**	-----	2.00	0.69	3/8	0.4	7-1/2	**010060**	11.38	2.50	35.0	3-3/16	**010107**	6.06	2.38	8.0
1-1/4	**040018**	**456236**	2.00	0.69	3/8	0.4	8	**010061**	12.13	2.88	45.0	3-7/16	**010110**	6.06	2.38	6.0
1-5/16	**040019**	-----	2.13	0.69	3/8	0.4						3-11/16	**010112**	6.81	2.63	10.6
1-3/8	**040020**	-----	2.13	0.75	3/8	0.4						3-15/16	**010114**	7.00	2.75	9.0
1-7/16	**040021**	-----	2.25	0.75	3/8	0.5						4-7/16	**010117**	8.13	3.31	17.0
1-1/2	**040022**	**456237**	2.25	0.75	3/8	0.5						4-15/16	**010120**	8.50	3.25	20.8
1-9/16	**040023**	-----	2.50	0.81	3/8	0.7						5-7/16	**010123**	9.00	3.25	23.0
1-5/8	**040024**	-----	2.50	0.81	3/8	0.6						5-15/16	**010126**	9.50	3.25	23.7
1-11/16	**040025**	-----	2.50	0.81	3/8	0.6						6	**010127**	10.13	4.06	35.0
1-3/4	**040026**	**456238**	2.75	0.88	1/2	0.8						6-1/2	**010128**	11.00	4.25	41.0
1-7/8	**040027**	-----	2.75	0.88	1/2	0.8						7	**010129**	12.00	4.50	46.0
1-15/16	**040028**	-----	3.00	0.88	1/2	1.0						7-1/2	**010130**	12.94	4.69	56.0
2	**040029**	**456239**	3.00	0.88	1/2	1.0						8	**010131**	13.50	4.88	71.0
2-3/16	**040030**	-----	3.25	0.94	1/2	1.2										
2-1/4	**040031**	-----	3.25	0.94	1/2	1.2										
2-7/16	**040032**	-----	3.50	1.00	1/2	1.4										
2-1/2	**040033**	-----	3.50	1.00	1/2	1.3										
2-15/16	**040034**	-----	4.25	1.13	1/2	2.2										

NOTE: Solid and Split iron collars have one set screw thru 3-1/4" bore size. 3-3/16" and larger bores have two setscrews.

NOTE: **Steel is mild carbon steel.**
Stainless is 300-series stainless.
All sizes are fitted with one setscrew.

FEATURES/BENEFITS PAGE B17-2	SPECIFICATION/HOW TO ORDER PAGE B17-4	NOMENCLATURE PAGE B17-5	SELECTION PAGE B17-6

NOTES

CONTENTS

SLEEVOIL®

Features / Benefits
- R Series Pillow Block B18-4
- RTL Series Pillow Block B18-5

Specification/How To Order B18-7

Nomenclature B18-7

Selection B18-8

Selection/Dimensions
- R Series Pillow Block B18-10
- RTL Series Pillow Block B18-18
- RXT Series Pillow Block B18-20

Modifications/Accessories
- End Cap Kits. B18-22
- Auxiliary Seal Kits B18-23
- RTL Replacement Part Kits B18-24
- R Series Replacement Part Kits B18-25
- Heater/Thermostat B18-26
- Trapezoidal Oil Ring (R Series - RTL) B18-27
- Trapezoidal Oil Ring (RXT) B18-28

Vibration Detector Adapter Kit B18-29

Oil Level And Filtration System B18-30

Bearing Isolator B18-31

Part Number Index INDEX-1

Key Word Index KEYWORD-1

CONTENTS



FEATURES/BENEFITS



GENERAL OPERATING CHARACTERISTICS

Though originally designed for the exacting requirements of the air handling industry, R Series SLEEVOIL pillow blocks are suitable for a wide range of industrial applications where a precision built, split, babbitted, ring-oiled bearing is required which is self aligning and quiet in operation.

SLEEVOIL pillow blocks have good cooling capabilities. Water cooled (WC) and externally cooled (XC) types operate at higher speeds and load ranges than plain units and function well near high temperature sources.

For standard SLEEVOIL bearings, the shaft tolerance is +0.000" / -0.002" with a surface finish of 32 micro-inches or better.

WHERE SLEEVOIL BEARINGS ARE CURRENTLY USED

- Fans & Blowers
- Generators
- Test Stands
- Pumps
- Motors
- Dynamometers
- Compressors
- Turbines

FEATURES AND BENEFITS SLEEVOIL

- **Fully split** housing for trouble-free assembly and disassembly
- **Rugged construction** using gray iron housing and liner for durability
- **Babbitt lining** offers conformability and shaft protection
- **Completely self-aligning** as a result of ball and socket mounting between liner and base
- **Dependable oil ring lubrication** with self-contained oil supply
- **Convenient oil gage** can be positioned on either side of housing
- **Proven reliability** and dependable performance guard against catastrophic failures.
- **Extended life** is a plus with no metal-to-metal contact during operation. More than ten times the theoretical life of anti-friction bearings
- **High speed capabilities** because of self-pressurized full oil film
- **Adequate vibration dampening** is handled by the hydrodynamic oil film which absorbs shock
- **Effective heat transfer** accomplished by journal surrounded by improved coolant chambers
- **Quiet operation** accomplished by full separation of mating parts

FEATURES/BENEFITS

SLEEVOIL

R Series Pillow Block

- 1-7/16” size is stocked as a Plain pillow block
- 1-11/16” - 3-7/16” sizes are stocked as Plain/Water cooled (PLWC) pillow block
- 3-15/16” - 8” sizes are stocked as Plain/Externally Cooled (PLXC) pillow blocks (standard and short series)
- PLXC Liner Only

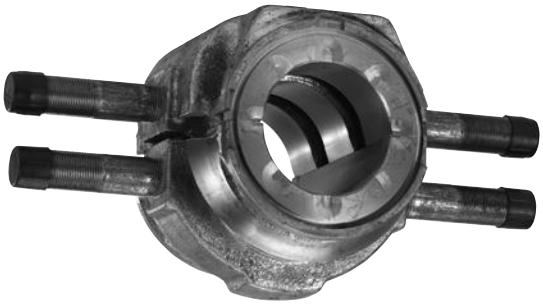

PLXC Liner Assembly
(Plain/Externally Cooled)



PLWC Pillow Block
(Plain/Water Cooled)



STL (Standard)



SSL (Short Series)

NOTE:
Water Cooled Replacement Liners (WC Repl) are also available for housings made prior to 1973 with smaller coolant pipes.



SLEEVOIL
R Series Pillow Block

- 9” - 14” sizes



Plain Pillow Block



XC Pillow Block

SLEEVOIL
R Series Pillow Block

- All R series jacketed liners designated as XC can be air, oil, or water cooled.
- Thrust collars convert the expansion bearing into a non-expansion bearing.
- Short series housings require less shaft space and are for expansion bearings only.
- 3-7/16, and larger bore housings are pre-machined for thermocouples, heaters, thermostats, vibration detector adapter kits, auxiliary seal kits, end cap kits and circulating oil kits.
- 3-15/16 - 8, water cooled replacement (WC repl) liners fit in the R series housings. WC repl liners have small pipes.
- PLXC Liners will not fit in old WC housings (prior to 1973); R Series housing is required.

SLEEVOIL
RTL Series Pillow Block
3-7/16” - 12” Sizes



RTL Series Pillow Block

General Operating Characteristics

RTL pillow block blocks offer excellent radial and thrust load capacities. Large coolant chambers provide especially effective heat dissipation when used with circulating coolant systems. This provides exceptionally strong bearing performance near high heat sources or gases.

The inner liner of the RTL has a center cavity which provides flooding lubrication to the thrust plates. This cavity acts as a reservoir to provide lubrication even during start-up and divides the radial area into two individual load sections. A single thrust collar is required. If a split collar is used, a shaft recess is necessary.

Coolant chambers, which cool both the thrust plates and radial load sections, are of sufficient size to allow the use of water, air, or oil as the internal coolant.

Expansion pillow blocks are furnished as standard. When non-expansion blocks are specified, a thrust collar and thrust plate kit are required.

- Reliable high speed operation.
- Three times the thrust load capability of the R series.
- Suitable for operation near high heat sources.
- Pre-machined for thermocouples, circulating oil kit, vibration detector adapter kit, auxiliary seal kits, end cap kit, heater and thermostat.

FEATURES/BENEFITS

Dodge SLEEVOIL Bearing Isolator
RTL AND R-SERIES PILLOW BLOCKS



The Dodge SLEEVOIL bearing isolator is a fully split multi-labyrinth contact sealing system. The stator forms a complex labyrinth with the rotor to isolate the bearing from contamination keeping the lubricating oil clean. The tortuous labyrinth path between the stator and rotor also contains internal non-metallic seals to limit direct penetration of liquid or particulate.

The SLEEVOIL isolator is IP56 rated and all seal components including rotor stator and o-rings are fully split for ease of assembly and disassembly.

O-rings in the bore of the rotor provide sealing along the shaft and allow for axial shaft expansion as needed.

The isolator seal is designed to retrofit an existing SLEEVOIL housing with dovetail grooves on either end.



① Setscrew provides additional clamping to the housing

② Seal Stator

③ Housing O-ring Seals

④ Rotor Locating Seals

⑤ Shaft O-ring Seals

⑥ Seal Rotor

⑦ Expulsion port expels contaminants from seals



SLEEVOIL - NOMENCLATURE

SLEEVOIL BEARING NOMENCLATURE - R & RTL SERIES:

STD	Standard Series
PLWC	Plain/Water Cooled
SSL	Short Series Loaded
STL	Standard Series Loaded
RTL	Radial Thrust Loaded
PL	Plain
PLXC	Plain/Externally Cooled
SSH	Short Series
XC	Externally Cooled

PB	Pillow Block
HSG	Housing
LNR	Liner Assembly
TC	Thrust Collar
TPK	Thrust Plate Kit
BTP	Bronze Thrust Plates
	(BTP1-Type 1 Lower Liner Only;
	BTP2-Type 2 Upper & Lower Liner)

The product offering has 6-digit part numbers with listing shown throughout this catalog. Use of part numbers ensures accurate order processing.

SELECTION





Dodge SLEEVOIL Application Inquiry Form

Company Name: _____ Date: _____
Address: _____ Response Required By: _____
Contact Name: _____ Phone (_____) _____
Customer Reference: _____ Fax: (_____) _____
Installation and Arrangement: _____

Bearing Size in Inches:

Shaft Speed: ☐ Constant _____ RPM
☐ Variable Speed - Max RPM _____ Min RPM _____
☐ Turning Gear _____

Type of Coolant:
☐ Plain (None) ☐ Water ☐ Air ☐ Plain - Circ Oil ☐ Water Cooled - Circ Oil

Preferred Lubricant: ☐ SAE10 ☐ SAE 20 ☐ SAE30 ☐ Other _____
☐ ISO 32 ☐ ISO 68 ☐ ISO 100

Expected Temperature:
Ambient Max _____ °F Min _____ °F Water Inlet Max _____ °F Min _____ °F
Air Inlet Max _____ °F Min _____ °F Oil Inlet Max _____ °F Min _____ °F
Air Velocity over Bearing Housing (FPM):

Fixed Bearing (Non-Expansion)
☐ RTL ☐ STL ☐ RXT
Loading: ☐ Base ☐ Cap

Fixed Bearing Radial Load: _____ Lbs
Fixed Bearing Thrust Load: _____ Lbs

Free Bearing (Expansion)
☐ RTL ☐ STL ☐ SSL ☐ RXT
☐ Base ☐ Cap

Free Bearing Radial Load: _____ Lbs.

Cooling Wheel: ☐ Yes ☐ No ☐ Yes ☐ No
External Heat Source (Fan Temperature): _____ °F
Closest Part of Bearing to Heat Source: Fixed Bearing _____ Inches Free Bearing _____ Inches

Direction of resultant load: Fixed Bearing ⊕ Free Bearing ⊕

Please state any unusual conditions such as shock loads changes in thrust loads, low speed requirements, hot shaft start-ups, enviornmental condtions (dust, chemicals gases etc:

Dodge / P.O. Box 499 / 6040 Ponders Ct. / Greenville, S.C. 29602 - 0499 / 864-297-4800

FEATURES/BENEFITS PAGE B18-3	EASY SELECTION PAGE B18-7	SELECTION/DIMENSIONS PAGE B18-10	ACCESSORIES PAGE B18-22



SLEEVOIL

Baldor Electric

P.O. Box 499 Greenville SC 29602 -0499 (864) 297-4800
SLEEVOIL Program Release 9.0.0 14: 32: 35 03/11/2001
SLEEVOIL Bearing Selection Program Serial No. Page 1

Filename: Sleeve Bearing Eng / Data Sheets / 2011 / GG110311. UNV

Customer Name	GG Fan
Attention	Dean King
Phone	(589) 258-2365
Email	dking@ggfan.com
Reference	Copper Power ID Fan

Selection 1 of 4 Comment:

①	②	③			
3.4375 inch SLEEVOIL RTL	Oil Ring Lubrication	Non-Expansion Bearing			④
Shaft speed		1780.0	RPM	1603.1 FPM	
Radial load		1771.0	Lbs.	95.9 PSI	
Thrust load		1596.0	Lbs.	177.3 PSI	
Ambient temperature		100.0	Deg F		
External heat gases with cooling wheel		752.0	Deg F		
External heat source to bearing face		6.0	Inches		
Average horizontal clearance		0.01350	Inches STD		
Average vertical clearance		0.00600	Inches STD		

⑤ > > > > > > > > > Application satisfactory with ISO VG 68 < < < < < < < < <
Calculations based on base loading
With water cooling at 100.0 Deg F and 2.00 GPM.

⑥				
Heat generation	Total	3.860	HP	9827.6 BTU / HR
Radial		0.657	HP	
Thrust		2.460	HP	
Heat gases		0.743	HP	
Heat dissipation by water cooling		3.226	HP	8214.9 BTU / HR
Heat dissipation by cooling wheel		0.365	HP	930.4 BTU / HR
Maximum operating temperature		165.0	Deg F	
Radial bearing film thickness		1.54	Mils	
Thrust bearing film thickness		0.72	Mils	
Attitude angle		44.1	Deg	

⑦ Dynamic coefficients (X=horizontal direction, Y=vertical direction)

KXX =	361864.3 LB / IN	CXX =	1894.2 LB-S / IN
KXY =	95775.3 LB / IN	CXY =	-1332.8 LB-S / IN
KYX =	-1025270.0 LB / IN	CYX =	-1332.8 LB-S / IN
KYY =	19400013.0 LB / IN	CYY =	12178.8 LB-S / IN

RIGID ROTOR INSTABILITY THRESHOLD IS UNBOUNDED

Sample Selection

1. Bore size and name of SLEEVOIL bearing.
2. Method of lubrication.
3. States whether bearing is non-expansion or expansion
4. Application input data
5. Acceptance of performance per input
6. Performance output data
7. Oil film dynamic coefficients

SELECTION/DIMENSIONS



SLEEVOIL - R Series

1-7/16" THRU 3-7/16" PLAIN-WATER COOLED STANDARD AND SHORT SERIES SLEEVOIL PILLOW BLOCKS

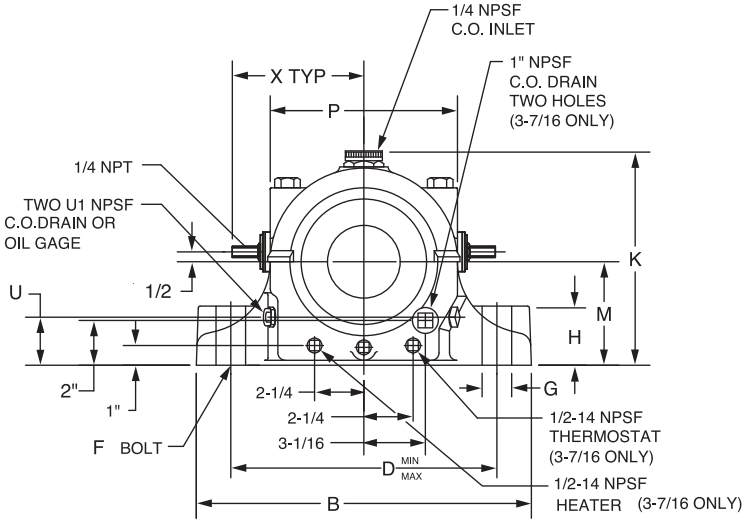

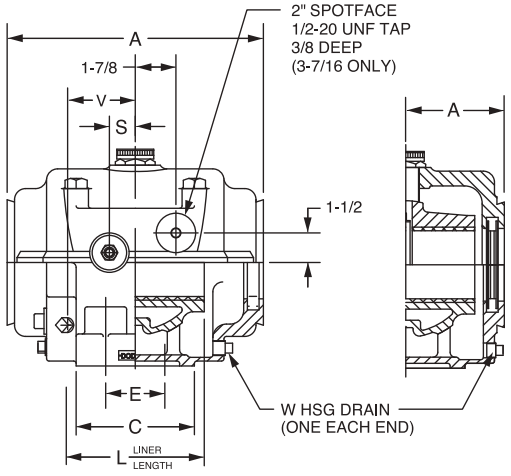

STANDARD SERIES SHORT SERIES

Shaft Size	Expansion Pillow Blocks STD		Expansion Pillow Blocks SSH (Short Series Expansion Only)		Split Thrust Collar 2 Collars Required To Make A Non-Expansion Pillow Blocks		Neoprene End Closure **		Hose Kits		Replacement PL-WC Liner Assemblies	
	Part No.	Wt.	Part No.	Wt.	Part No.	Wt.	Part No.	Wt.	Part No.	Wt.	Part No.	Wt.
1-7/16	**132983**	20.5	**....**	....	**133245**	0.7	**133980**	.12			**133203**	3.6
1-11/16	**132984**	30.7	**....**	....	**133250**	1.2	**133981**	.12			**133583**	6.3
1-15/16	**132985**	31.6	**....**	....	**133255**	1.0	**133982**	.12			**133584**	7.0
2-3/16	**132986**	47.8	**....**	....	**133260**	1.8	**133983**	.12			**133585**	12.0
2-7/16	**132987**	65.5	**....**	....	**133265**	2.7	**133984**	.12	**133344**	0.5	**133586**	11.6
2-11/16	**132988** ⊗	97.0	**....**	....	**133270**	4.1	**133985**	.12			**132959**⊗	27.0
2-15/16	**132989** ⊗	92.4	**132991**⊗	90.0	**133275**	3.8	**133986**	.18			**132950**⊗	22.0
	STL		**SSL**									
3-7/16	**132990** ⊗	144.0	**132992**⊗	138.0	**133280**	6.2	**133987**	0.31			**132951**⊗	50

FEATURES/BENEFITS PAGE B18-3 | HOW TO ORDER/NOMENCLATURE PAGE B18-7 | SELECTION PAGE B18-8 | ACCESSORIES PAGE B18-22



SLEEVOIL - R Series

1-7/16" THRU 3-7/16" PLAIN-WATER COOLED STANDARD AND SHORT SERIES SLEEVOIL PILLOW BLOCKS

Shaft Size	A		B		C		D (Min.-Max.)						E		F Bolt Dia.		G	
	STD	SSH	STD	SSH	STD	SSH	STD			SSH			STD	SSH	STD	SSH	STD	SSH
1-7/16	6-1/2	....	9-1/2	....	2-3/4	....	7	-	7-1/2	....	-	....	##	....	5/8	....	1	....
1-11/16	7-3/4	....	10-1/2	....	3	....	7-3/4	-	8-1/4	....	-	....	##	....	5/8	....	1	....
1-15/16	7-3/4	....	10-1/2	....	3	....	7-3/4	-	8-1/4	....	-	....	##	....	5/8	....	1	....
2-3/16	9-1/4	....	12-1/2	....	3-1/2	....	9-1/8	-	9-7/8	....	-	....	##	....	3/4	....	1-1/4	....
2-7/16	10-1/2	....	13-1/2	....	4	....	10-1/8	-	10-7/8	....	-	....	##	....	3/4	....	1-1/4	....
2-11/16	11-1/2	....	15	....	4-1/2	....	11	-	12	....	-	....	##	....	7/8	....	1-1/2	....
2-15/16	11-1/2	8-3/4	15	15	4-1/2	5-3/4	11	-	12	10-7/8	-	12-1/8	##	2-3/4	7/8	3/4	1-1/2	1-1/2
	STL	SSL	STL	SSL	STL	SSL	STL			SSL			STL	SSL	STL	SSL	STL	SSL
3-7/16	13	10	17	17	6	6	12-15/16-14-1/16			12-15/16-14-1/16			3	3	3/4	3/4	1-1/2	1-1/2

Shaft Size	H		K		L		M		P		S		U	
	STD	SSH	STD	SSH	STD	SSH	STD	SSH	STD	SSH	STD	SSH	STD	SSH
1-7/16	1-1/2	....	6	....	3	....	2-3/4	....	4-5/8	....	....	....	1-1/8	....
1-11/16	1-3/4	....	6-3/4	....	3-1/2	....	3-1/8	....	5-3/8	....	7/8	....	1-3/8	....
1-15/16	1-3/4	....	6-3/4	....	4	....	3-1/8	....	5-3/8	....	7/8	....	1-3/8	....
2-3/16	2	....	8	....	4-1/2	....	3-3/4	....	6-3/8	....	7/8	....	1-1/2	....
2-7/16	2-3/8	....	8-3/4	....	5	....	4-1/8	....	7-1/8	....	1-1/16	....	1-5/8	....
2-11/16	2-15/32	....	9-5/8	....	5-1/2	....	4-9/16	....	7-7/8	....	1-1/8	....	1-7/8	....
2-15/16	2-15/32	1-1/2	9-5/8	9-5/8	6	6	4-9/16	4-9/16	7-7/8	7-7/8	1-1/8	1-1/8	1-7/8	1-3/4
	STL	SSL	STL	SSL	STL	SSL	STL	SSL	STL	SSL	STL	SSL	STL	SSL
3-7/16	3	3	11	11	7	7	5-1/4	5-1/4	9-3/8	9-3/8	1-5/16	1-5/16	2	2

Shaft Size	U1		V		W		X
	STD	SSH	STD	SSH	STD	SSH	
1-7/16	1/2	....	2-1/16	....	1/4	....	....
1-11/16	1/2	....	2-1/4	....	1/4	....	3-3/4
1-15/16	1/2	....	2-1/4	....	1/4	....	3-3/4
2-3/16	1/2	....	2-1/2	....	1/4	....	4-3/4
2-7/16	1/2	....	2-15/16	....	1/4	....	4-3/4
2-11/16	1/2	....	3-1/8	....	1/4	....	5-1/8
2-15/16	1/2	1/2	3-1/8	3-9/16	1/4	1/4	5-1/8
	STL	SSL	STL	SSL	STL	SSL	
3-7/16	3/4	1/2	3-7/8	3-7/8	1/2	1/2	5-1/2

2-bolt base

3-7/16 Heater (**434719**)

** Used to close one end of pillow block. One required for sizes 1-7/16 thru 2-15/16. Two required for 3-7/16.

⊗ Pillow block and liner are pre-drilled for thermocouple (2 places)

STL & SSL are pre-drilled for accessories: thermocouple, circulating oil, vibration detector, heater and thermostat

FEATURES/BENEFITS PAGE B18-3	HOW TO ORDER/NOMENCLATURE PAGE B18-7	SELECTION PAGE B18-8	ACCESSORIES PAGE B18-22

SELECTION/DIMENSIONS

SLEEVOIL - R Series

3-15/16" THRU 8" PLAIN / EXTERNALLY COOLED STANDARD AND SHORT SERIES SLEEVOIL PILLOW BLOCKS

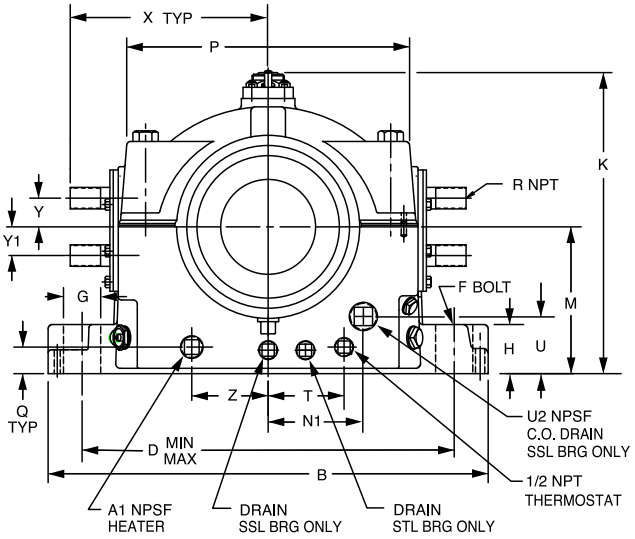

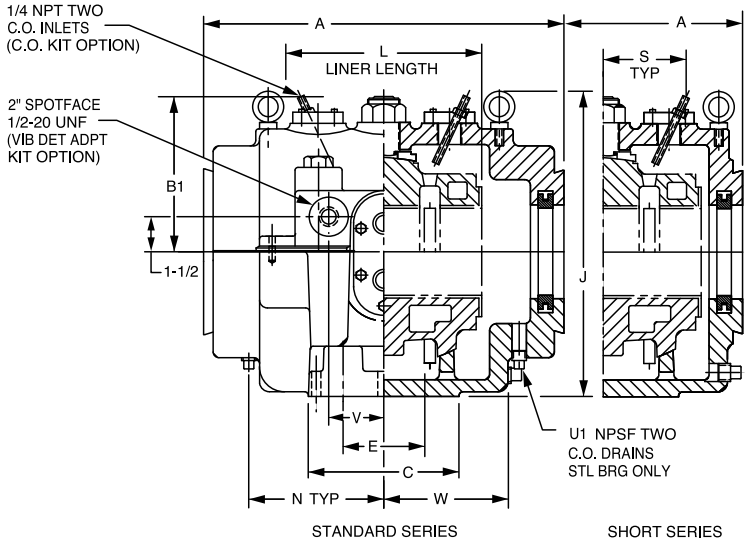

Shaft Size	Pillow Block Assemblies				Split Thrust Collars		Replacement Liner Assemblies ⊗			
	Expansion Pillow Blocks STL		Expansion Pillow Blocks SSL (Short Series Expansion Only)		2 Collars Required To Make A Non-Expansion STL Pillow Block		PL-XC Externally Cooled		WC (Prior to 1973 hsg) Replacement	
	Part No.	Wt.	Part No.	Wt.	Part No.	Wt.	Part No.	Wt.	Part No.	Wt.
3-15/16	**134200**	201	**134207**	193	**133285**	7.2	**132952**	51	**133590**	54
4-7/16	**134201**	271	**134208**	255	**133292**	7.9	**132953**	71	**133591**	65
4-15/16	**134202**	362	**134209**	324	**133293**	11.3	**132954**	92	**133592**	91
5-7/16	**134203**	470	**134210**	462	**133294**	12.3	**132955**	130	**133593**	114
6	**134204**	598	**134211**	570	**133295**	15.3	**132956**	158	**133594**	158
7	**134205**	882	**134212**	845	**133296**	31.3	**132957**	230	**133595**	216
8	**134206**	1298	**134213**	1256	**133297**	48.7	**132958**	372	**133596**	375

FEATURES/BENEFITS PAGE B18-3 | HOW TO ORDER/NOMENCLATURE PAGE B18-7 | SELECTION PAGE B18-8 | ACCESSORIES PAGE B18-22



SLEEVOIL - R Series

3-15/16" THRU 8" PLAIN / EXTERNALLY COOLED STANDARD AND SHORT SERIES SLEEVOIL PILLOW BLOCKS

Shaft Size	Optional Accessories										Pipe Grommet Kits >	
	Auxiliary Seal Kits ##		Housing End Cap Kits		Heater / Thermostat * 120 Volt		Circulating Oil Inlet Kits >		Neoprene End Closures ⊗⊗			
	Part No.	Wt.	Part No.	Wt.	Part No.	Wt.	Part No.	Wt.	Part No.	Wt.	Part No.	Wt.
3-15/16	**432181**	6.4	**432190**	6.1	**434721**	1.0	**432153**	2	**133988**	.3	**132192**	1.6
4-7/16	**432184**	7.0	**432193**	6.8	**434721**	1.0	**430198**	2	**133989**	.4	**132192**	1.6
4-15/16	**432187**	7.5	**432196**	7.3	**434721**	1.0	**430198**	2	**133990**	.5	**132193**	2.4
5-7/16	**133932**	12.4	**132546**	11.6	**434721**	2.0	**430155**	2	**133991**	.6	**132193**	2.4
6	**133933**	14.8	**132547**	10.6	**434725**	2.5	**430155**	2	**133992**	.8	**132198**	3.6
7	**133937**	19.0	**132548**	13.5	**434725**	2.5	**430155**	2	**133993**	1.2	**132198**	3.6
8	**133938**	24.9	**132549**	15.5	**434727**	3.0	**430155**	2	**133994**	1.3	**132198**	3.6

Shaft Size	A		B	C	D (Min.-Max.)	E	F Dia. Bolt	G	H		J	
	STL	SSL							STL	SSL	STL	SSL
3-15/16	15	11	19	7	14-1/4 - 15-3/4	3-1/2	7/8	1-3/4	3	2	12-1/16	12-5/8
4-7/16	16-1/2	12-1/2	20-1/2	7-1/2	15-1/4 - 16-3/4	4	1	2	3-1/2	3-1/2	14-5/8	14-5/8
4-15/16	18-1/4	13-3/4	22-1/2	8-1/2	16-5/8 - 18-7/8	4-1/2	1	**	3-1/8	2-1/2	15-7/8	15-7/8
5-7/16	19-3/4	15-1/4	24-1/2	9-1/2	18-1/4 - 20-1/4	5	1-1/8	2-1/4	3-3/4	2-3/4	17-1/8	17-1/8
6	21-1/4	16-1/4	26	10-1/2	19-5/8 - 21-7/8	5-1/2	1-1/4	2-1/2	4	3	17-5/8	18-1/2
7	24-1/2	18-3/4	29-3/4	12-1/2	22-5/8 - 25-3/8	6-1/2	1-1/2	3	5-1/8	3-1/2	19-7/16	21
8	27-3/4	21	34	14-1/2	25-5/8 - 28-7/8	7-1/2	1-3/4	3-1/2	5-7/8	4	21-5/16	23-1/2

Shaft Size	K	L	M	N	N1	P	Q	R Pipe		T		U	U1	U2
				STL	SSL			PLXC	WC Rep't	STL	SSL		STL	SSL
3-15/16	11-15/16	8	5-3/4	5-15/16	2-5/8	10-1/8	1-1/4	1	1/2	2-1/8	2-1/8	2-11/16	3/4	3/4
4-7/16	13-7/8	9	6-1/4	6-3/8	3-3/8	11-1/2	1-3/8	1	1/2	3	2	2-13/16	3/4	1
4-15/16	15-1/16	10	7	7-1/16	3-3/4	12-1/2	1-5/16	1-1/4	1/2	2-7/8	2	3-5/16	1	1-1/4
5-7/16	15-15/16	11	7-1/2	7-5/8	4-3/8	13-3/4	1-9/16	1-1/4	1/2	3-3/8	2-1/2	3	1	1-1/4
6	18	12	8-1/4	8-1/4	4-1/2	14-3/4	1-3/4	1-1/4	3/4	3-7/8	2-3/4	3-1/8	1	1-1/4
7	20-1/4	14	9-1/2	9-9/16	5	17	2	1-1/4	3/4	5	3	3-3/4	1-1/4	1-1/4
8	22-1/2	16	10-3/4	11	5-3/4	19	2	1-1/4	3/4	5-1/4	4	4-9/16	1-1/4	1-1/4

Shaft Size	V	W	X	Y		Y1		Z	A1	B1
				PLXC	WC Rep't	PLXC	WC Rep't			
3-15/16	3	5	8-9/16	1-1/4	1	1-1/4	1	2-1/8	3/4	7-1/16
4-7/16	3-1/2	5-5/8	9-3/16	1-1/4	1	1-1/4	1	3	3/4	7-5/8
4-15/16	3-1/2	6-1/8	10	1-1/2	1	1-3/4	1	2-7/8	3/4	8
5-7/16	3-1/2	6-3/4	10-3/8	1-1/2	1	1-3/4	1	3-3/8	3/4	8-3/4
6	4	7-1/4	11-3/16	1-3/4	1-1/4	2	1-1/4	3-7/8	1	9-7/8
7	4-1/2	8-3/8	12-15/16	1-3/4	1-1/4	2	1-1/4	5	1	10-7/8
8	5	9-5/8	14-13/16	1-3/4	1-1/4	2	1-1/4	5-1/4	1-1/4	12

One required per pillow block end

> One required per pillow block

* 220 volt heaters available. See Page B18-26.

** 2-1/4" on STL; 2" on SSL

⊗ To differentiate between XC and water cooled replacement liners see "R" dimensions (pipe size)

⊗ ⊗ Two required per 3-15/16 thru 4-15/16 sizes; three for 5-7/16 and larger All sizes are pre-machined for accessories: thermocouples, circulating oil, vibration detector, heater and thermostat

FEATURES/BENEFITS PAGE B18-3	HOW TO ORDER/NOMENCLATURE PAGE B18-7	SELECTION PAGE B18-8	ACCESSORIES PAGE B18-22

SELECTION/DIMENSIONS

SLEEVOIL - R Series

9", 10", 12" & 14" PLAIN SLEEVOIL PILLOW BLOCKS

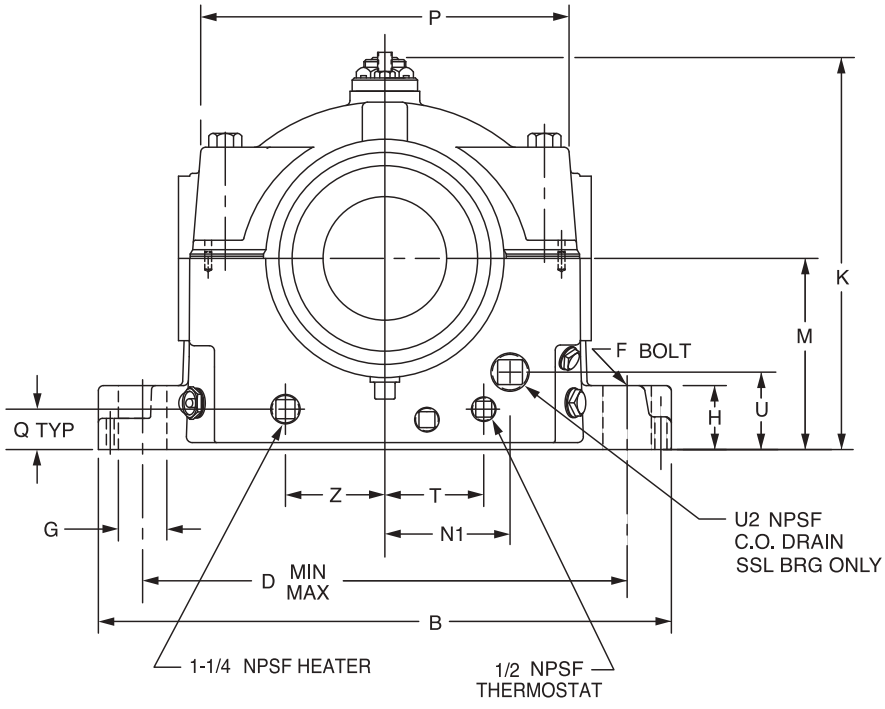

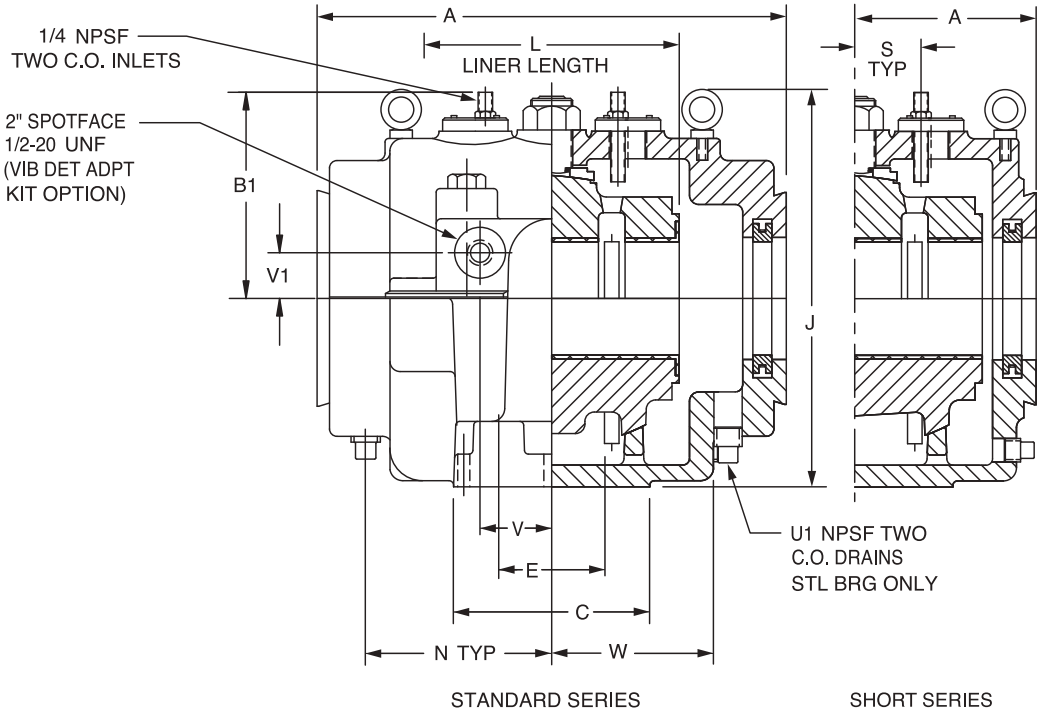

FEATURES/BENEFITS PAGE B18-3	HOW TO ORDER/NOMENCLATURE PAGE B18-7	SELECTION PAGE B18-8	ACCESSORIES PAGE B18-22

DODGE



SLEEVOIL - R Series

9", 10", 12" & 14" PLAIN SLEEVOIL PILLOW BLOCKS

Shaft Size	Plain Expansion Pillow Blocks				Split Thrust Collars	
	STL		SSL (Short Series Expansion Only)		2 Collars Required To Make A Non-Expansion STL Pillow Blocks	
	Part No.	Wt.	Part No.	Wt.	Part No.	Wt.
9	**132766**	1235	**132924**	1168	**133959**	54
10	**132767**	1240	**132925**	1105	**133960**	52
12	**132768**	2000	**132926**	1785	**133961**	68
14	**431399**	3400	**430561**	3000	**431389**	75

Shaft Size	Auxiliary Seal Kits ##		Housing End Cap Kits		Heater / Thermostat * 120 Volt		Circulating Oil Inlet Kits >		Neoprene End Closure##		Replacement Plain Liner Assemblies	
	Part No.	Wt.	Part No.	Wt.	Part No.	Wt.	Part No.	Wt.	Part No.	Wt.	Part No.	Wt.
9	**132814**	23.1	**132564**	15.9	**434727**	3.0	**430155**	2.0	**133996**	1.5	**133550**	327
10	**132816**	24.2	**132565**	16.4	**434727**	3.0	**430155**	2.0	**133995**	1.6	**133669**	450
12	**132819**	40.0	**132566**	25.0	**434729**	4.0	**430155**	2.0	**133997**	1.9	**133392**	650
14	**132822**	36.0	**132567**	25.0	**434729**	4.0	**430155**	2.0	**....**	....	**430831**	1200

Shaft Size	A		B	C	D (Min.-Max.)	E	F-Bolt	G	H		J	
	STL	SSL	STL & SSL	STL & SSL	STL &SSL	STL & SSL	STL & SSL	STL & SSL	STL	SSL	STL	SSL
9	27-3/4	21	34	14-1/2	25-5/8 - 28-7/8	7-1/2	1-3/4	3-1/2	5-7/8	4	22-3/8	23-1/2
10	27-3/4	21	34	14-1/2	25-5/8 - 28-7/8	7-1/2	1-3/4	3-1/2	5-7/8	4	22-3/8	23-1/2
12	30	23-1/4	40	17	31-1/4 - 34-3/4	9	2	4	6-3/4	6-3/4	29-5/16	29-5/16
14	34	26-1/4	46-1/8	18	36-1/2 - 40-1/2	10	2	4	7	...	35-1/8	35-1/8

Shaft Size	K	L	M	N	N1	P	S	T		U	U1	U2	V	Wt. (lbs.)	
	STL & SSL	STL & SSL	STL & SSL	STL	SSL	STL & SSL	STL & SSL	STL	SSL	SSL	STL		STL & SSL	STL	SSL
9	22-1/2	16	10-3/4	11	5-1/2	19	3	5-1/4	4	3-3/8	1-1/4	1-1/4	5	1235	1168
10	22-1/2	16	10-3/4	11	5-1/2	19	3	5-1/4	4	3-7/8	1-1/4	1-1/4	5	1240	1105
12	28-1/4	18	13-1/2	12-3/8	7-3/4	23-3/4	3-1/2	7	7	5-3/16	1-1/2	1-1/2	7	2000	1785
14	32-5/8	20	16	....	....	28-3/4	....	....	....	....	....	1-1/2	....	....	....

Shaft Size	V1		W	Z	B1
	STL	SSL	STL & SSL	STL & SSL	STL
9	1-1/2	1-1/2	9-5/8	5-1/4	12
10	1-1/2	1-1/2	9-5/8	5-1/4	12
12	2	2	11	7	14-1/2.
14	....	....	12-1/16	....	....

One required per pillow block end

> One required per pillow block

* 220 volt heaters available. See page B18-26.

All housings are pre-machined for accessories; thermocouples, circulating oil vibration detector, heater and thermostat

SELECTION/DIMENSIONS

SLEEVOIL - R Series

9", 10", 12" XC SLEEVOIL PILLOW BLOCKS

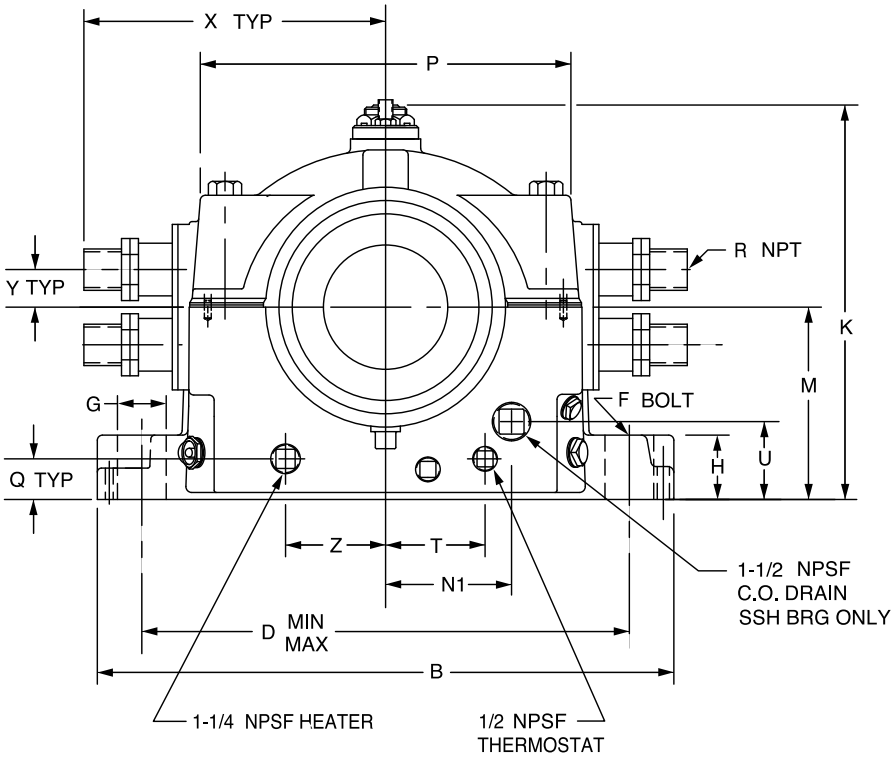

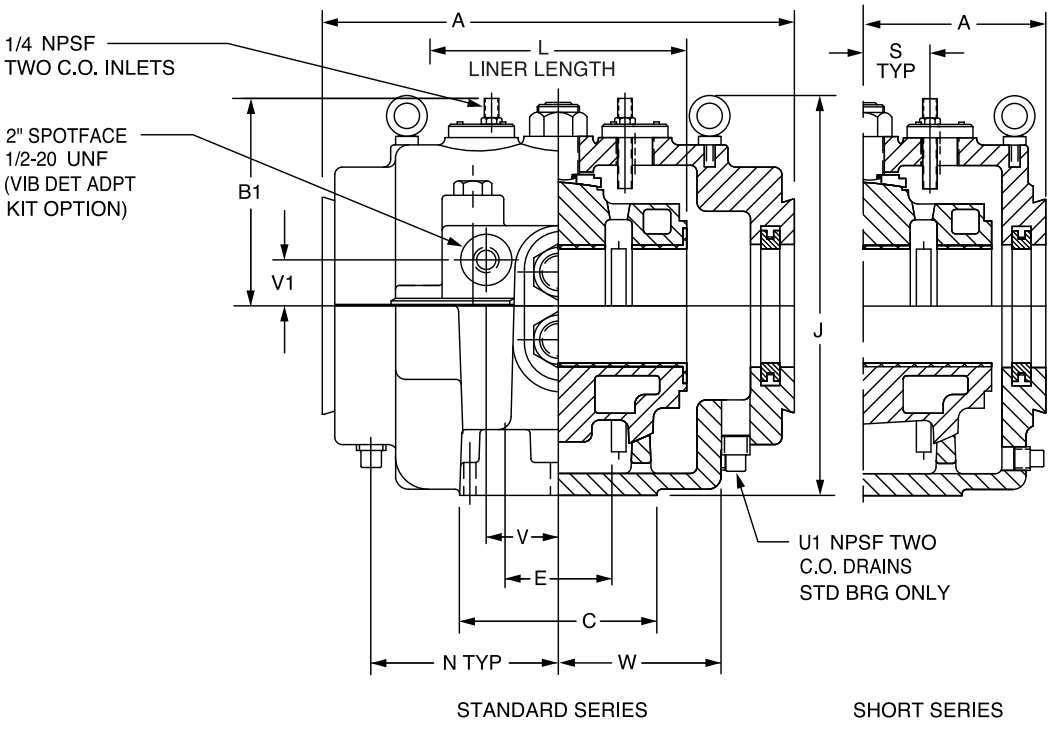

FEATURES/BENEFITS PAGE B18-3	HOW TO ORDER/NOMENCLATURE PAGE B18-7	SELECTION PAGE B18-8	ACCESSORIES PAGE B18-22

DODGE



SLEEVOIL - R Series

9", 10", 12" XC SLEEVOIL PILLOW BLOCKS

Shaft Size	Expansion Pillow Blocks XC (Externally Cooled) (Short Series Expansion Only)				2 Collars Required To Make A Non-Expansion STL Pillow Block	
	STL-XC		SSL-XC		XC Split Thrust Collars	
	Part No.	Wt.	Part No.	Wt.	Part No.	Wt.
9	**132538 ⊗**	1600	**133565 ⊗**	1500	**133303**	57
10	**132539 ⊗**	2000	**133566 ⊗**	1750	**133304**	74
12	**132559 x**	3300	**....**	....	**133305**	....

Shaft Size	Auxiliary Seal Kits ##		Housing End Cap Kits		Heater / Thermostat * XC 120 Volt		Circulating Oil Inlet Kits >		Neoprene End Closure ##		Liner Assemblies XC	
	Part No.	Wt.	Part No.	Wt.	Part No.	Wt.	Part No.	Wt.	Part No.	Wt.	Part No.	Wt.
9	**132814**	23.1	**132564**	15.9	**434729**	4.0	**430155**	2	**133996**	1.5	**132591**	300
10	**132816**	24.2	**132565**	16.4	**434729**	4.0	**430155**	2	**133995**	1.6	**132594**	400
12	**132819**	40.0	**132566**	25.0	**434729**	....	**....**	....	**133997**	1.9	**132597**	600

Shaft Size	A		B		C		D (Min.-Max.)		E	
	STL	SSL	STL	SSL	STL	SSL	STL	SSL	STL	SSL
9	29	22-1/4	37	37	15-1/2	15-1/2	28-3/8 - 31-5/8	28-3/8 - 31-5/8	8	8
10	30	23-1/4	40	40	17	17	31-1/4 - 34-3/4	31-1/4 - 34-3/4	9	9
12	34	...	46		18	...	36-5/8 - 40-3/8	....	10	....

Shaft Size	F-Bolt		G		H		J		K		L	M
	STL	SSL	STL	SSL	STL	SSL	STL	SSL	STL	SSL	XC	STL & SSL
9	1-3/4	1-3/4	3-1/2	3-1/2	6	6	26-13/16	26-3/4	25-1/2	25-1/2	17	12
10	2	2	4	4	6-3/4	6-3/4	29-5/16	29-1/4	28-1/4	28-1/4	18	13-1/2
12	2	....	4-1/8	....	7	7	34-3/4	29-5/16	33-1/16	....	20	16

Shaft Size	N	N1	P		Q	R Pipe	S	T	U	U1	V	V1
	STL	SSL	STL	SSL	STL & SSL	XC	STL & SSL	STL & SSL	SSL	STL	STL & SSL	STL & SSL
9	11-7/8	5-3/4	21-3/4	21-3/4	2-1/2	1-1/4	3-3/8	6-3/8	5-1/8	1-1/2	5	1-1/2
10	12-3/8	5-1/2	23-3/4	23-3/4	3	1-1/2	3-1/2	7	6-1/8	1-1/2	7	2
12	....	....	28-3/4	....	....	2	....	....	....	....	....	....

Shaft Size	W		X	Y	Z	B1	
	STL	SSL	XC	XC	STL & SSL	STL	SSL
9	10-5/8	10-5/8	16-1/4	2-1/4	6-3/8	13-5/8	13-5/8
10	11	11	17-1/2	2-5/8	7	14-1/2	14-1/2
12	12-1/16	....	20-1/4	....	....	....	....

One required per pillow block end

> One required per pillow block

⊗ All housings are pre-machined for accessories; thermocouples, circulating oil vibration detector, heater and thermostat

x Assembled-to-order, Not "L" version

* 220 volt heaters available. See page B18-26.

SELECTION/DIMENSIONS



SLEEVOIL - RTL Series

3-7/16" THRU 12" RTL SLEEVOIL PILLOW BLOCKS

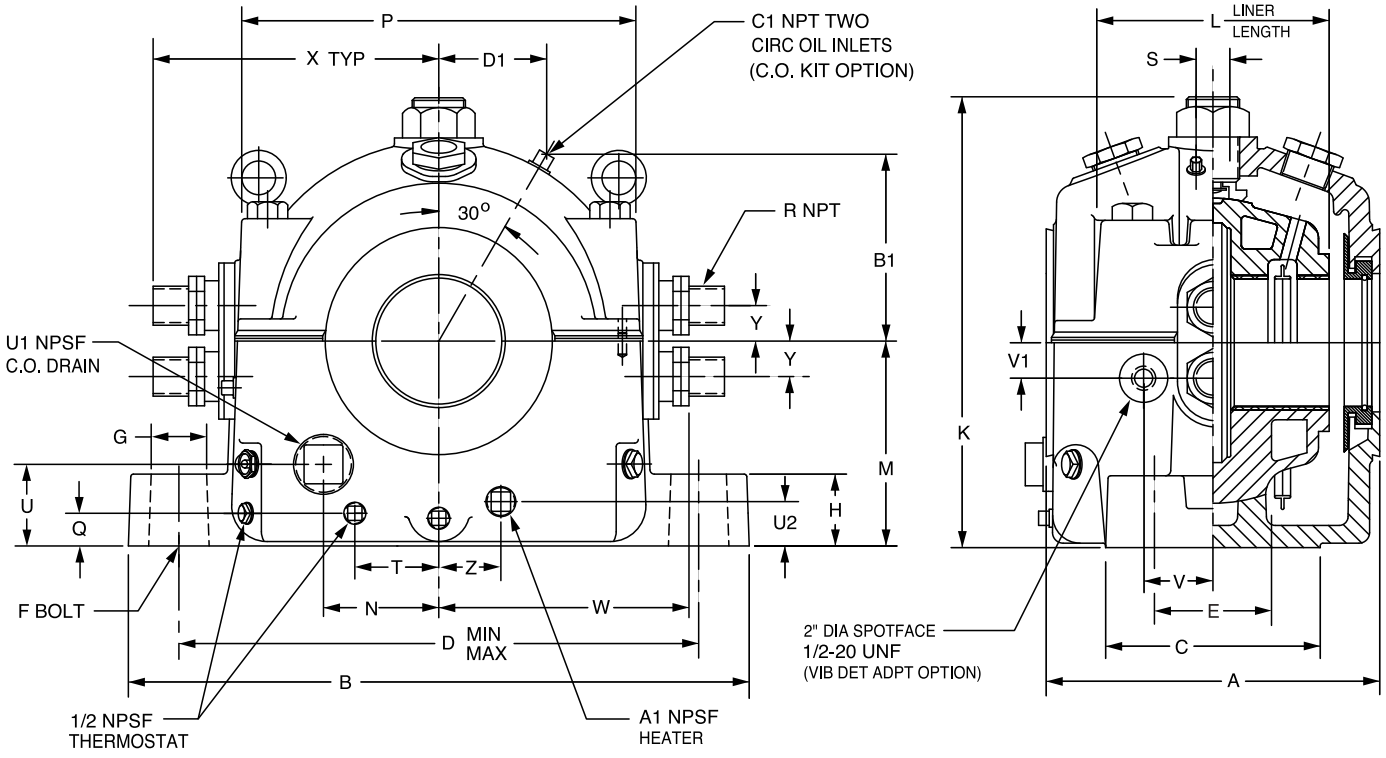

Shaft Size	Expansion Pillow Blocks		One of Each Required to Make a Non-Expansion Pillow Block				Auxiliary Seal Kits # #		Housing End Cap Kits		Heater / Thermostat *	
			Thrust Plate Kits		Split Thrust Collar ⊗⊗							
	Part No.	Wt.	Part No.	Wt.	Part No.	Wt.	Part No.	Wt.	Part No.	Wt.	Part No.	Wt.
3-7/16	**132474**	190	**137101**	2.5	**132151**	2.6	**132811**	4.9	**132542**	5.3	**434721**	1.0
3-15/16	**132475**	230	**137102**	4.3	**132152**	4.2	**432181**	6.4	**432190**	6.1	**434725**	2.5
4-7/16	**132476**	300	**137103**	5.4	**132153**	5.6	**432184**	7.0	**432193**	6.8	**434725**	2.5
4-15/16	**132477**	425	**137104**	6.9	**132154**	8.7	**432187**	7.5	**432196**	7.3	**434727**	3.0
5-7/16	**132383**	500	**137105**	10.2	**132155**	10.8	**133932**	12.4	**132546**	11.6	**434727**	3.0
6	**132384**	825	**137106**	12.7	**132156**	15.9	**133933**	14.8	**132547**	10.6	**434727**	3.0
7	**132385**	978	**137107**	17.6	**132157**	22.4	**133937**	19.0	**132548**	13.5	**434729**	4.0
8	**132386**	1310	**137108**	23.1	**132158**	34.5	**133938**	24.9	**132549**	15.5	**434729**	4.0
9	**132387**	1650	**137109**	42.6	**132159**	45.9	**132814**	23.1	**132564**	15.9	**434729**	4.0
10	**132388**	2150	**137110**	52.7	**132160**	59.8	**132816**	24.2	**132565**	16.4	**434729**	4.0
12	**132389**	3500	**137111**	74.1	**132161**	96.4	**132819**	40.0	**132566**	25.0	**434735**	7.5

* 220 volt heaters available. See page B18-26.

FEATURES/BENEFITS PAGE B18-3	HOW TO ORDER/NOMENCLATURE PAGE B18-7	SELECTION PAGE B18-8	ACCESSORIES PAGE B18-22



SLEEVOIL - RTL Series

3-7/16" THRU 12" RTL SLEEVOIL PILLOW BLOCKS

Shaft Size	Circulating Oil Inlet Kits >		Replacement Liner Assemblies		A	B	C	D (Max.-Min.)	E	F Dia. Bolt	G	H	K
	Part No.	Wt.	Part No.	Wt.									
3-7/16			**132420**	47	10	18-3/4	6	16-1/8 - 14-7/8	3	3/4	1-1/2	2	12-9/16
3-15/16			**132421**	65	10-3/4	20-3/4	7	18 - 16-1/2	3-1/2	7/8	1-3/4	2-1/4	13-5/8
4-7/16	**132203**	2	**132422**	82	11-3/4	21-3/4	7-1/2	18-7/8 - 17-1/8	4	1	2	2-1/2	15-1/4
4-15/16			**132423**	113	12-3/4	24-1/4	8-1/2	21-3/8 - 19-5/8	4-1/2	1	2	2-3/4	17-3/8
5-7/16			**132424**	144	14	26-3/4	9-1/2	23-1/4 - 21-1/4	5	1-1/8	2-1/4	3-1/4	18-7/8
6			**132425**	182	16	29	10-1/2	25-1/8 - 22-7/8	5-1/2	1-1/4	2-1/2	3-1/2	20-1/8
7			**132426**	257	18	33	12-1/2	28-7/8 - 26-1/8	6-1/2	1-1/2	3	4	22-3/8
8	**132205**	2	**132427**	412	19-3/4	38	14	33-1/8 - 29-7/8	7-1/2	1-3/4	3-1/2	4-1/2	25-13/16
9			**132428**	623	22-3/4	41-1/2	15-1/2	36-5/8 - 33-3/8	8	1-3/4	3-1/2	5	28-1/4
10			**132429**	955	24-1/2	47-1/2	17	41-7/8 - 38-1/8	9	2	4	6	33-7/8
12			**132430**	1405	29	49	18	43-5/8 - 41-7/8	10	2	3	6-1/2	37

Shaft Size	L	M	N	P	Q	R	S	T	U	U1	U2
3-7/16	6-3/4	5-7/8	3-5/8	11-5/8	1-1/8	3/4	1-3/8	....	2-3/4	1-1/2	1-1/8
3-15/16	7-1/4	6-1/2	4-3/8	12-7/8	1-1/8	1	1-1/2	....	2-15/16	1-1/2	1-1/4
4-7/16	8	7	4-1/2	13-3/4	1-1/4	1	1-1/2	....	2-15/16	1-1/2	1-3/8
4-15/16	8-7/8	7-3/4	5-1/8	16	1-1/4	1-1/4	1-5/8	....	3-1/4	2	1-1/2
5-7/16	10	8-3/4	5-3/4	17-1/4	1-5/8	1-1/4	2	2-15/16	3-3/4	2	1-7/8
6	10-7/8	9-1/2	6-1/4	18-3/4	1-5/8	1-1/4	2-1/8	3-1/2	4	2	1-7/8
7	12-1/2	10-3/4	6-7/8	21-1/4	2	1-1/4	2-1/4	4	4-1/4	2	2
8	14-1/8	12-1/4	8-1/2	24-1/4	2-1/4	2	2-3/8	5-1/2	4-3/4	2	2-1/4
9	16-1/4	13-1/2	9-3/16	27-1/4	2-1/4	2	3	5-1/2	5-1/16	2	2-1/4
10	17-3/4	16	11	31	2-7/8	2-1/2	3-1/8	8-1/2	5-9/16	2-1/2	2-7/8
12	20-3/4	17-3/4	12-7/16	35-1/2	3-1/8	3	3-1/4	9	6-1/8	2-1/2	3-1/8

Shaft Size	V	V1	W ±3/16	X	Y	Z	A1	B1	C1	D1
3-7/16	3-1/4	3/4	7-5/8	8-3/4	1-1/4	3-9/16	3/4	7-1/4	1/4	4-3/16
3-15/16	3	1-1/2	8-11/16	9-13/16	1-1/4	4-1/16	1	7-11/16	1/4	4-9/16
4-7/16	3-1/4	1-5/8	9-1/8	10-1/4	1-1/4	4-7/16	1	8-1/8	1/4	4-5/8
4-15/16	3-3/4	1-3/4	10-3/4	12-7/16	1-7/8	5-3/8	1-1/4	8-1/2	1/4	4-15/16
5-7/16	4	1-3/4	11-7/16	12-7/8	1-7/8	5-5/8	1-1/4	9-1/16	1/4	5-1/4
6	3-3/4	2	12-3/16	13-1/2	1-7/8	6-1/8	1-1/4	10-7/8	3/8	6- 5/16
7	4-1/2	2	13-3/16	14-5/8	1-7/8	6-7/8	1-1/4	12-1/16	3/8	6-15/16
8	5	2	15-11/16	17-7/8	2-1/4	8-3/8	1-1/4	13-1/8	3/8	7-3/16
9	5-1/2	2	17-1/8	19-1/4	2-1/4	9-1/16	1-1/4	14-3/16	3/8	8-3/16
10	6	2	19-13/16	22-1/2	2-3/4	10-5/8	1-1/4	15-1/8	3/8	8-3/4
12	6-1/2	2	22	24-1/4	3-1/2	12-1/8	1-1/4	19-1/2	3/8	9-9/16

One required per pillow block end

> One required per pillow block

* 220 volt heaters available. See page B18-26.

⊗⊗ For recessed shaft

All sizes are pre-machined for accessories; thermocouples, circulating oil, vibration detector, heater and thermostat

FEATURES/BENEFITS PAGE B18-3	HOW TO ORDER/NOMENCLATURE PAGE B18-7	SELECTION PAGE B18-8	ACCESSORIES PAGE B18-22

SELECTION/DIMENSIONS

SLEEVOIL - RXT Series

6" THRU 14" RXT SLEEVOIL PILLOW BLOCKS

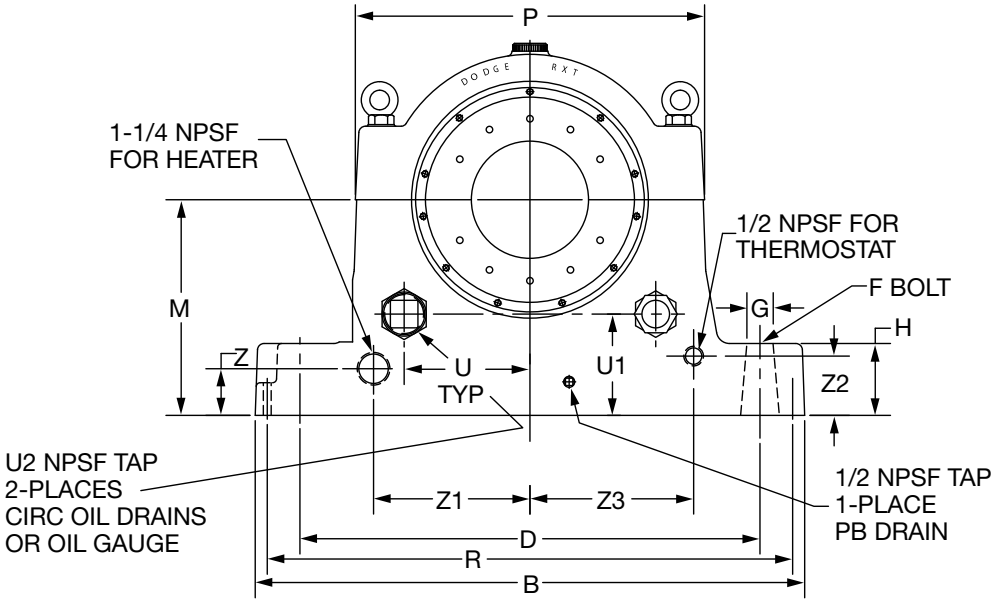

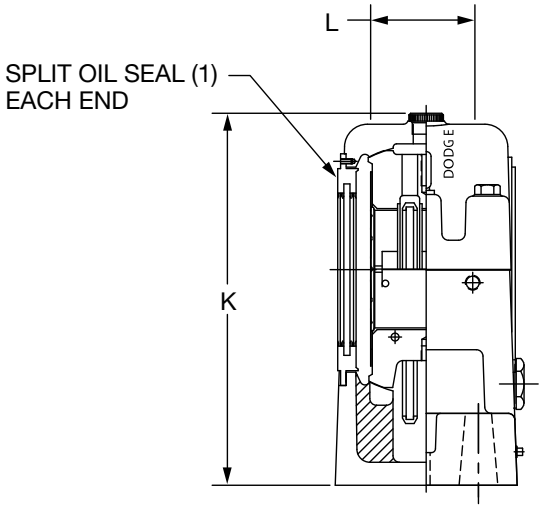

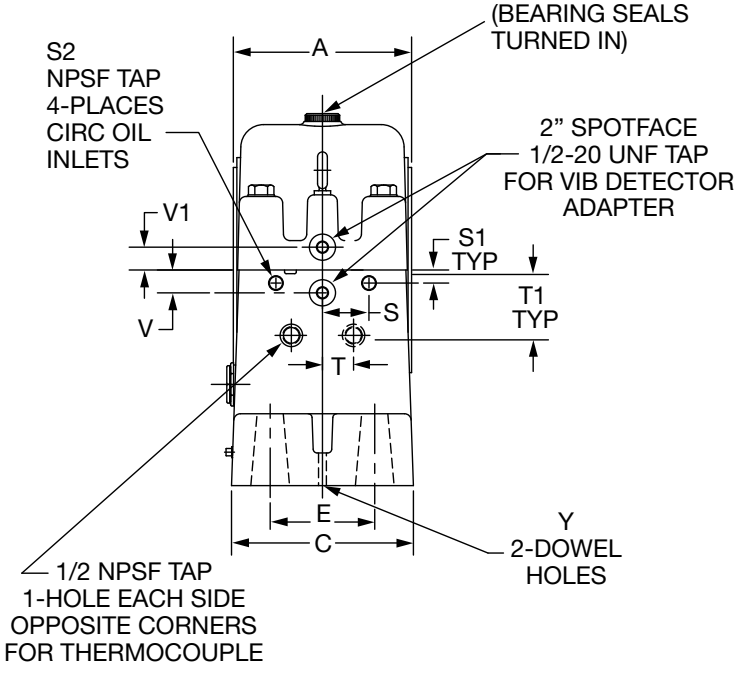

FEATURES/BENEFITS PAGE B18-3	HOW TO ORDER/NOMENCLATURE PAGE B18-7	SELECTION PAGE B18-8	ACCESSORIES PAGE B18-22



SLEEVOIL - RXT Series

6" THRU 14" RXT SLEEVOIL PILLOW BLOCKS

Size	For Shaft	Oil (Gal.)	A	B	C	D	E	F Dia. Bolt	G	H	K	L	M	P	R
6	6, 7	3-1/4	12	34-1/2	12	29-1/2	6-1/2	1-1/2	2-5/8	4-1/2	23-1/16	6-1/2	13-1/4	21-1/2	31-1/4
8	8, 9	5-1/8	14-1/4	41-3/4	14-5/8	36	8	1-3/4	2-7/8	4-1/2	27-1/4	8-1/2	15-1/2	26-3/4	38
10	10, 12, 14	7-3/4	17-1/4	49	17-3/4	42-3/4	10	2	3-1/8	5-3/8	31-5/8	11	17-3/4	32	44

Size	For Shaft	S	S1	S2	T	T1	U	U1	U2	V	V1	Y	Z	Z1	Z2	Z3
6	6, 7	2-7/8	15/16	3/4	2	4	8-1/4	6	2-1/2	1-3/4	. . . .	23/32	2-1/8	5-1/4	3-1/4	9-1/4
8	8, 9	3-5/8	15/16	3/4	2-3/8	5	10-1/8	6-1/2	2-1/2	1-3/4	. . . .	23/32	3-1/8	11-1/2	4	11-3/4
10	10, 12, 14	4-9/16	1-1/4	1	3	6-1/2	12	7-5/8	2-1/2	2	. . . .	23/32	3	14	4-1/8	14-1/2

Size	For Shaft	Housing ▲▲		S Liner Part No.	T Liner Part No. ++	Liner Wt.	Split Thrust Collar Kit *	Recessed Shaft Split Thrust Collar Kit > >	Split Seal Ring ✦	
		Part No.	Wt.						Part No.	Fits Shaft
6	6	134503	740	**134716**	**134516**	195	**134886**	**432276**	**134869**	6
	7			**134717**	**134517**		**134887**	**432277**	**134870**	7
									134871	10
8	8	134504	1091	**134718**	**134518**	353	**134888**	**432165**	**134872**	8
	9			**134719**	**134519**		**134889**	**432278**	**134873**	9
									134874	12
10	10	134505	2126	**134720**	**134520**	800	**134890**	**432279**	**134875**	10
	12			**134721**	**134521**		**134891**	**432448**	**134876**	12
	14			**134779**					**134877**	14-1/2

Order housings, liners, and seals separately.
#6, 8,& 10 bearing sizes have two oil rings.

▲▲ Housings include oil ring(s), sight gauge, pipe plugs, and eye bolts.

++ When ordering the T liner, integral thrust collars are required. Contact Dodge for exact shaft dimensions required per #**C14203**.

* For use with S liner only.
Back-up shoulders are required. Contact Dodge for shaft dimensions per #**C11235**.

> > For use with S liner only.
Recessed shaft grooves are required.
Contact Dodge for shaft dimensions per #**B48371**.

✦ One seal required for each end of housing

FEATURES/BENEFITS PAGE B18-3 | HOW TO ORDER/NOMENCLATURE PAGE B18-7 | SELECTION PAGE B18-8 | ACCESSORIES PAGE B18-22

MODIFICATIONS/ACCESSORIES



SLEEVOIL Traditional (Inch)

3-7/16" THRU 14" END CAP KITS

SLEEVOIL ACCESSORIES



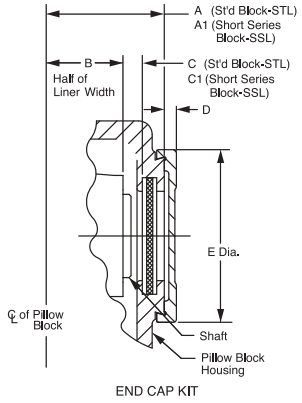

END CAP KIT

Bore Size	Pillow Block Style	End Cap Kits				A STL	A1 SSL	B #	C # STL	C1 # SSL
		Part Number	Wt.	D	E					
3-7/16	Plain/Water Cooled STL and SSL	**132542**	5.3	1/2	7-1/8	6-1/2	4-7/8	3-1/2	2-3/32	15/32
3-15/16	PLXC, STL and SSL	**432190**	6.1	1/2	8	7-1/2	5-1/2	4	2-5/8	5/8
4-7/16		**432193**	6.8	1/2	8-3/4	8-1/4	6-1/4	4-1/2	2-23/32	23/32
4-15/16		**432196**	7.3	1/2	9-1/8	9-1/8	6-7/8	5	3- 3/32	27/32
5-7/16		**132546**	11.6	1/2	10-1/2	9-7/8	7-5/8	5-1/2	3-3/32	27/32
6		**132547**	10.6	1/2	11-1/2	10-5/8	8-1/8	6	3-11/32	27/32
7		**132548**	13.5	1/2	12-9/16	12-1/4	9-3/8	7	3-29/32	1-1/32
8		**132549**	15.5	1/2	14-1/2	13-7/8	10-1/2	8	4-17/32	1- 5/32
9	STL Plain	**132564**	15.9	1/2	14-1/2	13-7/8	.....	8	4-17/32	.....
	XC					14-1/2	.....	8-1/2	4-21/32	.....
	SSL Plain					.....	10-1/2	8	.....	1-5/32
	SSL					.....	11-1/8	8-1/2	.....	1-9/32
	XC									
10	STL Plain	**132565**	16.4	1/2	14-1/2	13-7/8	.....	8	4-17/32	.....
	XC					15	.....	9	4-21/32	.....
	SSL					.....	10-1/2	8	.....	1-5/32
	Plain									
	SSL					.....	11-5/8	9	.....	1-9/32
	XC									
12	STL Plain	**132566**	26	1/2	18-3/4	15	.....	9	4-21/32	.....
14	STD Plain	**132567**	26.5	1/2	18-3/4	17		10	5-21/32	.....

Bore Size	Pillow Block Style	End Cap Kits				A	B #	C #
		Part Number	Wt.	D	E			
3-7/16	RTL	**132542**	5.3	1/2	7-1/8	5	3-3/8	27/32
3-15/16		**432190**	6.1	1/2	8	5-3/8	3-5/8	29/32
4-7/16		**432193**	6.8	1/2	8-3/4	5-7/8	4	1-1/32
4-15/16		**432196**	7.3	1/2	9-1/8	6-3/8	4-7/16	1-3/32
5-7/16		**132546**	11.6	1/2	10-1/2	7	5	1-5/32
6		**132547**	10.6	1/2	11-1/2	8	5-7/16	1-11/32
7		**132548**	13.5	1/2	12-9/16	9	6-1/4	1-17/32
8		**132549**	15.5	1/2	14-1/2	9-7/8	7-1/16	1-19/32
9		**132564**	15.9	1/2	14-1/2	11-3/8	8-1/8	2-1/32
10		**132565**	16.4	1/2	14-1/2	12-1/4	8-7/8	2-1/32
12		**132566**	26	1/2	18-3/4			

B+C (OR B+C1) = max. shaft penetration from center line of pillow block

FEATURES/BENEFITS PAGE B18-3	HOW TO ORDER/NOMENCLATURE PAGE B18-7	SELECTION PAGE B18-8	SELECTION/DIMENSIONS PAGE B18-10



SLEEVOIL Traditional (Inch)

3-7/16" THRU 14" AUXILIARY SEAL KITS

SLEEVOIL ACCESSORIES

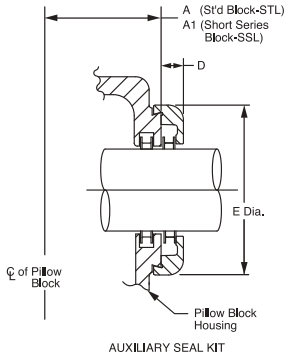

AUXILIARY SEAL KIT





Bore Size	Pillow Block Style	Auxiliary Seal Kits Part Number	Wt.	D	E	A STL	A1 SSL
3-7/16	Plain/Water Cooled STL and SSL	**132811**	4.9	15/16	7-1/8	6-1/2	4-7/8
3-15/16	PLXC, STL and SSL	**432181**	6.4	15/16	8	7-1/2	5-1/2
4-7/16		**432184**	7.0	1	8-3/4	8-1/4	6-1/4
4-15/16		**432187**	7.5	1	9-1/8	9-1/8	6-7/8
5-7/16		**133932**	12.4	1-5/16	10-1/2	9-7/8	7-5/8
6		**133933**	14.8	1-5/16	11-1/2	10-5/8	8-1/8
7		**133937**	19.0	1-7/16	12-9/16	12-1/4	9-3/8
8		**133938**	24.9	1-7/16	14-1/2	13-7/8	10-1/2
9	STL Plain	**132814**	23.1	1-5/16	14-1/2	13-7/8	.....
	XC					14-1/2	.....
	SSL Plain					.....	10-1/2
	SSL XC				.....	11-1/8	8-1/2
10	STL Plain	**132816**	22	1-5/16	14-1/2	13-7/8	.....
	XC					15	.....
	SSL Plain					.....	10-1/2
	SSL XC					.....	11-5/8
12	STL Plain	**132819**	32	1-5/16	18-3/4	15	.....
14	STD Plain	**132822**	30	1-5/16	18-3/4	17	

Bore Size	Pillow Block Style	Auxiliary Seal Kits Part Number	Wt.	D	E	A
3-7/16	RTL	**132811**	4.9	15/16	7-1/8	5
3-15/16		**432181**	6.4	15/16	8	5-3/8
4-7/16		**432184**	7.0	1	3-3/4	5-7/8
4-15/16		**432187**	7.5	1	9-1/8	6-3/8
5-7/16		**133932**	12.4	1-5/16	10-1/2	7
6		**133933**	14.8	1-5/16	11-1/2	8
7		**133937**	19.0	1-7/16	12-9/16	9
8		**133938**	24.9	1-7/16	14-1/2	9-7/8
9		**132814**	23.1	1-5/16	14-1/2	13-7/8
10		**132816**				12-1/4
12		**132819**				14-1/2

FEATURES/BENEFITS PAGE B18-3	HOW TO ORDER/NOMENCLATURE PAGE B18-7	SELECTION PAGE B18-8	SELECTION/DIMENSIONS PAGE B18-10

MODIFICATIONS/ACCESSORIES



SLEEVOIL - RTL Series

3-7/16" thru 12" RTL Replacement Part Kits

Shaft Size	Part Number	RTL Seal Kit
3-7/16	**435001**	3-7/16 SLV RTL Seal Kit
3-15/16	**435002**	3-15/16 SLV RTL Seal Kit
4-7/16	**435003**	4-7/16 SLV RTL Seal Kit
4-15/16	**435004**	4-15/16 SLV RTL Seal Kit
5-7/16	**435005**	5-7/16 SLV RTL Seal Kit
6	**435006**	6 SLV RTL Seal Kit
7	**435007**	7 SLV RTL Seal Kit
8	**435008**	8 SLV RTL Seal Kit
9	**435009**	9 SLV RTL Seal Kit
10	**435010**	10 SLV RTL Seal Kit
12	**435011**	12 SLV RTL Seal Kit

Each kit contains (2) Split Alumimun Clamp Seals, (2) O-Rings & Gasket Eliminator

Shaft Size	Part Number	RTL Plunger Screw Kit
3-7/16	**435012**	3-7/16" SLV RTL Plunger Screw Kit
3-15/16	**435012**	3-15/16" SLV RTL Plunger Screw Kit
4-7/16	**435013**	4-7/16" SLV RTL Plunger Screw Kit
4-15/16	**435014**	4-15/16" SLV RTL Plunger Screw Kit
5-7/16	**435015**	5-7/16" SLV RTL Plunger Screw Kit
6	**435015**	6" SLV RTL Plunger Screw Kit
7	**435016**	7" SLV RTL Plunger Screw Kit
8	**435017**	8" SLV RTL Plunger Screw Kit
9	**435018**	9" SLV RTL Plunger Screw Kit
10	**435019**	10" SLV RTL Plunger Screw Kit
12	**435019**	12" SLV RTL Plunger Screw Kit

Each kit contains Plunger Screw & Plunger Screw Locknut

Shaft Size	Part Number	RTL Grommet Kit
3-7/16	**435027**	3-7/16 SLV RTL Grommet Kit
3-15/16	**435028**	3-15/16 SLV RTL Grommet Kit
4-7/16	**435028**	4-7/16 SLV RTL Grommet Kit
4-15/16	**435029**	4-15/16 SLV RTL Grommet Kit
5-7/16	**435029**	5-7/16 SLV RTL Grommet Kit
6	**435029**	6 SLV RTL Grommet Kit
7	**435029**	7 SLV RTL Grommet Kit
8	**435030**	8 SLV RTL Grommet Kit
9	**435030**	9 SLV RTL Grommet Kit
10	**435031**	10 SLV RTL Grommet Kit
12	**435032**	12 SLV RTL Grommet Kit

Each kit contains (2) grommets & grommet plates, (4) Lock Tubes, (8) Lock Nuts, (4) Coolant Pipes & Gasket Eliminator

Shaft Size	Part Number	RTL - SLEEVOIL Coolant Hose Kit
3-7/16	**434770**	3/4" SLEEVOIL Coolant Hose Kit
3-15/16	**434771**	1" SLEEVOIL Coolant Hose Kit
4-7/16	**434771**	1" SLEEVOIL Coolant Hose Kit
4-15/16	**434772**	1-1/4"SLEEVOIL Coolant Hose Kit
5-7/16	**434772**	1-1/4"SLEEVOIL Coolant Hose Kit
6	**434772**	1-1/4"SLEEVOIL Coolant Hose Kit
7	**434772**	1-1/4"SLEEVOIL Coolant Hose Kit
8	**434773**	2" SLEEVOIL Coolant Hose Kit
9	**434773**	2" SLEEVOIL Coolant Hose Kit
10	**434774**	2-1/2" SLEEVOIL Coolant Hose Kit
12	**434775**	3" SLEEVOIL Coolant Hose Kit

Each coolant hose kit contains (2) straight (inlet/outlet) hoses, (1) return hose and the required couplers, adapters and fittings.

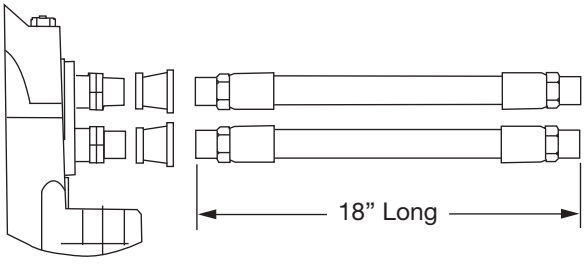

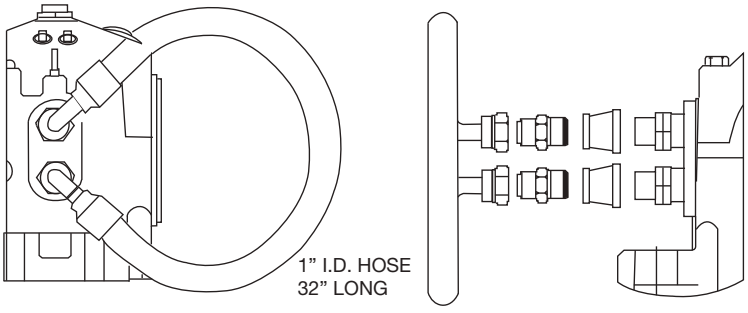

Coolant Hose Kit illustrated here.

FEATURES/BENEFITS PAGE B18-3 | HOW TO ORDER/NOMENCLATURE PAGE B18-7 | SELECTION PAGE B18-8 | SELECTION/DIMENSIONS PAGE B18-10



SLEEVOIL - R-Series Replacement Part Kits

Shaft Size	Part Number	R-Series - SLEEVOIL Dust Seal Kits
1-7/16	**389820**	1-7/16 Dust Seal Kit
1-11/16	**389821**	1-11/16 Dust Seal Kit
1-15/16	**389822**	1-15/16 Dust Seal Kit
2-3/16	**389823**	2-3/16 Dust Seal Kit
2-7/16	**389824**	2-7/16 Dust Seal Kit
2-11/16	**389825**	2-11/16 Dust Seal Kit
2-15/16	**389826**	2-15/16 Dust Seal Kit
3-7/16	**389827**	3-7/16 Dust Seal Kit
3-15/16	**389828**	3-15/16 Dust Seal Kit
4-7/16	**389829**	4-7/16 Dust Seal Kit
4-15/16	**389830**	4-15/16 Dust Seal Kit
5-7/16	**389831**	5-7/16 Dust Seal Kit
6	**389832**	6 Dust Seal Kit
7	**389833**	7 Dust Seal Kit
8	**389834**	8 Dust Seal Kit
9	**389835**	9 Dust Seal Kit
10 *	**389836**	10 Dust Seal Kit
12 *	**389837**	12 Dust Seal Kit

Each kit contains (2) Dust Seals , (2) Seal Retainers & Gaket Eliminator
* Kit contains (4) seal retainers

Shaft Size	Part Number	R-Series - Coolant Hose Kit
1-11/16	**133344**	1/4" SLEEVOIL Flexible Water Hose Kit
1-15/16	**133344**	1/4" SLEEVOIL Flexible Water Hose Kit
2-3/16	**133344**	1/4" SLEEVOIL Flexible Water Hose Kit
2-7/16	**133344**	1/4" SLEEVOIL Flexible Water Hose Kit
2-11/16	**133344**	1/4" SLEEVOIL Flexible Water Hose Kit
2-15/16	**133344**	1/4" SLEEVOIL Flexible Water Hose Kit
3-7/16	**133344**	1/4" SLEEVOIL Flexible Water Hose Kit
3-15/16 XC	**434771**	1" SLEEVOIL Coolant Hose Kit
4-7/16 XC	**434771**	1" SLEEVOIL Coolant Hose Kit
4-15/16 XC	**434772**	1-1/4" SLEEVOIL Coolant Hose Kit
5-7/16 XC	**434772**	1-1/4" SLEEVOIL Coolant Hose Kit
6 XC	**434772**	1-1/4" SLEEVOIL Coolant Hose Kit
7 XC	**434772**	1-1/4" SLEEVOIL Coolant Hose Kit
8 XC	**434772**	1-1/4" SLEEVOIL Coolant Hose Kit
9 XC	**434772**	1-1/4" SLEEVOIL Coolant Hose Kit
10 XC	**434797**	1-1/2" SLEEVOIL Coolant Hose Kit
12 XC	**434773**	2" SLEEVOIL Coolant Hose Kit

Each coolant hose kit contains (2) straight (inlet/outlet) hoses, (1) return hose and the required couplers, adapters and fittings.

Shaft Size	Part Number	R-Series - SLEEVOIL Plunger Screw Kit
3-15/16	**435012**	3-15/16 PL-XC Plunger Screw Kit
4-7/16	**435021**	4-7/16 PL-XC Plunger Screw Kit
4-15/16	**435021**	4-15/16 PL-XC Plunger Screw Kit
5-7/16	**435013**	5-7/16 PL-XC Plunger Screw Kit
6	**435015**	6 PL-XC Plunger Screw Kit
7	**435016**	7 PL-XC Plunger Screw Kit
8	**435016**	8 PL-XC Plunger Screw Kit
9 XC	**435018**	9 PL-XC Plunger Screw Kit
10 XC	**435018**	10 PL-XC Plunger Screw Kit
12 XC	**435019**	12 PL-XC Plunger Screw Kit
9 PL	**435016**	9 PL-XC Plunger Screw Kit
10 PL	**435016**	10 PL-XC Plunger Screw Kit
12 PL	**435018**	12 PL-XC Plunger Screw Kit

Each kit contains Plunger Screw & Plunger Screw Locknut

Shaft Size	Part Number	R-Series - SLEEVOIL Grommet Kit
3-15/16	**435033**	3-15/16 PL-XC Grommet Kit
4-7/16	**435033**	4-7/16 PL-XC Grommet Kit
4-15/16	**435034**	4-15/16 PL-XC Grommet Kit
5-7/16	**435034**	5-7/16 PL-XC Grommet Kit
6	**435035**	6 PL-XC Grommet Kit
7	**435035**	7 PL-XC Grommet Kit
8	**435036**	8 PL-XC Grommet Kit
9 PL	**435037**	9 PLAIN Grommet Kit
9 XC	**435038**	9 XC Pipe Grommet Kit
10 PL	**435037**	10 PLAIN Grommet Kit
10 XC	**435039**	10 XC Pipe Grommet Kit
12 XC	**435040**	12 XC Pipe Grommet Kit

Each kit contains (2) Rubber Grommets, (2) Grommet Plates, (8) Screws, (4) Coolant Pipes - in PL-XC & XC Grommett Kits only & Gasket Eliminator



PL-XC grommets and grommet plates pictured here.

FEATURES/BENEFITS PAGE B18-3	HOW TO ORDER/NOMENCLATURE PAGE B18-7	SELECTION PAGE B18-8	SELECTION/DIMENSIONS PAGE B18-10

MODIFICATIONS/ACCESSORIES



SLEEVOIL - Heater / Thermostat

Shaft Size	Part Number	RTL - Combination Heater / Thermostat - 110V
3 -7/16	**434721**	175 W 110V Immersion Heater / T-Stat Combo
3 -15/16	**434725**	260 W 110 V Immersion Heater / T-Stat Combo
4- 7/16	**434725**	260 W 110 V Immersion Heater / T-Stat Combo
4 -15/16	**434727**	480 W 110 V Immersion Heater / T-Stat Combo
5 -7/16	**434727**	480 W 110 V Immersion Heater / T-Stat Combo
6	**434727**	480 W 110 V Immersion Heater / T-Stat Combo
7	**434729**	740 W 110 V Immersion Heater / T-Stat Combo
8	**434729**	740 W 110 V Immersion Heater / T-Stat Combo
9	**434729**	740 W 110 V Immersion Heater / T-Stat Combo
10	**434729**	740 W 110 V Immersion Heater / T-Stat Combo
12	**434735**	1600 W 110 V Immersion Heater / T-Stat Combo

Single unit - 110V Combination Heater and Thermostat

Shaft Size	Part Number	RTL - Combination Heater / Thermostat - 220V
3 -7/16	**434722**	175 W 220V Immersion Heater / T-Stat Combo
3 -15/16	**434726**	260 W 220 V Immersion Heater / T-Stat Combo
4 -7/16	**434726**	260 W 220 V Immersion Heater / T-Stat Combo
4 -15/16	**434728**	480 W 220 V Immersion Heater / T-Stat Combo
5 -7/16	**434728**	480 W 220 V Immersion Heater / T-Stat Combo
6	**434728**	480 W 220 V Immersion Heater / T-Stat Combo
7	**434730**	740 W 220 V Immersion Heater / T-Stat Combo
8	**434730**	740 W 220 V Immersion Heater / T-Stat Combo
9	**434730**	740 W 220 V Immersion Heater / T-Stat Combo
10	**434730**	740 W 220 V Immersion Heater / T-Stat Combo
12	**434736**	1600 W 220 V Immersion Heater / T-Stat Combo

Single unit - 220V Combination Heater and Thermostat

Shaft Size	Part Number	R-Series - Combination Heater / Thermostat - 110V
2-7/16 *	**132834**	50 W 110V Immersion Heater
2-11/16 *	**132384**	50 W 110V Immersion Heater
2-15/16 *	**132384**	50 W 110V Immersion Heater
3-7/16	**434719**	100 W 110V Immersion Heater / T-Stat Combo
3-15/16	**434721**	175 W 110 V Immersion Heater / T-Stat Combo
4-7/16	**434721**	175 W 110 V Immersion Heater / T-Stat Combo
4-15/16	**434721**	175 W 110 V Immersion Heater / T-Stat Combo
5-7/16	**434721**	175 W 110 V Immersion Heater / T-Stat Combo
6	**434725**	260 W 110 V Immersion Heater / T-Stat Combo
7	**434725**	260 W 110 V Immersion Heater / T-Stat Combo
8	**434727**	480 W 110 V Immersion Heater / T-Stat Combo
9 XC	**434729**	740 W 110 V Immersion Heater / T-Stat Combo
9 PL	**434727**	480 W 110 V Immersion Heater / T-Stat Combo
10 XC	**434729**	740 W 110 V Immersion Heater / T-Stat Combo
10 PL	**434727**	480 W 110 V Immersion Heater / T-Stat Combo
12 XC	**434729**	740 W 110 V Immersion Heater / T-Stat Combo
12 PL	**434729**	740 W 110 V Immersion Heater / T-Stat Combo
14 PL	**434729**	740 W 110 V Immersion Heater / T-Stat Combo

Single unit - 110V Combination Heater and Thermostat
* Requires listed heater part number and thermostat p/n 133116

Heater / thermostat combo includes LED current indicating light and NEMA 4 LB enclosure

2-7/16", 2-11/16" and 2-15/16" heater (132834 or 434835) to be used with thermostat part 133116. Combination heater/thermostat is not available for small bore Sleevoil bearings.

Shaft Size	Part Number	R-Series - Combination Heater / Thermostat - 220V
2 7/16	**434835 ***	50 W 220V Immersion Heater
2 11/16	**434835 ***	50 W 220V Immersion Heater
2 15/16	**434835 ***	50 W 220V Immersion Heater
3-7/16	**434720**	100 W 220V Immersion Heater / T-Stat Combo
3-15/16	**434722**	175 W 220 V Immersion Heater / T-Stat Combo
4-7/16	**434722**	175 W 220 V Immersion Heater / T-Stat Combo
4-15/16	**434722**	175 W 220 V Immersion Heater / T-Stat Combo
5-7/16	**434722**	175 W 220 V Immersion Heater / T-Stat Combo
6	**434726**	260 W 220 V Immersion Heater / T-Stat Combo
7	**434726**	260 W 220 V Immersion Heater / T-Stat Combo
8	**434728**	480 W 220 V Immersion Heater / T-Stat Combo
9 XC	**434730**	740 W 220 V Immersion Heater / T-Stat Combo
9 PL	**434728**	480 W 220 V Immersion Heater / T-Stat Combo
10 XC	**434730**	740 W 220 V Immersion Heater / T-Stat Combo
10 PL	**434728**	480 W 220 V Immersion Heater / T-Stat Combo
12 XC	**434730**	740 W 220 V Immersion Heater / T-Stat Combo
12 PL	**434730**	740 W 220 V Immersion Heater / T-Stat Combo
14 PL	**434730**	740 W 220 V Immersion Heater / T-Stat Combo

Single unit - 220V Combination Heater and Thermostat
* Requires listed heater part number and thermostat p/n 133116



FEATURES/BENEFITS PAGE B18-3	HOW TO ORDER/NOMENCLATURE PAGE B18-7	SELECTION PAGE B18-8	SELECTION/DIMENSIONS PAGE B18-10



SLEEVOIL - R Series and RTL Trapezoidal Oil Ring
1-7/16" Thru 14" Trapezoidal Section Oil Ring

- Lower operating temperatures
- Designed for existing and new Sleevoil bearings
- Interchangeable with T-section oil ring
- Increases oil delivered to the shaft
- Increases bearing maximum operating speed range
- Increases oil ring life

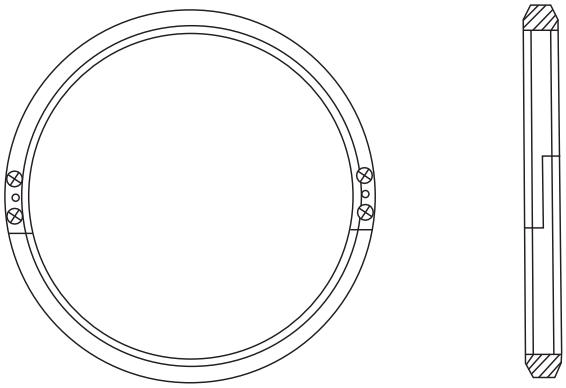



Plain	PLXC or WC Repl.	RTL	T-Section Number	Trapezoidal Oil Ring Number
1-7/16			**130063**	**135700**
1-11/16	1-11/16		**130044**	**135704**
1-15/16	1-15/16		**130045**	**135708**
2-3/16	2-3/16		**130047**	**135712**
2-7/16	2-7/16		**130049**	**135716**
2-11/16	2-11/16		**130050**	**135720**
2-15/16	2-15/16		**130051**	**135724**
3-7/16	3-7/16		**130054**	**135728**
3-15/16	3-15/16	3-7/16	**130056**	**135290**
4-7/16	4-7/16	3-15/16	**130057**	**135291**
4-15/16	4-15/16	4-7/16	**130058**	**135292**
5-7/16	5-7/16	4-15/16	**130059**	**135293**
6	6	5-7/16	**130060**	**135294**
		6	**130078**	**135295**
7	7		**130062**	**135136**
8	8	7	**130065**	**135296**
9, 10		8	**130066**	**135297**
	9		**130067**	**135137**
		9	**130068**	**135298**
	10		**130064**	**135138**
12			**130070**	**135732**
	12	10	**130073**	**135299**
14			**130069**	**135736**
		12	**130071**	**135135**

Note: T-section oil rings will be discontinued and superseded to the Trapezoidal oil rings as inventory is depleted.

FEATURES/BENEFITS PAGE B18-3	HOW TO ORDER/NOMENCLATURE PAGE B18-7	SELECTION PAGE B18-8	SELECTION/DIMENSIONS PAGE B18-10

MODIFICATIONS/ACCESSORIES



SLEEVOIL RXT Pillow Blocks

2-15/16" THRU 12" Trapezoidal Section Oil Ring

SLEEVOIL ACCESSORIES

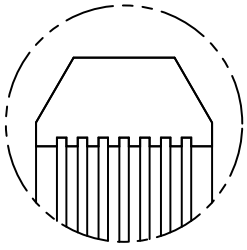

STYLE A

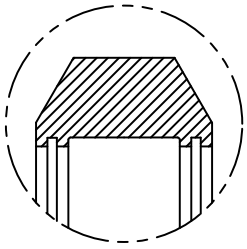

STYLE B

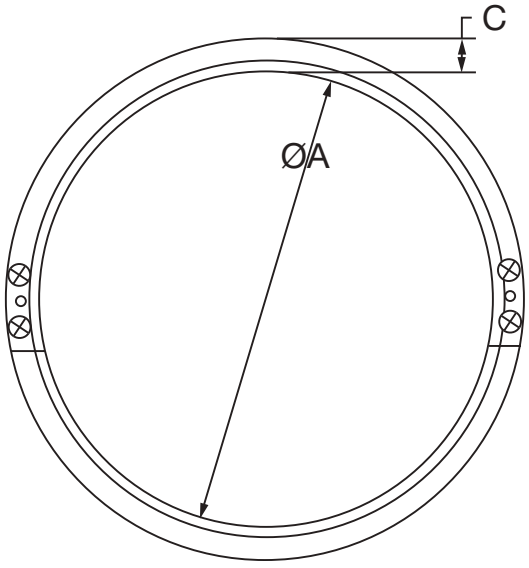

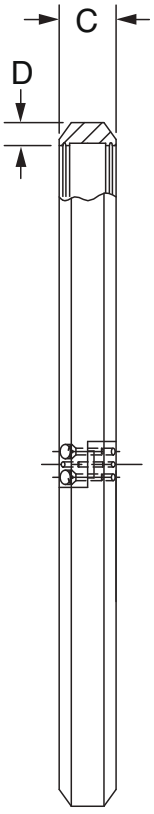

Ring No.	Shaft Size	Part Number	WT. (Lbs)	Style	Ø A	Ø B	C	D
3	2-15/16 3-7/16	**134796**	3.38	A	6-3/4	7-3/4	1	1/2
4	3-15/16 4-7/16	**134798**	4.10	A	8-1/4	9-3/8	1-9/64	9/16
5	4-15/16 5-7/16	**134800**	5.21	A	10-5/8	11-3/4	1-9/64	9/16
6	6 7	**134803**	5.65	B	12-1/2	13-5/8	1-9/64	9/16
8	8 9	**134806**	6.89	B	15-1/4	16-3/8	1-9/64	9/16
10	10 12	**134809**	8.25	B	18-1/4	19-3/8	1-9/64	9/16

FEATURES/BENEFITS PAGE B18-3	HOW TO ORDER/NOMENCLATURE PAGE B18-7	SELECTION PAGE B18-8	SELECTION/DIMENSIONS PAGE B18-10



SLEEVOIL

VIBRATION DETECTOR ADAPTER KIT
PART NUMBER 430153

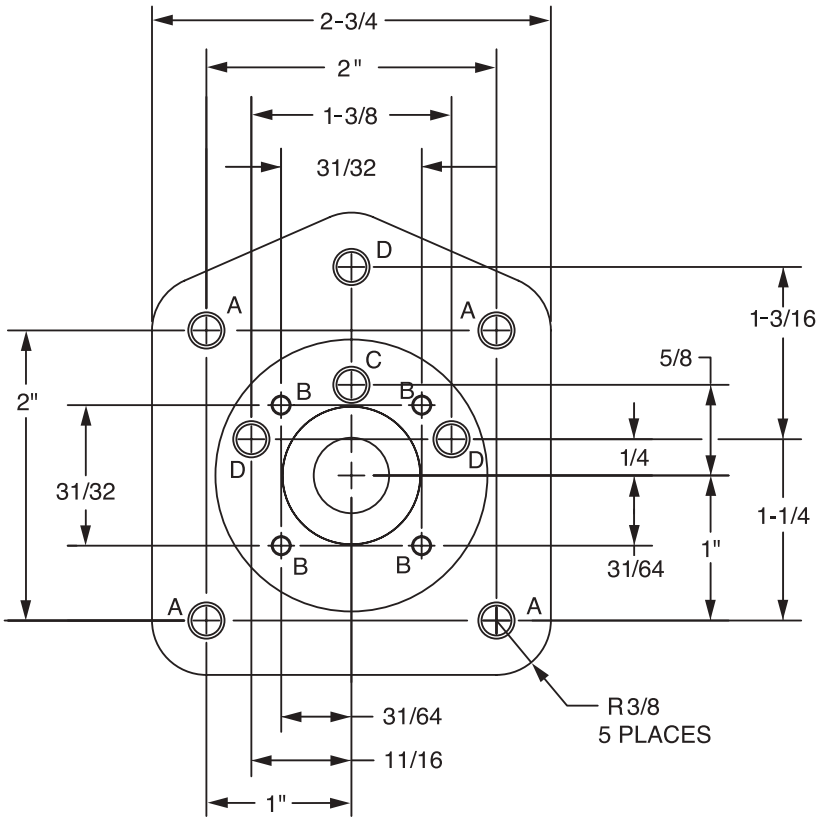

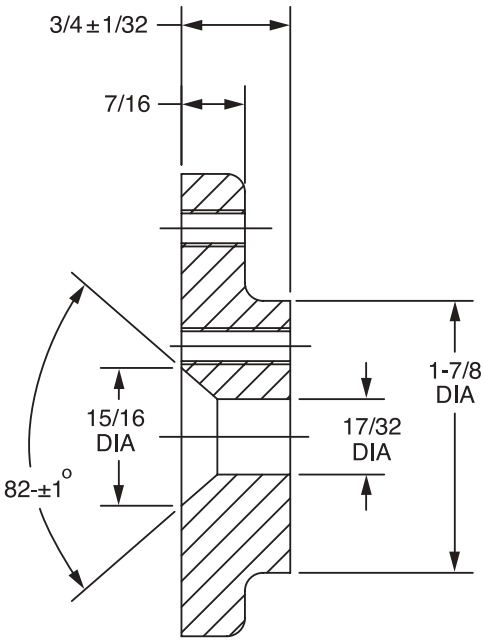

Vibration Detector Adapter Kit
Part Number 430153
SLEEVOIL Accessories

(A) Hole 5 (.2055) Dia. Drill Thru 1/4-20 Tap Thru - A30935
(B) Hole #32 (.116) Dia. Drill Thru 6-32 Tap Thru - A30936
(C) Hole 7/32 Dia. Drill Thru 1/4-28 Tap Thru - A30937
(D) Hole 5 (.2055) dia. Drill Thru 1/4-20 Tap Thru - A30938

Blank Vibration Detector Adapter Kit
Part Number 433326

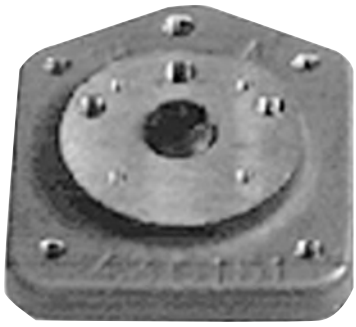

FEATURES/BENEFITS PAGE B18-3	HOW TO ORDER/NOMENCLATURE PAGE B18-7	SELECTION PAGE B18-8	SELECTION/DIMENSIONS PAGE B18-10

MODIFICATIONS/ACCESSORIES



SLEEVOIL
ONE SYSTEM FOR TWO SLEEVOIL BEARINGS

Oil level and filtration system fits all Dodge SLEEVOIL Bearing

1. Five Gallon Tank
2. Oil Pump Supply Line
3. Pressure Gauge
4. Spin on Filter
5. Standard NEMA Motor
6. Return Line Connection—1" NPT coupling with two inlets
7. Removable Tank Cover
8. Oil Level/Temperature Gauge
9. Mounting Bracket
10. Immersion Heater & Thermostat **Option**—1"NPT Port
11. Filtered Breather (not shown)
12. Nameplate (not shown)

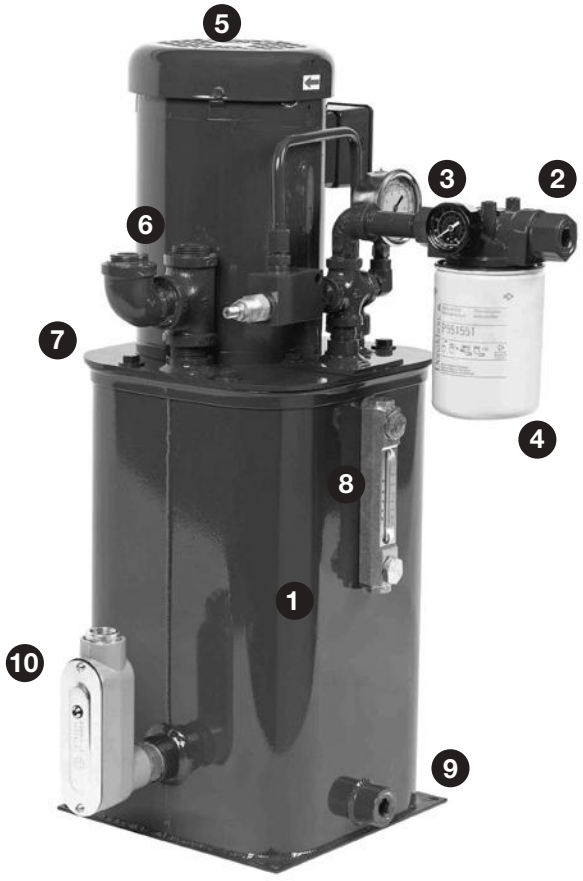

Oil Level Filtration System Part Numbers:

Description	Part Number
Single Phase Motor*, 2.0 GPM Pump	**077587**
Three Phase Motor*, 2.0 GPM Pump	**077588**
Three Phase XP-Motor*, 2.0 GPM Pump	**077589**
Three Phase Motor (575V) 2.0 GPM Pump	**077484**

*Single Phase Motor 60 Hz 120 Volt *Three Phase Motor 50/60 Hz 230/460 Volt

Oil Inlet Connections:

SLEEVOIL Series	Bore Sizes	Need Circulating Oil Grommet Kit Part Number
R Series	1-7/16" – 3-7/16"	**Not Required**
	3-15/16"	**432153**
	4-7/16" – 4-15/16"	**430198**
	5-7/16" – 12"	**430155**
RTL Series	3-7/16" – 5-7/16"	**132203**
	6" – 12"	**132205**

Optional Parts[1]

Description	Part Number
Combination Heater/Thermostat 260 Watt, 120 Volt Heater	434725
Combination Heater/Thermostat 260 Watt, 240 Volt Heater	434726
Flow Meter Kit	079498
Desiccant Filter Kit (to be installed in series with standard filter)	079754

[1]Not included with OLF2. Order desired part if required.

Flow Meter Kit (optional[1])

Connects to OLF-2 output in order to control the oil flow rates between two bearings.

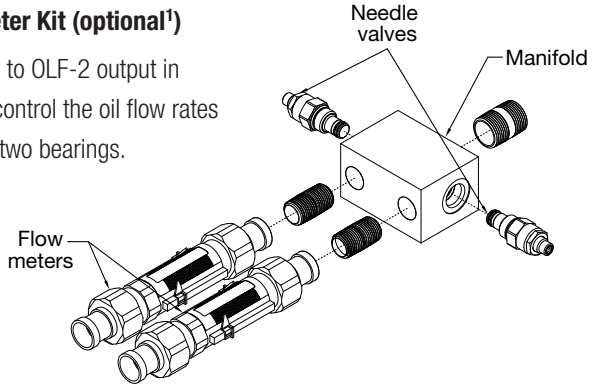

FEATURES/BENEFITS PAGE B18-3 | HOW TO ORDER/NOMENCLATURE PAGE B18-7 | SELECTION PAGE B18-8 | SELECTION/DIMENSIONS PAGE B18-10



Dodge SLEEVOIL Bearing Isolator
RTL AND R-SERIES PILLOW BLOCKS

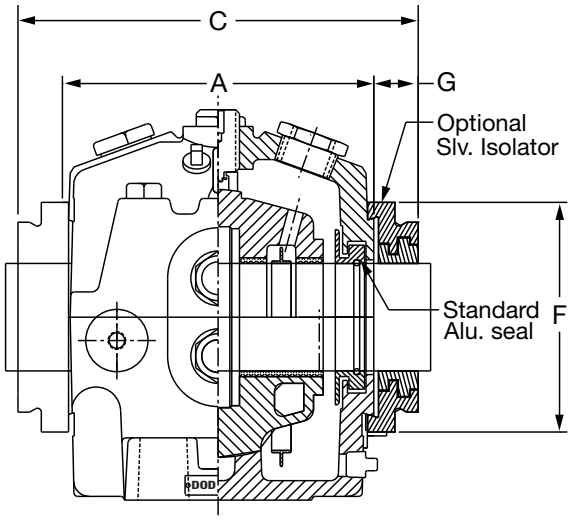

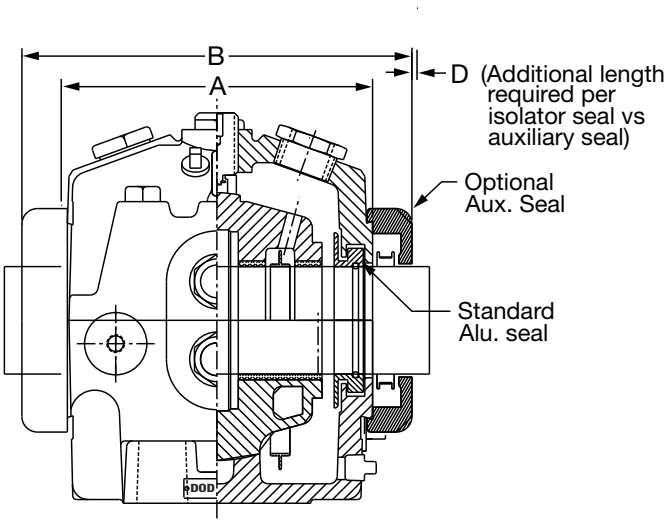

RTL HOUSING LENGTH THRU BORE WITH DODGE SEAL OFFERINGS

Size (Inches	Part No	A*	B*	C*	D*	E*	F*	G*
3-7/16	**434706**	10	11-7/8	12-5/8	3/8	3/4	7-3/8	1-5/16
3-15/16	**434707**	10-3/4	12-5/8	13-3/8	3/8	3/4	8-1/4	1-5/16
4-7/16	**434708**	11-3/4	13-3/4	14-3/8	5/16	5/8	9	1-5/16
4-15/16	**434709**	12-3/4	14-3/4	15-3/8	5/16	5/8	9-1/2	1-5/16
5-7/16	**434710**	14	16-5/8	16-5/8	0	0	10-3/4	1-5/16
6	**434711**	16	18-5/8	18-7/8	1/8	1/4	11-5/8	1-7/16
7	**434712**	18	20-7/8	20-7/8	0	0	12-3/4	1-7/16
8	**434713**	19-3/4	22-5/8	22-5/8	0	0	14-3/4	1-7/16
9	**434714**	22-3/4	25-3/8	25-5/8	1/8	1/4	14-3/4	1-7/16
10	**434715**	24-1/2	27-1/8	27-3/8	1/8	1/4	14-3/4	1-7/16
12	**434716**	29	31-5/8	31-7/8	1/8	1/4	18-1/2	1-7/16

NOTES:
A - Length thru housing bore with standard aluminum seal
B - Length thru housing bore with optional auxiliary seals
C - Length thru housing bore with optional isolator seals
D - Additional length required per isolator seal vs auxiliary seal
E - Additional shaft length required
F - Isolator outside diameter
G - Isolator width from housing end face
* - Isolator can also be used with R-Series Pillow Blocks

NOTE: For further information regarding Dodge SLEEVOIL Bearing Isolator, see page B18-6

NOTES



CONTENTS

Take-Up Frames

Features / Benefits B19-2
How To Order B19-6
Nomenclature B19-7
Selection/Dimensions
- Narrow Slot B19-8
- Wide Slot B19-11
- ULTRA KLEEN Stainless Steel B19-12
- Telescoping B19-15
- Top Angle B19-20
- TPHU B19-24
- Center Pull B19-26
- LD Protected Screw B19-30
- HD Protected Screw B19-36
- BRONZOIL® B19-44
- Type A & B B19-45

Part Number Index INDEX-1
Key Word Index KEYWORD-1

FEATURES/BENEFITS



Take-Up Frames

The flexibility of the ten basic take-up frames allow for the mounting of DODGE Ball, Roller, and Sleeve Bearings to encompass the vast range of conveyor, belt, and chain take-up applications.

Narrow Slot Take-Up Frame - NS



Five sizes of Narrow Slot Ball Bearing Take-Up Frames-Eleven (11) take-up frames with travels of 6 to 18 inches for:

- GT & GTM Narrow Slot Take-Up Bearings from 3/4” through 2-7/16” shaft size and metric 20mm to 60mm.
- SC, VSC & SCM Ball Bearing Take-Up Bearing from 1/2” through 2-7/16” shaft size, and metric 20 mm to 60 mm.
- SXV and SXR Ball Bearing Take-Up Bearing from 3/4” through 2-7/16” shaft size.
- DL Ball Bearing Take-Up Bearing from 3/4” through 1-7/16” shaft size.
- LT700 and LT1000 SOLIDLUBE Take-Up Bearing from 3/4” through 2-1/2” shaft size.

Wide Slot Take-Up Frame - WS

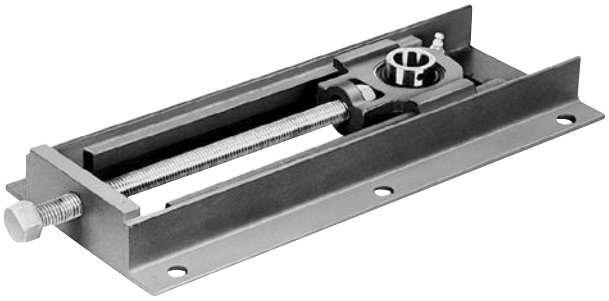

Six sizes of Wide Slot Ball Bearing Take-Up Frames-Thirty (30) take-up frames with travels of 1-1/2 to 30 inches for:

- GT & GTM Wide Slot Ball Bearings from 3/4” through 3” shaft size and metric 20mm to 75mm.
- SC, VSC and SCM Wide Slot Take-Up Bearings from 1/ 2” through 3" shaft size, and metric 20 mm to 75 mm.
- SXV and SXR Wide Slot Take-Up Bearings from 3/4” through 2-7/16” shaft size.
- DL Ball Bearing Take-Up Bearing from 1-7/16” through 1-15/16” shaft size.
- LT700 and LT1000 SOLIDLUBE Wide Slot Take-Up Bearing from 3/4” through 3" shaft size.

Telescoping Take-Up Frame - TS



Telescoping Take-Up Frames

- Space saving telescoping take-up frame quickly mounts to the side of a conveyor
- Use any standard ball or roller bearing 2-bolt pillow block
- Factory lubricated adjustment screw
- Internal take-up frame screw is protected from the surrounding environment
- Bearing mounting plate is standard on all Dodge telescoping take-up frames.

Available Options

- Four bolt mounting plate (4B)
- Tapped base mounting plate (TB)
- Weld-on frame (without mounting feet) (WF)
- Stainless Steel (SS)
- Grease Fitting (GF)



Take-Up Frames

Top Angle Take-Up Frame - TP



Six sizes of Top Angle Take-Up Frames-Thirty-Six (36) Take-Up frames with travels of 12 to 48 inches for:

- GLT-700 & GLT-1000 Series (SOLIDLUBE Sleeve) Take-Up bearings from 1-15/16” through 3" shaft size.
- Type H (Babbitted Sleeve) Take-Up bearings from 1-15/16” through 3-15/16” shaft size.
- Type G (SC Ball Bearing) Take-Up bearings from 1-15/16” through 2-15/16” shaft size.
- Type GXR (SXR Ball Bearing) Take-Up bearings from 1-15/16” through 2-7/16” shaft size.
- Type GM (SCM Ball Bearing) Take-Up bearings from 1-11/16” through 3-1/2” shaft size.
- Type E (Tapered Roller) Take-Up bearings from 1-3/4” through 4" shaft size.
- Type K (Tapered Roller) Take-Up bearings from 1-3/4” through 3-15/16” shaft size.
- TP S2000 (Spherical Roller) Take-Up bearings from 1-7/8” through 4" shaft size.

TPHU Take-Up Frame



Six sizes of TPHU Take-Up Frames-Twenty-Four (24) Take-Up frames with travels of 12 to 36 inches for:

- TPHU S-2000 (Spherical Roller) Take-Up Bearings from 1-7/8” through 5” shaft size.

Center Pull Take-Up Frame - CP



Nine sizes of Center Pull Wide Slot Take-Up Frames-Forty-five (45) take-up frames with travels of 12 to 36 inches for:

- Type E tapered wide slot bearing from 1-3/8” to 3" bore size.
- Type K tapered wide slot bearing from 1-3/8” to 3" bore size.
- S-2000 spherical wide slot bearing from 1-1/8” to 5" bore size.
- Imperial spherical wide slot bearing from 1-7/16” to 4” bore size.
- U.S. Patent No. 4,676,670

FEATURES/BENEFITS

Take-Up Frames

BRONZOIL Take-Up Frame - BOTU



One size of BRONZOIL®) Sleeve Bearing Take-Up-The BRONZOIL Take-Up is recommended for light-to-medium loads and for use at moderate speeds; such as package conveyors, light material handling installations, or other similar applications.

There are 6 take-ups from 1/2” through 1” shaft size with 4 inch travel.

Light Duty Take-Up Frame - LD



Six sizes of LD Protected Screw Take-Up Frames - Forty-Five (45) take-up frames with 6 to 48 inch travel for:

- SC/SCB (Ball Bearing) pillow blocks from 1/2” through 2-15/16” bore size.
- SXR/SXRB & SXV/SXVB (Ball Bearing) pillow blocks from 1/2” through 2-7/16” bore size
- DL/DLB (Ball Bearing) pillow blocks from 3/4” through 2-15/16” bore size.
- SCM (Ball Bearing) pillow blocks from 1-7/16” through 3-1/2” bore size.
- DLM (Ball Bearing) pillow blocks from 1” through 3-7/16” bore size
- Babbitted (Sleeve) Solid Journal bearing from 1/2” through 2-15/16” bore size.
- SOLIDLUBE (Sleeve) LT700 and LT1000 Series pillow blocks from 3/4” through 3” bore size.
- SOLIDLUBE (Sleeve) LTB700 and LTB1000 Series pillow blocks from 3/4” through 2-1/2” bore size.
- UNISPHERE (Spherical Roller) two (2) bolt base pillow block from 1-7/16” through 3-1/2” bore sizes.
- Imperial (Spherical Roller) two (2) bolt base pillow block from 1-7/16” through 3-15/16” bore size.
- SCH, SCH-E SXRH, SXRH-E, DLH, DLH-E SCMH SCMH-E, DLMH, DLMH-E.
- GT/GTB (Ball Bearing) pillow blocks from 1/2” through 2-15/16” bore size
- GTM (Ball Bearing) pillow blocks from 1” through 3-7/16” bore size

FEATURES/BENEFITS

Take-Up Frames

Heavy Duty Take-Up Frame - HD



Eight sizes of HD Protected Screw Take-Up Frames-Forty-One (41) take-up frames with travels from 12 to 60 inches for:

- Angle Babbitted (Sleeve) pillow blocks from 1-15/16” through 5-15/16”, bore size.
- Angle Bronze Bushed (Sleeve) pillow blocks from 1-15/16” through 5-15/16”, bore size.
- Type E (Taper Roller) pillow blocks from 1-1/2” through 6" bore size.
- Type K (Taper Roller) pillow blocks from 1-1/2” through 3-15/16” bore size.
- K/DI (Taper Roller) pillow blocks from 1-1/2” through 5" bore size.
- Type C (Taper Roller) pillow blocks from 1-11/16” through 5" bore size.
- Special Duty (Taper Roller) pillow blocks from 2-11/16” through 6" bore size.
- SOLIDLUBE (Sleeve) MM700 and MM1000 Series pillow blocks from 3-7/16” through 5" bore size.
- SAF-XT, TAF, ISAF, etc. (Spherical and Tapered Roller) pillow blocks from 1-15/16” through 5-1/2” bore size and larger.
- USAF, SAFS spherical pillow blocks, 2-bolt and 4-bolt from 2-7/16” through 5-1/2” bore size.
- S2000 spherical pillow blocks, 2-bolt and 4-bolt from 1-7/8” through 5" bore size.
- UNISPHERE (Spherical Roller) pillow block 2-bolt base from 1-15/16” through 4" bore sizes.
- Imperial (Spherical roller) pillow block 2-bolt and 4-bolt from 1-15/16” through 4-15/16” bore size.
- For larger bore bearings use HD600 or HD650, consult DODGE.

HOW TO ORDER



Take-Up Frames

There are two ways to specify DODGE Take-Up Frames. Most of the product offerings have part numbers with listings shown throughout this catalog. Use of part numbers ensures accurate order processing.

When part numbers are not shown, the product may be specified by description or part name. This method is used when ordering units that include modifications or options. To order by description, use the nomenclature key shown on page B19-7 and add any special instructions to the end of the description for options not covered by the nomenclature.

NOTE: All Take-Up Frames, except Bronzoil Take-Ups, are without the Take-Up Bearings. Thus, for a complete Take-Up; order a Take-Up Frame and Take-Up Bearing.

The HD Protected Screw Take-Up Frames

HD 200 through HD 350 Take-Up frames will accommodate pillow blocks on saddles which are slotted for two-bolt Pillow Blocks and may be ordered by part numbers. When using four-bolt Pillow Blocks; or on HD frames 400 and larger, please supply:

1. Bore size of pillow block
2. Type of block (Type E, Double Interlock, SAF-XT, etc.)
3. Whether pillow block is two-or four-bolt style
4. Frame Travel

Modifications:

For OEM special Take-Up Frames consult DODGE.

Certain modifications are available such as Stainless Steel Screw and non-standard travel lengths.

NOMENCLATURE



Take-Up Frames

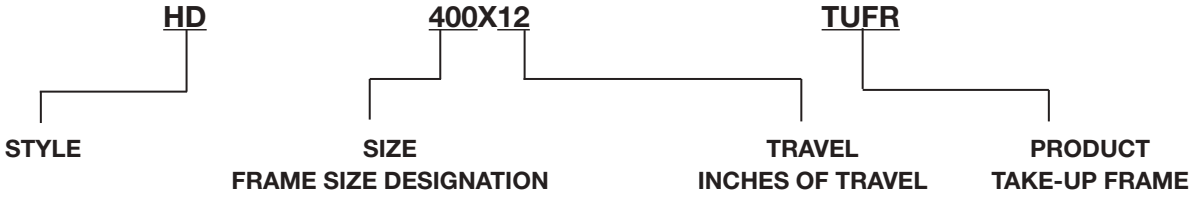

CP	Center Pull Wide Slot Take-Up Frame
WS	Wide Slot Ball Bearing Take-Up Frame
WSEZ	Ultra Kleen Wide Slot Ball Bearing Take-Up Frame
NS	Narrow Slot Ball Bearing Take-Up Frame
LD	Light Duty Protected Screw Take-Up Frame
TU	Take-Up
HD	Heavy Duty Protected Screw Take-Up Frame
TP	Top Angle Take-Up Frame
TPHU	Top Angle Heavy Duty Universal Take-Up Frame
TS	Telescoping Take-Up Frame
TUA	Type A Babbitted Take-Up Bearing
TUB	Type B Babbitted Take-Up Bearing
BOTU	BRONZOIL Take-Up
FR	Frame
SSS	Stainless Steel Screw

TU = Take-Up When Used As An Abbreviation Through This Section

SELECTION/DIMENSIONS

Take-Up Frames -NS

NARROW SLOT BALL BEARING TAKE-UP FRAMES

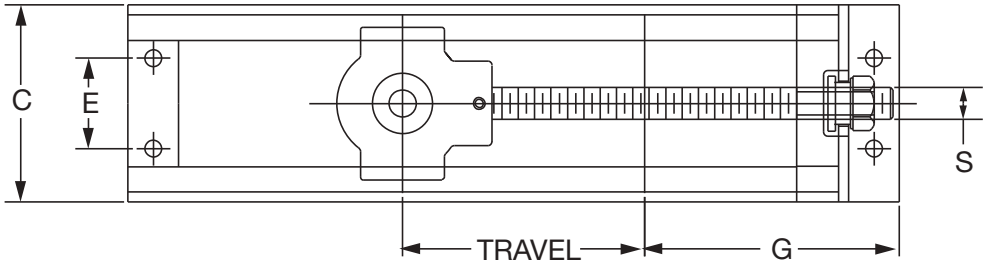

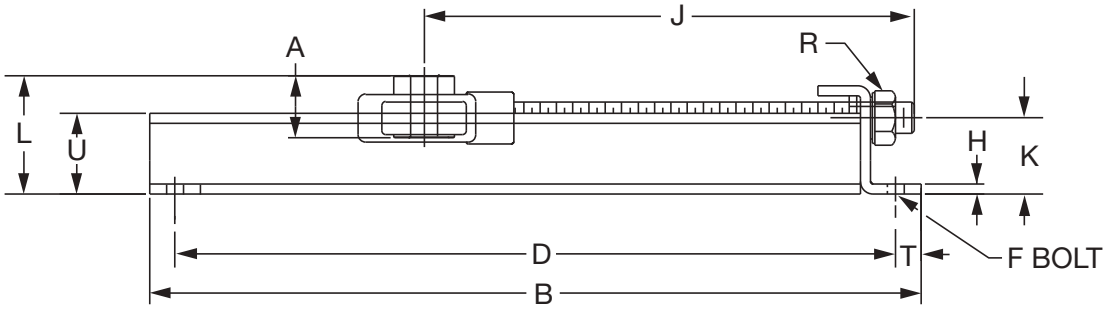

Frame Description	Part No.	Wt. (Lbs.)	A	B	C	D	E	F Base Bolt No.	F Base Bolt Dia.	G
NS-210x6-TUFR	**038109**	5.5	See page B19-10 for list of reference pages for Take-Up Bearings	13-5/8	3-13/16	12-1/8	1-5/8	4	1/2	4-7/8
NS-308x6-TUFR	**038110**	5.8		13-5/8	4-11/16	12-1/8	2-1/4	4	1/2	5-3/8
NS-308x12-TUFR	**038111**	8.0		19-5/8		18-1/8				
NS-400x6-TUFR	**038112**	9.2		14-9/16	6-1/16	13-1/16	2-1/2	4	1/2	6
NS-400x9-TUFR	**038113**	11.3		18-5/8		17-1/8				
NS-400x12-TUFR	**038114**	12.5		20-9/16		19-1/16				
NS-400x18-TUFR	**038115**	16.3		27-5/8		26-1/8				
NS-407x9-TUFR	**038116**	13.1		19-1/8	6-1/2	17-3/8	2-3/4	4	5/8	7-1/8
NS-407x18-TUFR	**038117**	18.6		28-1/8		26-3/8				
NS-415x9-TUFR	**038118**	15.5		19-1/8	7	17-3/8	3	4	5/8	7-3/8
NS-415x18-TUFR	**038119**	19.0		28-1/8		26-3/8				

Frame Description	H	J	K	L	R Hex	S	T	U	Channel
NS-210x6-TUFR	1/4	11-1/32	1-13/32	See Table on Page B19-9 for "L" Dim.	1-5/16	3/4-10	3/4	1-1/2	1-1/2 x 9/16 x 3/16
NS-308x6-TUFR	1/4	10-13/16	1-13/32		1-5/16	3/4-10	3/4	1-1/2	1-1/2 x 9/16 x 3/16
NS-308x12-TUFR		16-13/16							
NS-400x6-TUFR	1/4	11-1/16	1-7/8		1-1/2	7/8-9	3/4	2	2 x 1 x 3/16
NS-400x9-TUFR		14-1/16							
NS-400x12-TUFR		17-1/16							
NS-400x18-TUFR		23-1/16							
NS-407x9-TUFR	5/16	15-19/32	1-7/8		1-5/8	1-8	1	2	2 x 1 x 3/16
NS-407x18-TUFR		24-19/32							
NS-415x9-TUFR	5/16	15-27/32	1-7/8		1-5/8	1-8	1	2	2 x 1 x 3/16
NS-415x18-TUFR		24-27/32							

FEATURES/BENEFITS PAGE B19-2 | HOW TO ORDER/NOMENCLATURE PAGE B19-7 | SELECTION/DIMENSIONS PAGE B19-8



Take-Up Frames - Narrow Slot Frame
L DIMENSION

Series	Shaft Size	Take Up Frame No. Ref.	L					
			SC	VSC	SXR	SXV	DL	GT
204	1/2 5/8 3/4	NS-210	2.11	2.11	2.43	2.30	2.16	2.40
205	7/8 15/16 1	NS-210	2.16	2.16	2.44	2.30	2.26	2.36
206	1-1/16 1-1/8 1-3/16 1-1/4	NS-308	2.32	2.32	2.57	2.43	2.36	2.97
207	1-1/4 1-5/16 1-3/8 1-7/16	NS-308	2.42	2.42	2.66	2.54	2.46	2.46
208	1-1/2 1-5/8	NS-400	3.03	3.03	3.21	3.12	3.10	3.07
209	1-5/8 1-11/16 1-3/4	NS-400	3.03	3.03	3.22	3.10	3.10	3.07
210	1-15/16 2	NS-400	3.03	3.03	3.34	3.10	3.10	3.07
211	2 2-3/16 2-1/4	NS-407	3.19	3.19	3.55	3.13	3.21	3.10
212	2-1/4 2-7/16	NS-415	3.26	N/A	3.68	N/A	3.32	3.23

Series	Shaft Size	Take Up Frame No. Ref.	L		
			SCM	DLM	GTM
206	1	NS-308	2.32	2.36	2.47
207	1-3/16 1-1/4	NS-308	2.42	2.46	2.46
208	1-7/16	NS-400	3.03	3.10	3.07
209	1-1/2 1-5/8	NS-400	3.03	3.10	3.07
210	1-11/16 1-3/4	NS-400	3.03	3.10	3.07
211	1-15/16 2	NS-407	3.19	3.21	3.10
212	2-3/16 2-1/4	NS-415	3.26	3.32	3.23

Plummer Blocks
Sleeve Bearings
SLEEVOIL
Take-Up Frames
Engineering
Part Number Index
Keyword Index

SELECTION/DIMENSIONS



Narrow Slot (NS) Take-Up Frame Bearings

NORMAL DUTY
SETSCREW - SC, VSC
D-LOK - DL
ECCENTRIC LOCK - SXR, SXV
GRIP TIGHT - GT

Series	Shaft Size	Frame Size
204	1/2 5/8 3/4 20mm	NS-210
205	7/8 15/16 1 25mm	NS-210
206	1-1/16 1-1/8 1-3/16 1-1/4 30mm	NS-308
207	1-1/4 1-5/16 1-3/8 1-7/16 35mm	NS-308
208	1-1/2 1-5/8 40mm	NS-400
209	1-5/8 1-11/16 1-3/4 45mm	NS-400
210	1-15/16 2 50mm	NS-400
211	2 2-3/16 2-1/4 55mm	NS-407
212	2-1/4 2-7/16 60mm	NS-415

- Narrow Slot Take-Up Frames Are Not Supplied With Bearings. First Match The Take-Up Frame With The Bearing Size From This Page. Then Turn To The Page Listed For The Specific Bearing Part Number.
- Ultra Kleen (SC) - B1-32 to B1-33
- E-Z Kleen (SC) - B2-38
- Extreme Duty (SC) - B3-25 to B3-29
- Setscrew (SC, SCM & VSC) - B4-70 to B4-73
- Grip Tight (GT and GTM) - B5-50 to B5-53
- D-LOK (DL and DLM) - B6-42 to B6-45
- Eccentric Lock (SXR and SXV) - B7-32 to B7-33
- See B19-8 For Narrow Slot Take-Up Frame Travel Options And Part Numbers

MEDIUM DUTY
SETSCREW - SCM
D-LOK - DLM
GRIP TIGHT - GTM

Series	Shaft Size	Frame Size
206	1 25mm	NS-308
207	1-3/16 1-1/4 30mm	NS-308
208	1-7/16 35mm	NS-400
209	1-1/2 40mm	NS-400
210	1-11/16 1-3/4 45mm	NS-400
211	1-15/16 2 50mm	NS-407
212	2-3/16 2-1/4 55mm	NS-415



Take-Up Frames - WS

WIDE SLOT BALL BEARING TAKE-UP FRAMES

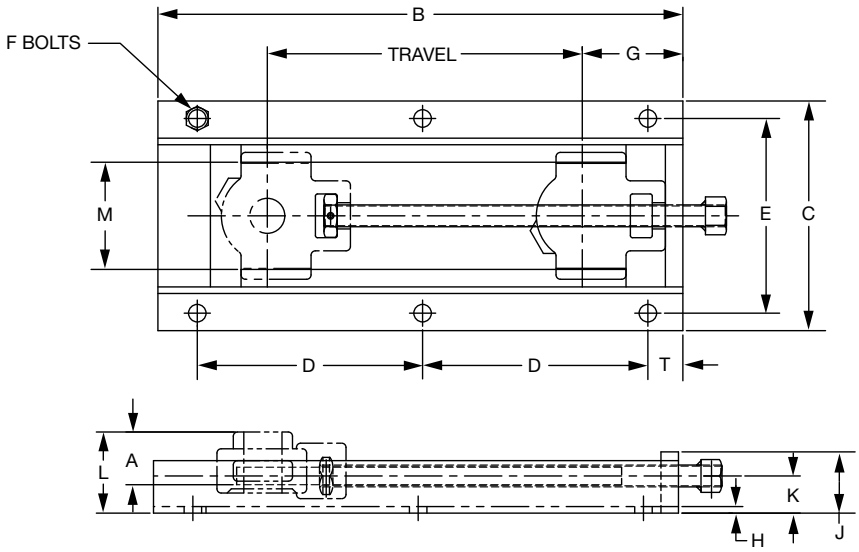

Frame Description	Part No.	Wt.	A	B	C	D	E	F		G	H	J	K	M	S Screw Dia.	T
								No.	Dia.							
WS-300X1-1/2-TUFR	**038200**	4.8	See chart on page B19-14 for list of reference pages for Take-Up Bearings	7-1/2	6-9/16	5-3/8	5-9/16	4	7/16	2-15/16	3/16	1-3/4	1-1/16	3-1/16	5/8	1
WS-300X3-TUFR	**038201**	5.5		9		6-7/8		4								
WS-300X6-TUFR	**038202**	7		12		4-15/16		6								
WS-300X9-TUFR	**038203**	8.5		15		6-7/16		6								
WS-300X12-TUFR	**038204**	10		18		7-15/16		6								
WS-308X3-TUFR	**038205**	7.5		9-1/8	7-1/16	6-7/16	6-1/16	4	7/16	3-11/16	3/16	2	1-1/4	3-9/16	3/4	1
WS-308X6-TUFR	**038206**	9		12-1/8		9-7/16		4								
WS-308X9-TUFR	**038207**	10.5		15-1/8		6-7/32		6								
WS-308X12-TUFR	**038208**	12		18-1/8		7-23/32		6								
WS-308X18-TUFR	**038209**	15		24-1/8		10-23/32		6								
WS-400X3-TUFR	**038210**	11.5	See Table on Page B19-13 for "L" Dim.	10-3/4	8-13/16	8-1/2	7-5/16	4	1/2	4-5/16	3/16	2-1/4	1-7/16	4-1/16	1	1-1/8
WS-400X6-TUFR	**038211**	14		13-3/4		11-1/2		4								
WS-400X9-TUFR	**038212**	16.5		16-3/4		7-1/4		6								
WS-400X12-TUFR	**038213**	19		19-3/4		8-3/4		6								
WS-400X18-TUFR	**038214**	24		25-3/4		11-3/4		6								
WS-502X6-TUFR	**038215**	20		14-3/4	10-7/16	12-1/2	8-5/8	4	9/16	5-11/16	3/16	2-1/2	1-1/2	5-3/16	1-1/4	1-1/8
WS-502X9-TUFR	**038216**	23.5		17-3/4		15-1/2		4								
WS-502X12-TUFR	**038217**	27		20-3/4		9-1/4		6								
WS-502X15-TUFR	**038218**	30.5		23-3/4		10-3/4		6								
WS-502X18-TUFR	**038219**	34		26-3/4		12-1/4		6								
WS-502X24-TUFR	**038220**	41		32-3/4		15-1/4		6								
WS-515X9-TUFR	**038221**	36		20-7/8	12	17-1/2	10-1/4	4	5/8	6-1/2	1/4	3	2	6	1-1/2	2-1/2
WS-515X12-TUFR	**038222**	41		23-7/8		10-1/4		6								
WS-515X18-TUFR	**038223**	51		29-7/8		13-1/4		6								
WS-515X24-TUFR	**038224**	61		35-7/8		16-1/4		6								
WS-515X30-TUFR	**038225**	71		41-7/8		19-1/4		6								
WS-608X12-TUFR	**038226**	41		23-7/8	12-9/16	10-1/4	10-13/16	6	5/8	6-1/2	1/4	3	2	6-9/16	1-1/2	2-1/2
WS-608X18-TUFR	**038227**	51		29-7/8		13-1/4		6								
WS-608X24-TUFR	**038228**	61		35-7/8		16-1/4		6								
WS-608X30-TUFR	**038229**	71		41-7/8		19-1/4		6								

FEATURES/BENEFITS PAGE B19-2	HOW TO ORDER/NOMENCLATURE PAGE B19-7	SELECTION/DIMENSIONS PAGE B19-8

SELECTION/DIMENSIONS

Take-Up Frames - WS

ULTRA KLEEN (Stainless Steel) WIDE SLOT BALL BEARING TAKE-UP FRAME

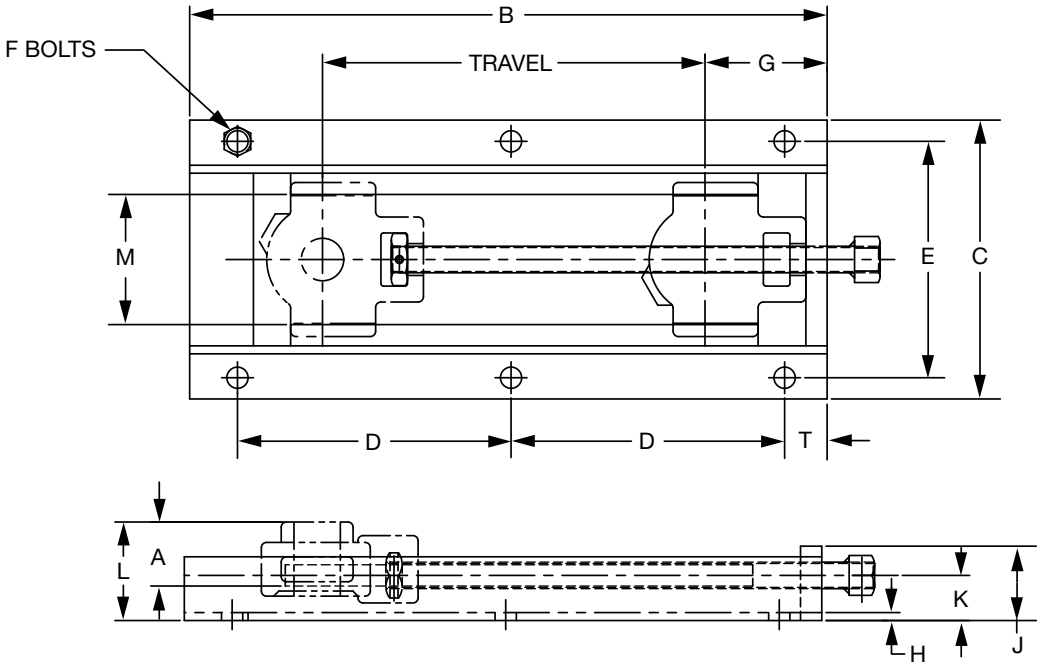

Frame Description	Part No.	Wt.	A	B	C	D	E	F No.	F Dia.	G	H	J	K	M	S Screw Dia.	T
WSEZ-300X3-TUFR-SSS	**038070**	6	See page B2-66 to B2-71 for E-Z KLEEN Wide Slot Take-Up Bearings	9	6-9/16	6-7/8	5-9/16	4	1/2	2-15/16	3/16	1-3/4	1-1/16	3-1/16	5/8	1
WSEZ-300X6-TUFR-SSS	**038071**	7.9		12		4-15/16		6								
WSEZ-300X9-TUFR-SSS	**038072**	9.8		15		6-7/16		6								
WSEZ-300X12-TUFR-SSS	**038073**	11.7		18		7-15/16		6								
WSEZ-308X3-TUFR-SSS	**038074**	7.3		9-1/8	7-1/16	6-7/16	6-1/16	4	1/2	3-11/16	3/16	2	1-1/4	3-9/16	3/4	1
WSEZ-308X6-TUFR-SSS	**038075**	9.4		12-1/8		9-7/16		4								
WSEZ-308X9-TUFR-SSS	**038076**	11.4		15-1/8		6-7/32		6								
WSEZ-308X12-TUFR-SSS	**038077**	13.4		18-1/8		7-23/32		6								
WSEZ-308X18-TUFR-SSS	**038078**	17.4		24-1/8		10-23/32		6								
WSEZ-400X3-TUFR	**038060**	11.5	See Table on Page B19-13 for "L" Dim.	10-3/4	8-13/16	8-1/2	7-5/16	4	1/2	4-5/16	3/16	2-1/4	1-7/16	4-1/16	1	1-1/8
WSEZ-400X6-TUFR	**038061**	14		13-3/4		11-1/2		4								
WSEZ-400X9-TUFR	**038062**	16.5		16-3/4		7-1/4		6								
WSEZ-400X12-TUFR	**038063**	19		19-3/4		8-3/4		6								
WSEZ-400X18-TUFR	**038064**	24		25-3/4		11-3/4		6								

See table on page B19-13 for "L" dimension.



Take-Up Frames - Wide Slot Frame
L DIMENSION

Series	Shaft Size	Take Up Frame No. Ref.	L				
			VSC SC	SXR	SXV	DL	GT
204	1/2 5/8 3/4	WS-300	1.79	2.11	1.98	1.84	2.08
205	7/8 15/16 1	WS-300	1.84	2.12	1.98	1.94	2.04
206	1-1/16 1-1/8 1-3/16 1-1/4	WS-308	2.19	2.44	2.30	2.23	2.34
207	1-1/4 1-5/16 1-3/8 1-7/16	WS-308	2.29	2.53	2.41	2.33	2.33
208	1-1/2 1-5/8	WS-400	2.63	2.81	2.72	2.70	2.67
209	1-5/8 1-11/16 1-3/4	WS-400	2.63	2.786	2.70	2.70	3.67
210	1-15/16 2	WS-400	2.63	2.94	2.70	2.70	2.67
211	2 2-3/16 2-1/4	WS-502	2.85	3.21	2.79	2.87	2.76
212	2-1/4 2-7/16	WS-502	2.91	3.34	N/A	2.98	2.89
214	2-1/2 2-11/16	WS-515	3.48	N/A	N/A	3.54	3.55
215	2-15/16	WS-515	3.47	4.16	N/A	3.58	3.60

Series	Shaft Size	Take Up Frame No. Ref.	L		
			SCM	DLM	GTM
206	1	WS-308	2.19	2.23	2.34
207	1-3/16 1-1/4	WS-308	2.29	2.33	2.33
208	1-7/16	WS-400	2.63	2.70	2.67
209	1-1/2	WS-400	2.63	2.70	2.67
210	1-11/16 1-3/4	WS-400	2.63	2.70	2.67
211	1-15/16 2	WS-502	2.85	2.87	2.76
212	2-3/16 2-1/4	WS-502	2.91	2.98	2.89
214	2-7/16 2-1/2	WS-515	3.48	3.54	3.55
215	2-11/16	WS-515	3.47	3.58	3.60
216	2-15/16 3	WS-608	3.50	3.74	3.81

FEATURES/BENEFITS PAGE B19-2 | HOW TO ORDER/NOMENCLATURE PAGE B19-7 | SELECTION/DIMENSIONS PAGE B19-8

SELECTION/DIMENSIONS



Wide Slot (WS) Take-Up Frame Bearings

NORMAL DUTY
SETSCREW - SC, VSC
D-LOK - DL
ECCENTRIC LOCK - SXR, SXV
GRIP TIGHT - GT

Series	Shaft Size	Frame Size
204	1/2 5/8 3/4 20mm	WS-300
205	7/8 15/16 1 25mm	WS-300
206	1-1/16 1-1/8 1-3/16 1-1/4 30mm	WS-308
207	1-1/4 1-5/16 1-3/8 1-7/16 35mm	WS-308
208	1-1/2 1-5/8 40mm	WS-400
209	1-5/8 1-11/16 1-3/4 45mm	WS-400
210	1-15/16 2 50mm	WS-400
211	2 2-3/16 2-1/4 55mm	WS-502
212	2-1/4 2-7/16 60mm	WS-502
214	2-1/2 2-11/16 70mm	WS-515
215	2-15/16 75mm	WS-515

- Wide Slot Take-Up Frames Are Not Supplied With Bearings. First Match The Take-Up Frame With The Bearing Size From This Page. Then Turn To The Page Listed For The Specific Bearing Part Number.
- Ultra Kleen (SC) - B1-28 to B1-31
- EZ-Kleen Polymer Housing - B2-66 to B2-71 and B2-39
- Extreme Duty (SC) - B3-30 to B3-37
- Setscrew (SC, SCM & VSC) - B4-74 to B4-81
- Grip Tight (GT & GTM) - B5-54 to B5-59
- D-LOK (DL and DLM) - B6-46 to B6-49
- Eccentric Lock (SXR and SXV) - B7-34 to B7-35
- See B19-11 For Wide Slot Take-Up Frame Travel Options And Part Numbers

MEDIUM DUTY
SETSCREW - SCM, VSC
D-LOK - DLM
GRIP TIGHT - GTM

Series	Shaft Size	Frame Size
206	1 25mm	WS-308
207	1-3/16 1-1/4 30mm	WS-308
208	1-7/16 35mm	WS-400
209	1-1/2 40mm	WS-400
210	1-11/16 1-3/4 45mm	WS-400
211	1-15/16 2 50mm	WS-502
212	2-3/16 2-1/4 55mm	WS-502
214	2-7/16 2-1/2	WS-515
215	2-11/16 70mm	WS-515
216	2-15/16 3 75mm	WS-608



Telescoping (TS) Take-Up Frame

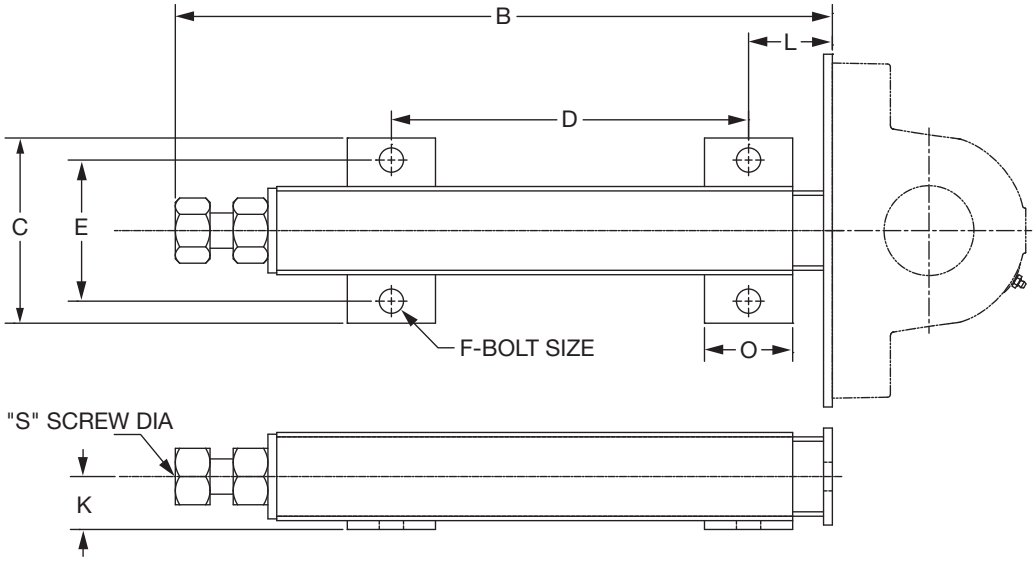

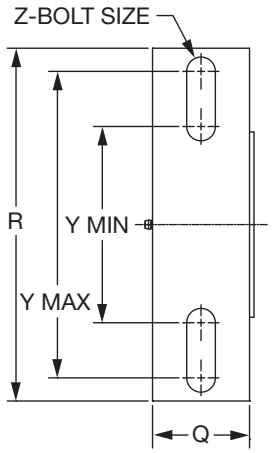

Frame Size	Travel	Part No.	Wt. (lbs.)	B	C	D		E	F Bolt Dia.	K	L	O	Q	R	S Scr. Dia.	Y		Z Bolt Dia.
						Min.	Max.									Min.	Max.	
TS-100	3	**089782**	3	7.94	3.69	3.56	-	2.63	1/2	0.88	1.50	1.50	1.50	6.38	5/8	2.94	5.44	1/2
TS-100	6	**089783**	4	11.44	3.69	7.06	-	2.63	1/2	0.88	1.50	1.50	1.50	6.38	5/8	2.94	5.44	1/2
TS-100	9	**089784**	5	15.44	3.69	11.06	-	2.63	1/2	0.88	1.50	1.50	1.50	6.38	5/8	2.94	5.44	1/2
TS-250	3	**089785**	5	9.75	4.00	4.38	-	3.00	1/2	1.13	1.88	2.00	2.00	7.00	3/4	3.81	5.69	5/8
TS-250	6	**089786**	7	12.75	4.00	7.38	-	3.00	1/2	1.13	1.88	2.00	2.00	7.00	3/4	3.81	5.69	5/8
TS-250	9	**089787**	8	15.75	4.00	10.38	-	3.00	1/2	1.13	1.88	2.00	2.00	7.00	3/4	3.81	5.69	5/8
TS-250	12	**089788**	9	18.75	4.00	13.38	-	3.00	1/2	1.13	1.88	2.00	2.00	7.00	3/4	3.81	5.69	5/8
TS-300	6	**089789**	16	15.63	5.25	6.13	-	4.00	5/8	1.50	2.38	2.50	2.75	10.00	1	5.56	8.69	3/4
TS-300	9	**089790**	18	18.63	5.25	10.13	-	4.00	5/8	1.50	2.38	2.50	2.75	10.00	1	5.56	8.69	3/4
TS-300	12	**089791**	21	21.63	5.25	14.13	-	4.00	5/8	1.50	2.38	2.50	2.75	10.00	1	5.56	8.69	3/4
TS-300	18	**089792**	26	27.63	5.25	21.13	-	4.00	5/8	1.50	2.38	2.50	2.75	10.00	1	5.56	8.69	3/4
TS-350	9	**089793**	24	19.56	5.75	12.63	13.00	4.50	5/8	1.75	2.50	2.50	3.00	12.00	1	5.56	9.75	3/4
TS-350	12	**089794**	28	22.56	5.75	15.63	16.00	4.50	5/8	1.75	2.50	2.50	3.00	12.00	1	5.56	9.75	3/4
TS-350	18	**089795**	35	28.56	5.75	21.63	22.00	4.50	5/8	1.75	2.50	2.50	3.00	12.00	1	5.56	9.75	3/4
TS-350	24	**089796**	43	34.56	5.75	27.63	28.00	4.50	5/8	1.75	2.50	2.50	3.00	12.00	1	5.56	9.75	3/4
TS-400	12	**089797**	50	29.75	7.50	20.00	-	5.50	3/4	2.13	3.50	3.50	3.50	14.00	1-1/2	8.50	11.75	7/8
TS-400	18	**089798**	60	35.75	7.50	26.00	-	5.50	3/4	2.13	3.50	3.50	3.50	14.00	1-1/2	8.50	11.75	7/8
TS-400	24	**089799**	70	41.75	7.50	32.00	-	5.50	3/4	2.13	3.50	3.50	3.50	14.00	1-1/2	8.50	11.75	7/8
TS-400	36	**089800**	90	53.75	7.50	44.00	-	5.50	3/4	2.13	3.50	3.50	3.50	14.00	1-1/2	8.50	11.75	7/8
TS-400	48	**089801**	110	65.75	7.50	56.00	-	5.50	3/4	2.13	3.50	3.50	3.50	14.00	1-1/2	8.50	11.75	7/8
TS-500	18	**089802**	210	43.88	11.50	31.00	-	9.00	1	3.50	3.88	3.88	7.00	20.00	2	Drilled to Order	Drilled to Order	Drilled to Order
TS-500	24	**089803**	240	49.88	11.50	37.00	-	9.00	1	3.50	3.88	3.88	7.00	20.00	2			
TS-500	36	**089804**	290	61.88	11.50	49.00	-	9.00	1	3.50	3.88	3.88	7.00	20.00	2			

Dimensions in inches

FEATURES/BENEFITS PAGE B19-2	HOW TO ORDER/NOMENCLATURE PAGE B19-7	SELECTION/DIMENSIONS PAGE B19-8

SELECTION/DIMENSIONS



Telescoping (TS) Take-Up Frame Bearings

NORMAL DUTY
SETSCREW - SC, VSC
D-LOK - DL
ECCENTRIC LOCK - SXR, SXV
GRIP TIGHT - GT

Series	Shaft Size	Frame Size
204	1/2 5/8 3/4 20mm	TS-100
205	7/8 15/16 1 25mm	TS-100
206	1-1/16 1-1/8 1-3/16 1-1/4 30mm	TS-250
207	1-1/4 1-5/16 1-3/8 1-7/16 35mm	TS-250
208	1-1/2 1-5/8 40mm	TS-250
209	1-5/8 1-11/16 1-3/4 45mm	TS-250
210	1-15/16 2 50mm	TS-300
211	2 2-3/16 2-1/4 55mm	TS-300
212	2-1/4 2-7/16 60mm	TS-300
214	2-1/2 2-11/16 70mm	TS-300
215	2-15/16 75mm	TS-350 or TS-400

- Telescoping Take-Up Frames Are Not Supplied With Bearings. First Match The Take-Up Frame With The Bearing Size From This Page. Then Turn To The Page Listed For The Specific Bearing Part Number.
- EZ-KLEEN Polymer Housing - B2-66 to B2-71
- Grip Tight (GT & GTM) - B5-54 to B5-59
- Setscrew (SC, SCM & VSC) - B8-20 to B8-23
- Eccentric Lock (SXR and SXV) - B7-34 to B7-35
- D-LOK (DL and DLM) - B6-46 to B6-49
- See B19-15 For Telescoping (TS) Take-Up Frame Travel Options And Part Numbers

MEDIUM DUTY
SETSCREW - SCM, VSC
D-LOK - DLM
GRIP TIGHT - GTM

Series	Shaft Size	Frame Size
206	1 25mm	TS-250
207	1-3/16 1-1/4 30mm	TS-250
208	1-7/16 35mm	TS-250
209	1-1/2 40mm	TS-250
210	1-11/16 1-3/4 45mm	TS-300
211	1-15/16 2 50mm	TS-300
212	2-3/16 2-1/4 55mm	TS-300
214	2-7/16 2-1/2	TS-300
215	2-11/16 70mm	TS-350
216	2-15/16 3 75mm	TS-350 or TS-400



Telescoping (TS) Take-Up Frame Bearings

TAPERED ROLLER BEARINGS

Type E

Shaft Size	Frame Size
1-3/16 to 1-1/4	TS-250
1-3/8 to 2-3/16	TS-300
1-1/2 to 2-3/16	TS-300
2-1/4 to 2-1/2	TS-350
2-11/16 to 3	TS-400
3-3/16 to 3-1/2	TS-400
3-15/16 to 5	TS-500

Type K Double Interlock

Shaft Size	Frame Size
1-1/2 to 2-3/16	TS-300
2-1/4 to 2-1/2	TS-350
2-11/16 to 3	TS-400
3-3/16 to 3-1/2	TS-500
3-15/16 to 4-1/2	TS-500
4-15/16 to 5	TS-500

TAF

Shaft Size	Frame Size
2-7/16 to 2-1/2	TS-400
2-15/16 to 3	TS-400
3-7/16 to 4	TS-500
4-7/16 to 5	TS-500

- Type K - B10-40
- Type E - B10-22
- DOUBLE INTERLOCK - B10-50
- TAF - B10-58
- See B19-15 For Telescoping (TS) Take-Up Frame Travel Options and Part Numbers

SELECTION/DIMENSIONS



Telescoping (TS) Take-Up Frame Bearings

UNITIZED SPHERICAL ROLLER BEARINGS

Imperial - IP

Shaft Size	Frame Size
1-1/8 to 1-1/2	TS-250
1-5/8 to 2-1/4	TS-300
2-3/8 to 2-1/2	TS-350
2-11/16 2-3/4 2-15/16 3	TS-350
3-3/16 3-1/4 3-7/16 3-1/2	TS-400
3-11/16 3-15/16 4 4-7/16 4-1/2	TS-500
4-15/16 5	TS-500

S-2000

Shaft Size	Frame Size
1-3/8 1-7/16 1-1/2	TS-250
1-11/16 1-3/4 1-15/16 2 2-3/16	TS-300
2-7/16	TS-350
2-11/16	TS-350
2-15/16 3	TS-350
3-7/16	TS-400
3-15/16 4-7/16	TS-500
4-15/16	TS-500

UNISPHERE II

Shaft Size	Frame Size
1-7/16 1-1/2 1-11/16 1-3/4	
1-15/16 2 2-3/16 2-7/16 2-1/2	TS-300
2-11/16 2-3/4 2-15/16 3	TS-350
3-7/16 3-1/2	TS-400
3-15/16 4	TS-400 or TS-500

IMPERIAL & S2000 With Type E Dimensions

Shaft Size	Frame Size
1-3/16 to 1-1/4	TS-250
1-3/8 to 2-3/16	TS-300
2-1/4 to 2-1/2	TS-350
2-11/16 to 3	TS-400
3-3/16 to 3-1/2	TS-400
3-15/16 to 5	TS-500

- S-2000 - B12-14 to B12-25
- IMPERIAL - B14-30 to B14-37
- UNISPHERE - B13-12 to B3-13
- See B19-15 For Telescoping (TS) Take-Up Frame Travel Options and Part Numbers



Telescoping (TS) Take-Up Frame Bearings

UNIFIED SPHERICAL ROLLER BEARINGS

USAF-500
SAF-XT
SAFS
ISAF

Shaft Size	Frame Size
1-15/16	TS-300 or TS-350
2-3/16	TS-400
2-7/16 to 3	TS-400
3-3/16	TS-500
3-7/16 to 3-1/2	TS-500
3-15/16 to 4-1/2	TS-500
4-15/16	TS-500

- IMPERIAL - B14-52 to B14-57
- USAF-500 - B15-78 to B15-81
- SAF-XT - B15-64 to B15-74
- SAFS - B15-61 to B15-63
- See B19-15 For Telescoping (TS) Take-Up Frame Travel Options and Part Numbers

SELECTION/DIMENSIONS

Take-Up Frames - TP

TOP ANGLE PROTECTED SCREW TAKE-UP FRAMES

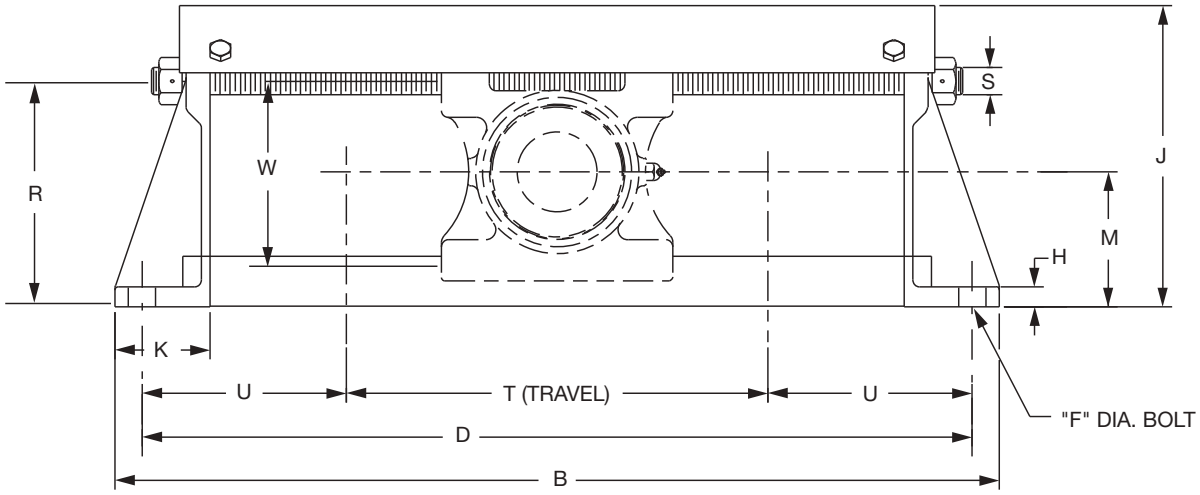

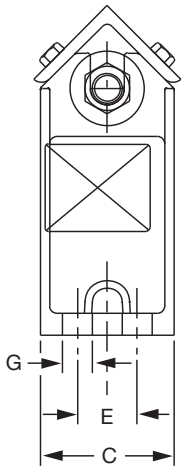



Take-Up Frames - TP

TOP ANGLE PROTECTED SCREW TAKE-UP FRAMES

Frame Size	Nominal Travel	Part No.	Wt.	B	C	D	E	F Bolt Dia.	G	H
TP10	12	**036350**	32	28-1/2	3-1/2	26-1/2	-	5/8	1	3/4
	18	**036351**	36	34-1/2		32-1/2				
	24	**036352**	41	40-1/2		38-1/2				
TP20	12	**036353**	34	29-1/2	3-1/2	27-1/2	-	5/8	1	3/4
	18	**036354**	39	35-1/2		33-1/2				
	24	**036355**	43	41-1/2		39-1/2				
TP30	12	**036356**	47	30-1/2	4	28-1/2	-	3/4	1-5/16	3/4
	18	**036357**	54	36-1/2		34-1/2				
	24	**036358**	60	42-1/2		40-1/2				
TP40	12	**036359**	52	32-1/2	4-1/2	30-1/2	2	5/8	1	3/4
	18	**036360**	60	38-1/2		36-1/2				
	24	**036361**	66	44-1/2		42-1/2				
TP50	12	**036362**	63	34-1/2	4-1/2	32	2	3/4	1	3/4
	18	**036363**	70	40-1/2		38				
	24	**036364**	79	46-1/2		44				
TP60	12	**036365**	84	38-1/2	5-1/2	36	2-1/2	3/4	1	3/4
	18	**036366**	92	44-1/2		42				
	24	**036367**	102	50-1/2		48				

Frame Size	Nominal Travel	Part No.	J	K	M	R	S Screw Dia.	T	U	W
TP10	12	**036350**	8-1/2	3	3-15/16	6-11/32	3/4	14-1/2	6	5-5/32
	18	**036351**		3				20-1/2		
	24	**036352**		3				26-1/2		
TP20	12	**036353**	9-1/8	3	4-3/16	6-31/32	3/4	15	6-1/4	5-25/32
	18	**036354**		3				21		
	24	**036355**		3				27		
TP30	12	**036356**	10-1/8	3-1/2	4-3/8	7-3/8	1	14-1/2	7	6-3/16
	18	**036357**		3-1/2				20-1/2		
	24	**036358**		3-1/2				26-1/2		
TP40	12	**036359**	11-1/16	3-1/2	4-15/16	8-3/8	1	15-1/2	7-1/2	7-3/16
	18	**036360**		3-1/2				21-1/2		
	24	**036361**		3-1/2				27-1/2		
TP50	12	**036362**	12-1/2	4	5-7/16	9-13/32	1-1/4	15	8-1/2	8-7/32
	18	**036363**		4				21		
	24	**036364**		4				27		
TP60	12	**036365**	14-1/4	4-1/2	7	11-11/32	1-1/4	16-1/2	9-5/8	8-29/32
	18	**036366**		4-1/2				22-1/2		
	24	**036367**		4-1/2				28-1/2		

FEATURES/BENEFITS PAGE B19-2 | HOW TO ORDER/NOMENCLATURE PAGE B19-7 | SELECTION/DIMENSIONS PAGE B19-8

SELECTION/DIMENSIONS



Top Angle (TP) Take-Up Frame Bearings

BALL BEARINGS

NORMAL DUTY
SETSCREW - G
D-LOK - DL
ECCENTRIC LOCK - GXR
GRIP TIGHT-GT

Series	Shaft Size	Frame Size
210	1-15/16 2	TP-10
211	2-3/16 2-1/4	TP-20
212	2-7/16	TP-30
215	2-15/16	TP-40

- Top Angle Take-Up Frames Are Not Supplied With Bearings. First Match The Take-Up Frame With The Bearing Size From This Page. Then Turn To The Page Listed For The Specific Bearing Part Number.
- Grip Tight (GT & GTM) -B5-60 to B5-61
- Setscrew (G, & GM) - B4-80 to B4-81
- Eccentric Lock (GXR) - B7-36
- D-LOK (DL and DLM) - B6-50 to B6-51
- See B19-21 For Top Angle Take-Up Frame Travel Options And Part Numbers.

MEDIUM DUTY
SETSCREW - GM
D-LOK - DLM
GRIP TIGHT - GTM

Series	Shaft Size	Frame Size
210	1-11/16 1-3/4	TP-10
211	1-15/16 2	TP-20
212	2-3/16 2-1/4	TP-30
214	2-7/16 2-1/2	TP-40
215	2-11/16	TP-40
216	2-15/16 3	TP-50
218	3-7/16 3-1/2	TP-60

TAPERED ROLLER BEARINGS

TYPE E

Shaft Size	Frame Size
1-3/4 1-7/8 1-15/16 2	TP-10
2-3/16	TP-20
2-1/4 2-7/16 2-1/2	TP-30
2-11/16 2-3/4 2-15/16 3	TP-40
3-3/16 3-1/4 3-7/16 3-1/2	TP-50
3-15/16 4	TP-60

- Top Angle Take-Up Frames Are Not Supplied With Bearings. First Match The Take-Up Frame With The Bearing Size From This Page. Then Turn To The Page Listed For The Specific Bearing Part Number.
- Type E - B10-73
- Type K - B10-48
- See B19-21 For Top Angle Take-Up Frame Travel Options And Part Numbers.

TYPE K

Shaft Size	Frame Size
1-3/4 1-15/16 2	TP-10
2-3/16	TP-20
2-1/4 2-7/16 2-1/2	TP-30
2-11/16 2-3/4 2-15/16 3	TP-40
3-3/16 3-7/16 3-1/2	TP-50
3-15/16	TP-60



Top Angle (TP) Take-Up Frame Bearings

SPHERICAL ROLLER BEARINGS

S-2000

Shaft Size	Frame Size
1-15/16 2	TP-10
2-3/16	TP-30
2-7/16	TP-40
2-11/16 2-15/16 3	TP-40
3-7/16	TP-50
3-15/16	TP-60

- Top Angle Take-Up Frames Are Not Supplied With Bearings. First Match The Take-Up Frame With The Bearing Size From This Page. Then Turn To The Page Listed For The Specific Bearing Part Number.
- S-2000- B12-10
- See B19-21 For Top Angle Take-Up Frame Travel Options And Part Numbers.

SLEEVE BEARINGS

SOLID LUBE BEARING

LT-700

LT-1000

Shaft Size	Frame Size
1-15/16 2	TP-10
2-3/16	TP-20
2-7/16 2-1/2	TP-30
2-15/16 3	TP-40

- Top Angle Take-Up Frames Are Not Supplied With Bearings. First Match The Take-Up Frame With The Bearing Size From This Page. Then Turn To The Page Listed For The Specific Bearing Part Number.
- SOLIDLUBE Sleeve Bearing (LT7 & LT10) - B17-10
- Type H Babbitted Bearing - B7-48
- See B19-21 For Top Angle Take-Up Frame Travel Options And Part Numbers.

BABBITTED BEARING

TYPE H

Shaft Size	Frame Size
1-15/16	TP-10
2-3/16	TP-10
2-7/16	TP-30
2-15/16	TP-30
3-7/16	TP-50
3-15/16	TP-50

Plummer Blocks
Sleeve Bearings
SLEEVOIL
Take-Up Frames
Engineering
Part Number Index
Keyword Index

SELECTION/DIMENSIONS

Take-Up Frames - TPHU

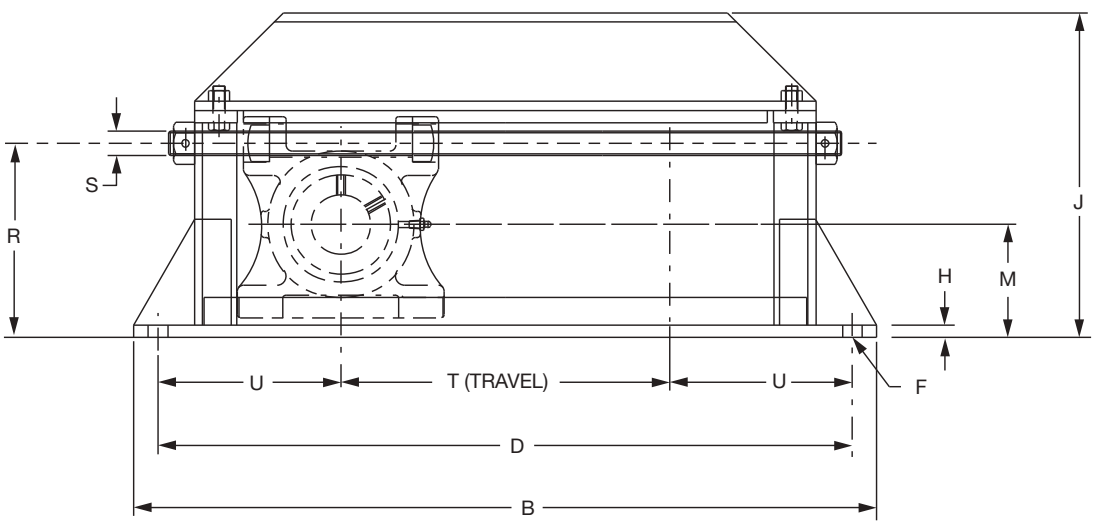

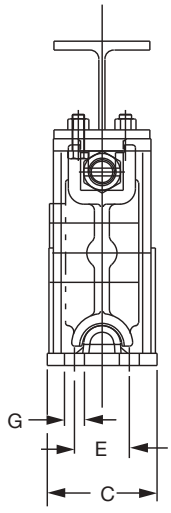

Shaft Size	Frame Size	Nom. Travel	Part No.	Wt.	B	C	D	E	F Bolt Dia	G
1-7/8		12	**013497**	58	29-1/2		27-1/2			
1-15/16	TPHU110	18	**013498**	70	35-1/2	3-1/2	33-1/2	-	5/8	11/16
2		24	**013499**	82	41-1/2		39-1/2			
		12	**013900**	71	29-1/2		27-1/2			
2-3/16 2-1/4	TPHU120	18	**013901**	85	35-1/2	4-1/2	33-1/2	-	5/8	11/16
		24	**013902**	99	41-1/2		39-1/2			
2-3/8		12	**013903**	73	30-1/2		28-1/2			
2-7/16	TPHU130	18	**013904**	86	36-1/2	4-1/2	34-1/2	-	3/4	13/16
2-1/2		24	**013905**	99	42-1/2		40-1/2			
		12	**013906**	80	32-1/2		30-1/2			
2-11/16		18	**013907**	93	38-1/2		36-1/2			
2-3/4	TPHU140	24	**013908**	106	44-1/2	4-1/2	42-1/2	2	5/8	11/16
2-15/16		30	**013909**	119	50-1/2		48-1/2			
3		36	**013910**	132	56-1/2		54-1/2			
		12	**013511**	91	34-1/4		32			
3-3/16		18	**013512**	105	40-1/4		38			
3-1/4	TPHU150	24	**013513**	119	46-1/4	4-1/2	44	2	3/4	13/16
3-7/16		30	**013514**	133	52-1/4		50			
3-1/2		36	**013515**	147	58-1/4		56			
		12	**013916**	132	38-1/2		36			
3-11/16		18	**013917**	150	44-1/2		42			
3-15/16	TPHU160	24	**013918**	168	50-1/2	5-1/2	48	2-1/2	3/4	13/16
4		30	**013519**	186	56-1/2		54			
		36	**013520**	204	62-1/2		60			

FEATURES/BENEFITS PAGE B19-2	HOW TO ORDER/NOMENCLATURE PAGE B19-7	SELECTION/DIMENSIONS PAGE B19-8



Take-Up Frames - TPHU

Shaft Size	Frame Size	Nom. Travel	Part No.	H	J	M	R	S Screw Dia.	T Max. Travel	U
1-7/8 1-15/16 2	TPHU110	12 18 24	**013497** **013498** **013499**	1/2	10-5/8	3-15/16	6-5/16	3/4	13-1/2 19-1/2 25-1/2	7-3/4
2-3/16 2-1/4	TPHU120	12 18 24	**013900** **013901** **013902**	1/2	11-1/4	4-7/16	7-7/16	1	13-1/2 19-1/2 25-1/2	7
2-3/8 2-7/16 2-1/2	TPHU130	12 18 24	**013903** **013904** **013905**	1/2	11-3/4	4-5/8	7-61/64	1	13-1/2 19-1/2 25-1/2	7-1/2
2-11/16 2-3/4 2-15/16 3	TPHU140	12 18 24 30 36	**013906** **013907** **013908** **013909** **013910**	3/4	12-5/16	5-1/8	8-1/2	1	15-1/2 21-1/2 27-1/2 33-1/2 39-1/2	7-1/2
3-3/16 3-1/4 3-7/16 3-1/2	TPHU150	12 18 24 30 36	**013511** **013512** **013513** **013514** **013515**	3/4	13-27/32	5-5/8	9-23/32	1-1/4	15-1/2 21-1/2 27-1/2 33-1/2 39-1/2	8-1/4
3-11/16 3-15/16 4	TPHU160	12 18 24 30 36	**013916** **013917** **013918** **013519** **013520**	1	17	7	11-5/8	1-1/4	16-1/2 22-1/2 28-1/2 34-1/2 40-1/2	9-3/4

SPHERICAL ROLLER BEARINGS

S-2000

Shaft Size	Frame Size
1-15/16 2	TPHU-110
2-3/16	TPHU-120
2-7/16	TPHU-130
2-11/16 2-15/16 3	TPHU-140
3-7/16	TPHU-150
3-15/16	TPHU-160

- TPHU Take-Up Frames Are Not Supplied With Bearings. First Match The Take-Up Frame With The Bearing Size From This Page. Then Turn To The Page Listed For The Specific Bearing Part Number.
- S-2000- B12-9
- See B19-24 and B19-25 For TPHU Take-Up Frame Travel Options And Part Numbers.

SELECTION/DIMENSIONS

Take-Up Frames - CP

CENTER PULL (CP)

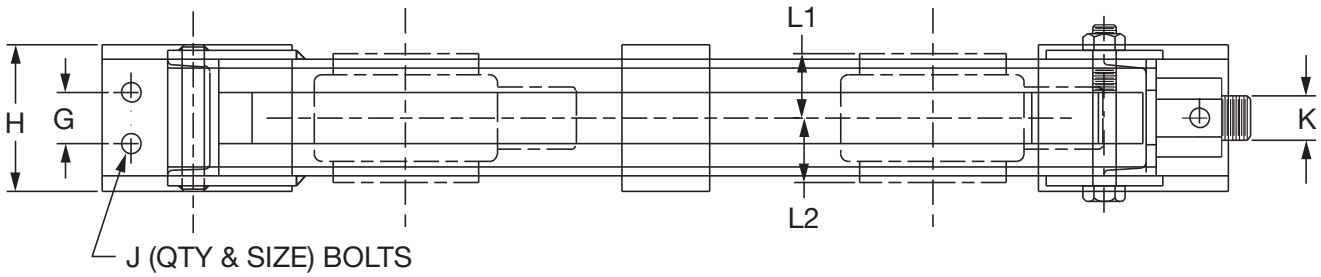

U.S. Patent No. 4,676,670

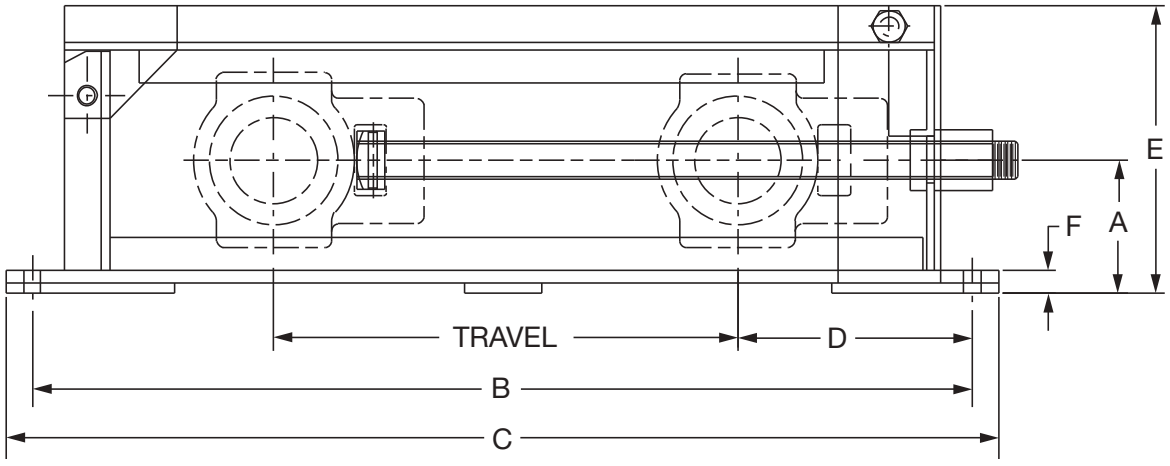

DODGE



Take-Up Frames - CP

CENTER PULL (CP)

Frame Size	Travel	Frame Part Number	Frame Weight	Travel Maximum S2 & IP	Travel Maximum Type E & K	A	B	C	D S2000 Imperial	D Type K & E	E	F	G	H	J Qty.	J Size Dia.	K	L1 & L2
CP308	12	**019200**	30	15-15/32	15-15/32	3-7/16	26	28	6	6	7	11/16	..	3	2	1/2	3/4-10NC	See Page B19-23
CP308	18	**019201**	34	21-15/32	21-15/32		32	64									3/4-10NC	
CP308	24	**019202**	38	27-15/32	27-15/32		38	40									3/4-10NC	
CP308	30	**019203**	42	33-15/32	33-15/32		44	46									3/4-10NC	
CP308	36	**019204**	46	39-15/32	39-15/32		50	52									3/4-10NC	
CP400	12	**019210**	55	14-27/32	14-23/32	3-15/16	27-1/2	29-1/2	7-1/4	7-1/4	8-5/8	13/16	..	4	2	5/8	1-8NC	
CP400	18	**019211**	65	20-27/32	20-23/32		33-1/2	35-1/2									1-8NC	
CP400	24	**019212**	75	26-27/32	26-23/32		39-1/2	41-1/2									1-8NC	
CP400	30	**019213**	85	32-27/32	32-23/32		45-1/2	47-1/2									1-8NC	
CP400	36	**019214**	95	38-27/32	38-23/32		51-1/2	53-1/2									1-8NC	
CP408	12	**019220**	61	14-5/32	14-3/32	4-7/16	27-1/2	29-1/2	7-3/4	7-3/4	9-1/4	11/16	..	4	2	5/8	1-1/8-7NC	
CP408	18	**019221**	71	20-5/32	20-3/32		33-1/2	35-1/2									1-1/8-7NC	
CP408	24	**019222**	81	26-5/32	26-3/32		39-1/2	41-1/2									1-1/8-7NC	
CP408	30	**019223**	85	32-5/32	32-3/32		45-1/2	47-1/2									1-1/8-7NC	
CP408	36	**019224**	95	38-5/32	38-3/32		51-1/2	53-1/2									1-1/8-7NC	
CP502	12	**019230**	65	14-13/32	12-31/32	4-3/8	28-1/2	30-1/2	8-1/4	9-9/16	9-1/2	13/16	..	4	2	3/4	1-1/4-7NC	
CP502	18	**019231**	75	20-13/32	18-31/32		34-1/2	36-1/2									1-1/4-7NC	
CP502	24	**019232**	85	26-13/32	24-31/32		40-1/2	42-1/2									1-1/4-7NC	
CP502	30	**019233**	95	32-13/32	30-31/32		46-1/2	48-1/2									1-1/4-7NC	
CP502	36	**019234**	105	38-13/32	36-31/32		52-1/2	54-1/2									1-1/4-7NC	
CP515	12	**019240**	105	14-23/32	14-15/32	5-1/8	30-1/2	32-1/2	9-1/4	9-3/8	11-5/32	7/8	2	5	4	5/8	1-1/2-6NC	
CP515	18	**019241**	120	20-23/32	20-15/32		36-1/2	38-1/2									1-1/2-6NC	
CP515	24	**019242**	135	26-23/32	26-15/32		42-1/2	44-1/2									1-1/2-6NC	
CP515	30	**019243**	150	32-23/32	32-15/32		48-1/2	50-1/2									1-1/2-6NC	
CP515	36	**019244**	165	38-23/32	38-15/32		54-1/2	56-1/2									1-1/2-6NC	
CP613	12	**019250**	115	15-1/32	-	5-5/8	32	34-1/4	9-7/8	-	12-1/16	15/16	2	5	4	3/4	1-3/4-5NC	
CP613	18	**019251**	135	21-1/32	-		38	40-1/4									1-3/4-5NC	
CP613	24	**019252**	155	27-1/32	-		44	46-1/4									1-3/4-5NC	
CP613	30	**019253**	175	33-1/32	-		50	52-1/4									1-3/4-5NC	
CP613	36	**019254**	195	39-1/32	-		56	58-1/4									1-3/4-5NC	
CP810	12	**019260**	185	16-9/32	-	7	36	38-1/2	12	-	14-3/4	1-3/16	2-1/2	6	4	3/4	2-4-1/2-NC	
CP810	18	**019261**	210	22-9/32	-		42	44-1/2									2-4-1/2-NC	
CP810	24	**019262**	235	28-9/32	-		48	50-1/2									2-4-1/2-NC	
CP810	30	**019263**	260	34-9/32	-		54	56-1/2									2-4-1/2-NC	
CP810	36	**019264**	285	40-9/32	-		60	62-1/2									2-4-1/2-NC	
CP908	12	**019270**	280	17-31/32	-	7-1/2	40-3/4	45-3/4	13-1/2	-	16-1/16	1-1/4	5	10	4	1-1/8	2-4-1/2-NC	
CP908	18	**019271**	310	23-31/32	-		46-3/4	51-3/4									2-4-1/2-NC	
CP908	24	**019272**	340	29-31/32	-		52-3/4	57-3/4									2-4-1/2-NC	
CP908	30	**019273**	370	35-31/32	-		58-3/4	63-3/4									2-4-1/2-NC	
CP908	36	**019274**	400	41-31/32	-		64-3/4	69-3/4									2-4-1/2-NC	
CP1004	12	**019280**	370	18-29/32	-	8-1/8	44-1/2	49-1/2	15-3/8	-	17-5/16	1-1/2	5-1/2	10	4	1-1/8	2-1/4-4-1/2-NC	
CP1004	18	**019281**	400	24-29/32	-		50-1/2	55-1/2									2-1/4-4-1/2-NC	
CP1004	24	**019282**	430	30-29/32	-		56-1/2	61-1/2									2-1/4-4-1/2-NC	
CP1004	30	**019283**	460	36-29/32	-		62-1/2	67-1/2									2-1/4-4-1/2-NC	
CP1004	36	**019284**	490	42-29/32	-		68-1/2	73-1/2									2-1/4-4-1/2-NC	

Plummer Blocks
Sleeve Bearings
SLEEVOIL
Take-Up Frames
Engineering
Part Number Index
Keyword Index

SELECTION/DIMENSIONS



Take-Up Frames - CP

CENTER PULL (CP)

Frame Size	Travel	Frame Part Number	Frame Weight	Travel Maximum		Imperial		S2000		Type K		Type E	
				S2 & IP	Type E & K	L1	L2	L1	L2	L1	L2	L1	L2
CP308	12	**019200**	30	15-15/32	15-15/32	57/64	1-47/64	53/64	1-45/64	1-1/32	1-1/2	1-1/2	1-1/2
CP308	18	**019201**	34	21-15/32	21-15/32								
CP308	24	**019202**	38	27-15/32	27-15/32								
CP308	30	**019203**	42	33-15/32	33-15/32								
CP308	36	**019204**	46	39-15/32	39-15/32								
CP400	12	**019210**	55	14-27/32	14-23/32	53/64	1-63/64	55/64	1-13/16	1-7/32	1-3/4	1-3/4	1-3/4
CP400	18	**019211**	65	20-27/32	20-23/32								
CP400	24	**019212**	75	26-27/32	26-23/32								
CP400	30	**019213**	85	32-27/32	32-23/32								
CP400	36	**019214**	95	38-27/32	38-23/32								
CP408	12	**019220**	61	14-5/32	14-3/32	59/64	2-7/64	29/32	1-63/64	1-9/32	1-7/8	1-7/8	1-7/8
CP408	18	**019221**	71	20-5/32	20-3/32								
CP408	24	**019222**	81	26-5/32	26-3/32								
CP408	30	**019223**	85	32-5/32	32-3/32								
CP408	36	**019224**	95	38-5/32	38-3/32								
CP502	12	**019230**	65	14-13/32	12-31/32	1-13/64	2-7/32	1-13/64	2	1-5/8	2	2	2
CP502	18	**019231**	75	20-13/32	18-31/32								
CP502	24	**019232**	85	26-13/32	24-31/32								
CP502	30	**019233**	95	32-13/32	30-31/32								
CP502	36	**019234**	105	38-13/32	36-31/32								
CP515	12	**019240**	105	14-23/32	14-15/32	1-7/32	2-9/32	1-3/16	2-13/32	1-5/8	2-1/4	2-1/4	2-1/4
CP515	18	**019241**	120	20-23/32	20-15/32								
CP515	24	**019242**	135	26-23/32	26-15/32								
CP515	30	**019243**	150	32-23/32	32-15/32								
CP515	36	**019244**	165	38-23/32	38-15/32								
CP613	12	**019250**	115	15-1/32	-	1-15/32	2-11/16	1-31/64	2-33/64	-	-	-	-
CP613	18	**019251**	135	21-1/32	-								
CP613	24	**019252**	155	27-1/32	-								
CP613	30	**019253**	175	33-1/32	-								
CP613	36	**019254**	195	39-1/32	-								
CP810	12	**019260**	185	16-9/32	-	1-21/32	3-3/64	1-39/64	2-55/64	-	-	-	-
CP810	18	**019261**	210	22-9/32	-								
CP810	24	**019262**	235	28-9/32	-								
CP810	30	**019263**	260	34-9/32	-								
CP810	36	**019264**	285	40-9/32	-								
CP908	12	**019270**	280	17-31/32	-			3-1/16	3-15/32	-	-	-	-
CP908	18	**019271**	310	23-31/32	-								
CP908	24	**019272**	340	29-31/32	-								
CP908	30	**019273**	370	35-31/32	-								
CP908	36	**019274**	400	41-31/32	-								
CP1004	12	**019280**	370	18-29/32	-			3-17/64	3-41/64	-	-	-	-
CP1004	18	**019281**	400	24-29/32	-								
CP1004	24	**019282**	430	30-29/32	-								
CP1004	30	**019283**	460	36-29/32	-								
CP1004	36	**019284**	490	42-29/32	-								

FEATURES/BENEFITS PAGE B19-2 | HOW TO ORDER/NOMENCLATURE PAGE B19-7 | SELECTION/DIMENSIONS PAGE B19-8



Center Pull Take-Up Frame Bearings

TAPERED ROLLER BEARINGS

Type E

Shaft Size	Frame Size
1-3/8 1-7/16	CP-308
1-1/2 1-5/8 1-11/16	CP-400
1-3/4 1-7/8 1-15/16 2	CP-400
2-3/16	CP-408
2-1/4 2-7/16 2-1/2	CP-502
2-11/16 2-3/4 2-15/16 3	CP-515

- Center Pull Take-Up Frames Are Not Supplied With Bearings. First Match The Take-Up Frame With The Bearing Size From This Page. Then Turn To The Page Listed For The Specific Bearing Part Number
- Type E - B10-30
- Type K - B10-46
- See B19-27 and B19-28 For Center Pull Take-Up Frame Travel Options And Part Numbers

Type K

Shaft Size	Frame Size
1-7/16	CP-308
1-15/16	CP-400
2-3/16	CP-408
2-7/16 2-1/2	CP-502
2-15/16 3	CP-515

SPHERICAL ROLLER BEARINGS

S-2000

Shaft Size	Frame Size
1-3/8 1-7/16 1-1/2	CP-308
1-11/16 1-3/4	CP-400
1-15/16 2	CP-400
2-3/16	CP-408
2-7/16	CP-502
2-11/16 2-15/16 3	CP-515
3-7/16	CP-613
3-15/16	CP-810
4-7/16	CP-908
4-15/16	CP-1004

- Center Pull Take-Up Frames Are Not Supplied With Bearings. First Match The Take-Up Frame With The Bearing Size From This Page. Then Turn To The Page Listed For The Specific Bearing Part Number
- S-2000 - B12-36 to B12-39
- IMPERIAL - B14-18 to B14-22
- See B19-27 and B19-28 For Center Pull Take-Up Frame Travel Options And Part Numbers

IMPERIAL - IP

Shaft Size	Frame Size
1-1/8 1-3/16 1-1/4 1-3/8 1-7/16 1-1/2	CP308
1-5/8 1-11/16 1-3/4	CP-400
1-7/8 1-15/16 2	CP-400
2-3/16 2-1/4	CP-408
2-3/8 2-7/16 2-1/2	CP-502
2-11/16 2-3/4 2-15/16 3	CP-515
3-3/16 3-1/4 3-7/16 3-1/2	CP-613
3-11/16 3-15/16 4	CP-810

SELECTION/DIMENSIONS

Take-Up Frames - LD

LD PROTECTED SCREW TAKE-UP FRAMES

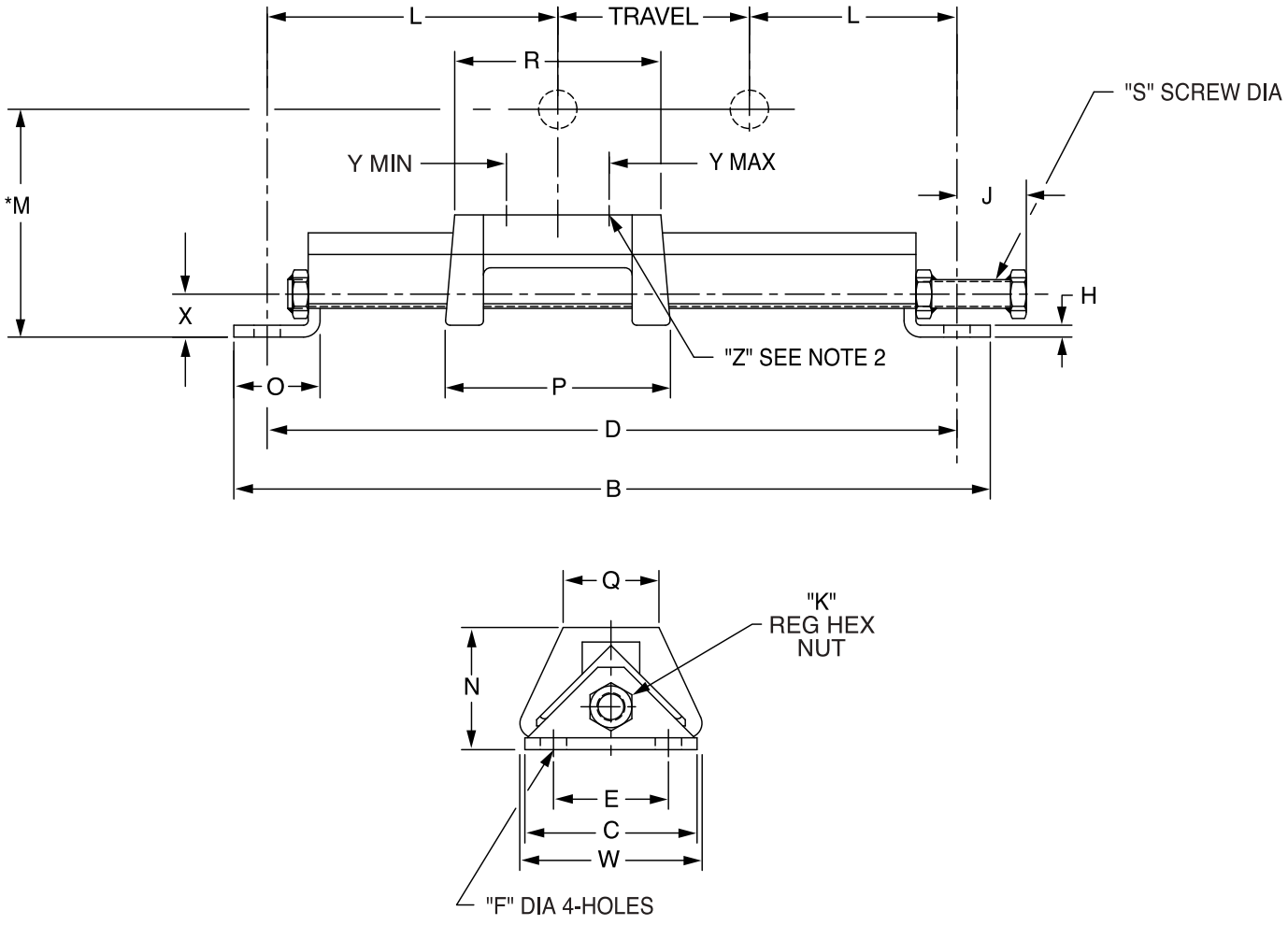

DODGE



Take-Up Frames - LD

LD PROTECTED SCREW TAKE-UP FRAMES

Frame Size x Travel	Part No.	Wt.	B	C	D	E	F Bolt Dia.	H	J	K	L	N	O
LD-10x6	**039005**	10	19-1/2	3-3/4	18	2-1/2	3/8	1/4	9/16	9/16	6	2-3/4	2-1/8
LD-10x9	**039006**	11	22		20-1/2						5-3/4		
LD-10x12	**038910**	13	25		23-1/2						5-3/4		
LD-10x18	**038911**	14	31		29-1/2						5-3/4		
LD-10x30	**038912**	16	43		41-1/2						5-3/4		
LD-10x36	**038913**	18	49		47-1/2						5-3/4		
LD-10x42	**038914**	20	55		53-1/2						5-3/4		
LD-10x48	**038915**	22	61		59-1/2						5-3/4		
LD-20x6	**039007**	12	19-1/2	3-3/4	18	2-1/2	1/2	1/4	1-3/4	9/16	6	2-19/32	2-1/8
LD-20x9	**039008**	13	22		20-1/22						5-3/4		
LD-20x12	**039009**	14	25		23-1/2						5-3/4		
LD-20x18	**039010**	17	33-1/2		32						7		
LD-20x24	**039003**	18	39-1/2		38						7		
LD-20x30	**039002**	20	45-1/2		44						7		
LD-20x36	**039043**	22	51-1/2		50						7		
LD-20x42	**038916**	24	57-1/2		56						7		
LD-20x48	**039044**	26	63-1/2		62						7		
LD-30x12	**039011**	18	28-1/4	3-3/4	26-3/4	2-1/2	1/2	1/4	1-3/4	9/16	7-3/8	2-11/16	2-1/8
LD-30x18	**039012**	21	34-1/4		32-3/4						7-3/8		
LD-30x24	**039084**	24	40-1/4		38-3/4						7-3/8		
LD-30x30	**038917**	27	46-1/4		44-3/4						7-3/8		
LD-30x36	**038918**	30	52-1/4		50-3/4						7-3/8		
LD-30x42	**038919**	33	58-1/4		56-3/4						7-3/8		
LD-30x48	**038920**	35	64-1/4		62-3/4						7-3/8		
LD-40x12	**039013**	25	28-1/4	4-3/4	26-1/2	3	5/8	5/16	1-3/4	9/16	7-1/4	3-3/16	2-1/4
LD-40x18	**039014**	28	34-1/4		32-1/2						7-1/4		
LD-40x24	**039073**	31	40-1/4		38-1/2						7-1/4		
LD-40x30	**038921**	34	46-1/4		44-1/2						7-1/4		
LD-40x36	**038922**	37	52-1/4		50-1/2						7-1/4		
LD-40x42	**038923**	40	58-1/4		56-1/2						7-1/4		
LD-40x48	**038924**	43	64-1/4		62-1/2						7-1/4		
LD-45x12	**039018**	50	33	5	31-1/4	3	3/4	5/16	1-9/16	11/16	9-3/4	4-1/8	2-1/2
LD-45x18	**039019**	55	39-1/4		37-1/2						9-3/4		
LD-45x24	**039097**	58	45-1/4		43-1/2						9-3/4		
LD-45x30	**038925**	65	51-1/4		49-1/2						9-3/4		
LD-45x36	**038926**	70	57-1/4		55-1/2						9-3/4		
LD-45x42	**038927**	75	63-1/4		61-1/2						9-3/4		
LD-45x48	**038928**	80	69-1/4		67-1/2						9-3/4		
LD-50x6	**039004**	49	27	5	25-1/4	3	3/4	5/16	1-9/16	11/16	9-5/8	4-1/8	2-1/2
LD-50x12	**039015**	54	33		31-1/4						9-3/4		
LD-50x18	**039016**	60	39-1/4		37-1/2						9-3/4		
LD-50x24	**039017**	65	45-1/4		43-1/2						9-3/4		
LD-50x30	**038929**	71	51-1/4		49-1/2						9-3/4		
LD-50x36	**038930**	77	57-1/4		55-1/2						9-3/4		
LD-50x48	**038932**	90	69-1/4		67-1/2						9-3/4		

Plummer Blocks
Sleeve Bearings
SLEEVOIL
Take-Up Frames
Engineering
Part Number Index
Keyword Index

SELECTION/DIMENSIONS



Take-Up Frames - LD

LD PROTECTED SCREW TAKE-UP FRAMES

Frame Size x Travel	Part No.	Wt.	P	Q	R	S Screw Dia.	W	X	Y Bolt Centers		Z Bolt Dia.	Angle
									Max.	Min.		
LD-10x6	**039005**	10	5-7/8	1-1/2	5-3/8	3/4	3-1/4	15/16	4-3/8	2-7/8	3/8 x 1-1/2	2 x 2 x 1/4
LD-10x9	**039006**	11										
LD-10x12	**038910**	13										
LD-10x18	**038911**	14										
LD-10x30	**038912**	16										
LD-10x36	**038913**	18										
LD-10x42	**038914**	20										
LD-10x48	**038915**	22										
LD-20x6	**039007**	12	7-3/4	2-1/8	7-1/4	3/4	3-3/4	15/16	6-1/4	4-7/16	1/2 x 2-1/2	2 x 2 x 1/4
LD-20x9	**039008**	13										
LD-20x12	**039009**	14										
LD-20x18	**039010**	17										
LD-20x24	**039003**	18										
LD-20x30	**039002**	20										
LD-20x36	**039043**	22										
LD-20x42	**038916**	24										
LD-20x48	**039044**	26										
LD-30x12	**039011**	18	8-1/2	2-1/4	8	3/4	3-3/4	15/16	7	5-3/4	5/8 x 2-1/2	2 x 2 x 5/16
LD-30x18	**039012**	21										
LD-30x24	**039084**	24										
LD-30x30	**038917**	27										
LD-30x36	**038918**	30										
LD-30x42	**038919**	33										
LD-30x48	**038920**	35										
LD-40x12	**039013**	25	9-3/4	2-1/2	9-1/4	3/4	4-3/4	1-1/16	7-7/8	6-3/8	5/8 x 3	2-1/2 x 2-1/2 x 5/16
LD-40x18	**039014**	28										
LD-40x24	**039073**	31										
LD-40x30	**038921**	34										
LD-40x36	**038922**	37										
LD-40x42	**038923**	40										
LD-40x48	**038924**	43										
LD-45x12	**039018**	50	13-1/2	3-1/2	13	1	5-7/8	1-1/4	11-1/4	7-1/4	3/4 x 3-1/2	3 x 3 x 1/2
LD-45x18	**039019**	55										
LD-45x24	**039097**	58										
LD-45x30	**038925**	65										
LD-45x36	**038926**	70										
LD-45x42	**038927**	75										
LD-45x48	**038928**	80										
LD-50x6	**039004**	49	13-1/2	3-1/2	13	1	5-7/8	1-1/4	11-1/8	7-5/8	7/8 x 4	3 x 3 x 1/2
LD-50x12	**039015**	54										
LD-50x18	**039016**	60										
LD-50x24	**039017**	65										
LD-50x30	**038929**	71	13-1/2	3-1/2	13	1	5-7/8					
LD-50x36	**038930**	77										
LD-50x48	**038932**	90										

FEATURES/BENEFITS PAGE B19-2 | HOW TO ORDER/NOMENCLATURE PAGE B19-7 | SELECTION/DIMENSIONS PAGE B19-8



Light Duty Take-Up Frame Bearings

BALL BEARINGS

NORMAL DUTY

SETSCREW - SC, SCU, SCB, VSC, VSCB
D-LOK - DL, DLB
ECCENTRIC LOCK - SXR, SXRU, SXRB, SXV, SXVU, SXVB
GRIP TIGHT - GT

Series	Shaft Size	Frame Size
203	1/2 5/8	LD-10
204	1/2 5/8 3/4 20mm	LD-10
205	7/8 15/16 25mm	LD-10
206	1-1/16 1-1/8 1-3/16 1-1/4 30mm	LD-20
207	1-1/4 1-5/16 1-3/8 1-7/16 35mm	LD-20
208	1-1/2 1-5/8 40mm	LD-20
209	1-5/8 1-11/16 1-3/4 45mm	LD-20
210	1-15/16 2 50mm	LD-30
211	2 2-3/16 2-1/4 55mm	LD-40
212	2-1/4 2-7/16 60mm	LD-40
214	2-1/2 2-11/16 70mm	LD-45
215	2-15/16 75mm	LD-50

- Light Duty Take-Up Frames Are Not Supplied With Bearings. First Match The Take-Up Frame With The Bearing Size From This Page. Then Turn To The Page Listed For The Specific Bearing Part Number.

- EZ-KLEEN Polymer Housing - B1-14 to B1-29
- Grip Tight (GT & GTM)- B2-8 to B2-19
- Setscrew (SC, SCM & VSC) - B12-12 to B12-15
- Eccentric Lock (SXR & SXV) - B7-12 to B7-15
- D-LOK (DL & DLM) - B6-10 to B10-22

- See B19-32 For Light Duty Take-Up Frame Travel Options And Part Numbers.

MEDIUM DUTY

SETSCREW - SCM, SCH
D-LOK - DLM, DLH
GRIP TIGHT - GTM

Series	Shaft Size	Frame Size
206	1 25mm	LD-20
207	1-3/16 1-1/4 30mm	LD-20
208	1-7/16 35mm	LD-20
209	1-1/2 40mm	LD-20
210	1-11/16 1-3/4 45mm	LD-30
211	1-15/16 2 50mm	LD-40
212	2-3/16 2-1/4 55mm	LD-40
214	2-7/16 2-1/2 65mm	LD-45
215	2-11/16 70mm	LD-50
216	2-15/16 3 75mm	LD-50
218	3-7/16 3-1/2 85mm	LD-50

SELECTION/DIMENSIONS



Light Duty Take-Up Frame Bearings

SPHERICAL ROLLER BEARINGS

IMPERIAL - IP

Shaft Size	Frame Size
1-1/8 1-316 1-1/4 1-3/8 1-7/16 1-1/2	LD-20
1-5/8 1 11/16 1-3/4	LD-20
1-7/8 1 15/16 2	LD-30
2-3/16 2-1/4	LD-40
2-3/8 2-7/16 2-1/2	LD-40
2-11/16 2-3/4 2-15/16 3	LD-45
3-3/16 3-1/4 3-7/16 3-1/2	LD-50

* LD Frames are drilled for two bolt pillow blocks

S-2000

Shaft Size	Frame Size
1-3/8 1-7/16 1-1/2	LD-20
1-11/16 1-3/4	LD-20
1-15/16 2	LD-30
2-3/16	LD-40
2-7/16	LD-40
2-11/16 2-15/16 3	LD-45
3-7/16	LD-50

- Light Duty Take-Up Frames Are Not Supplied With Bearings. First Match The Take-Up Frame With The Bearing Size From This Page. Then Turn To The Page Listed For The Specific Bearing Part Number

- S-2000 - B12-14 to B12-17
- Unisphere II - B13-12 to B13-13
- IMPERIAL - B114-30 to B14-31

- See B19-32 For Light Duty Take-Up Frame Travel Options And Part Numbers.

UNISPHERE II

Shaft Size	Frame Size
1-7/16 1-1/2 1-11/16 1-3/4	LD-20
1-15/16 2	LD-30
2-3/16 2-7/16 2-1/2	LD-40
2-11/16 2-3/4 2-15/16 3	LD-45
3-7/16 3-1/2	LD-50

Frame Size	Max Recommended Housing Cap Load (90˚ Load Angle)
LD-10	2100
LD-20	3900
LD-30	6200
LD-40	6200
LD-45	9100
LD-50	12500

* Consult the Application Engineering Department for loads greater than listed. In all cases, when loads are heavy, the L10 life of the bearing should be checked for proper selection and life requirements.



Light Duty Take-Up Frame Bearings

SLEEVE BEARING

LT-700
LT-1000

Series	Shaft Size	Frame Size
204	3/4	LD-10
205	7/8 15/16 1 25mm	LD-10
206	1-1/8 1-3/16 30mm	LD-20
207	1-1/4 1-3/8 1-7/16 35mm	LD-20
209	1-11/16 1-3/4 45mm	LD-20
210	1-15/16 2 50mm	LD-30
211	2-3/16 55mm	LD-40
212	2-7/16 2-1/2 55mm	LD-40
215	2-15/16 3	LD-50

- Light Duty Take-Up Frames Are Not Supplied With Bearings. First Match The Take-Up Frame With The Bearing Size From This Page. Then Turn To The Page Listed For The Specific Bearing Part Number

- LT-700 - B17-10 to B17-13
- LT-1000 - B17-10 to B17-13
- Babbitt Sleeve - B17-38 to B17-39
- See B19-32 For Light Duty Take-Up Frame Travel Options And Part Numbers

Babbitted Solid Journal Bearing

Shaft Size	Frame Size
1/2 to 1-1/4	LD-10
1-11/16 1-3/4	LD-20
2-15/16	LD-45

SELECTION/DIMENSIONS

Take-Up Frames - HD

HD PROTECTED SCREW TAKE-UP FRAMES

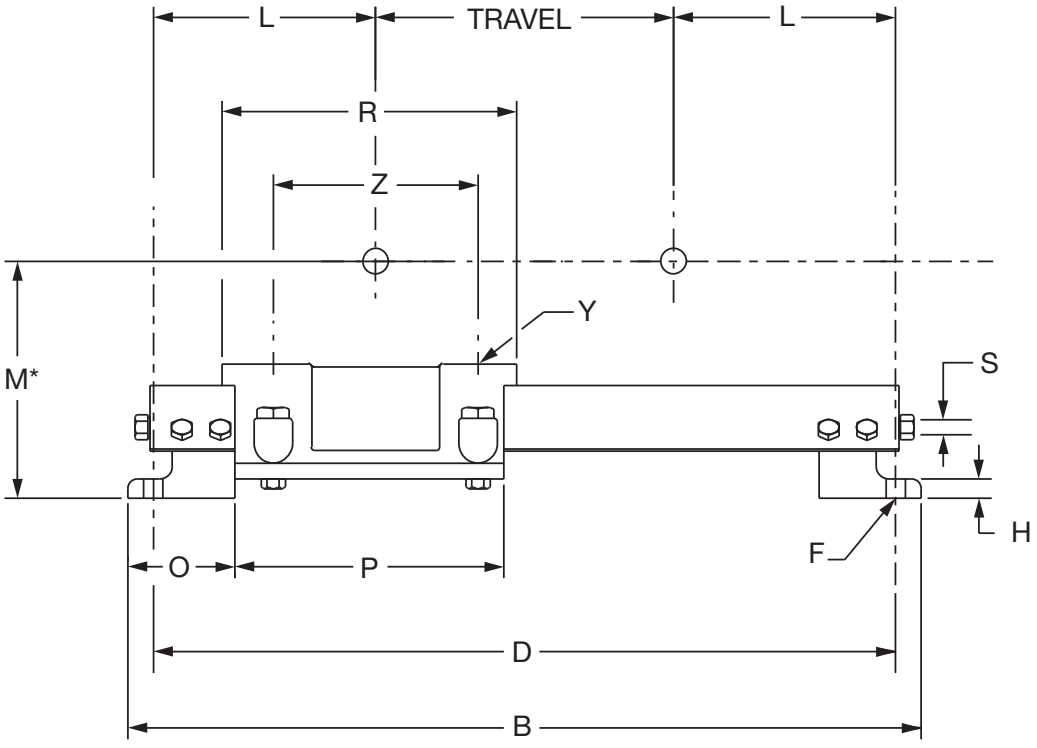

*M = N + Pillow Block Base to Center Dimemsion

The HD Protected Screw Take-Up Frames

HD 200 through HD 350 Take-Up frames will accommodate pillow blocks on saddles which are slotted for two-bolt Pillow Blocks and may be ordered by part numbers. When using four-bolt Pillow Blocks; or on HD frames 400 and larger, please supply:

1. Bore size of pillow block
2. Type of block (Type E, Double Interlock, USAF, etc.)
3. Whether pillow block is two-or four-bolt style
4. Frame Travel

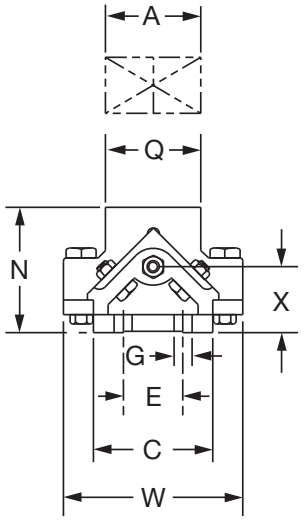

DODGE



Take-Up Frames - HD

HD PROTECTED SCREW TAKE-UP FRAMES

Frame Size	Travel	Part No. **✦	Frame Wt.	B	C	D
HD-200*	12	**089020**	79	31	5	29
	18	**089021**	82	37	5	35
	24	**089022**	90	43	5	41
	30	**089023**	95	47	5	47
	36	**089024**	100	55	5	53
	48	**089150**	110	67	5	65
HD-250*	12	**089151**	115	35-1/4	6	32-3/4
	18	**089025**	125	41-1/4	6	38-3/4
	24	**089026**	135	47-1/4	6	44-3/4
	30	**089027**	137	53-1/4	6	50-3/4
	36	**089028**	143	59-1/4	6	56-3/4
	48	**089152**	153	71-1/4	6	68-3/4
	60	**089600**	163	83-1/4	6	80-3/4
HD-300*	12	**089153**	175	38-1/4	6-1/2	35-1/2
	18	**089029**	184	44-1/4	6-1/2	41-1/2
	24	**089030**	194	50-1/4	6-1/2	47-1/2
	30	**089031**	206	56-1/4	6-1/2	53-1/2
	36	**089032**	214	62-1/4	6-1/2	59-1/2
	48	**089033**	240	74-1/4	6-1/2	71-1/2
	60	**089601**	266	86-1/4	6-1/2	83-1/2
HD-350*	12	**089154**	195	40	6-1/2	37-1/4
	18	**089034**	204	46	6-1/2	43-1/4
	24	**089035**	212	52	6-1/2	49-1/4
	30	**089036**	220	58	6-1/2	55-1/4
	36	**089037**	234	64	6-1/2	61-1/4
	48	**089038**	250	76	6-1/2	73-1/4
	60	**089602**	276	88	6-1/2	85-1/4
HD-400**	12	**089155**	340	44	6-1/2	41-1/4
	18	**089039**	350	50	6-1/2	47-1/4
	24	**089040**	360	56	6-1/2	53-1/4
	30	**089041**	370	62	6-1/2	59-1/4
	36	**089042**	380	68	6-1/2	65-1/4
	48	**089043**	400	80	6-1/2	77-1/4
	60	**089603**	420	92	6-1/2	89-1/4
HD-500**	12	**089156**	420	49-1/2	7	47
	18	**089044**	440	55-1/2	7	53
	24	**089045**	460	61-1/2	7	59
	30	**089046**	480	67-1/2	7	65
	36	**089047**	500	73-1/2	7	71
	48	**089048**	530	85-1/2	7	83
	60	**089604**	560	97-1/2	7	95

Frame Size	E	F Bolt Dia.	G Dia.	H	L	N	O	P	Saddle *Dimensions		S Scr. Dia.	W	X	Y Bolt Dia.	Z	
									Q	R					Max.	Min.
HD-200	2-1/2	5/8	3/4	3/4	8-1/2	5-1/4	4	11	4	11	1	7-1/2	2-9/16	5/8	9-1/16	5-15/16
HD-250	3	5/8	3/4	3/4	10-3/8	6-1/4	5	13-1/4	4-1/2	13	1	8-1/4	3-1/4	3/4	10-7/8	7-5/8
HD-300	3	3/4	7/8	7/8	11-3/4	7	6	14-1/4	5	14	1-1/4	10	3-1/2	3/4	11-5/8	9-1/4
HD-350	3	3/4	7/8	7/8	12-5/8	7	6	16	6	17	1-1/4	10	3-1/2	7/8	13-11/16	10-3/4
HD-400	3	3/4	7/8	7/8	14-5/8	7	6	20	7-1/4	20	1-1/4	10	3-1/2	✦	✦	✦
HD-500	4	7/8	1	1	17-1/2	7-3/4	6-3/4	23-1/2	8-1/2	23-1/2	1-1/2	12-1/2	3-21/32	✦	✦	✦

Consult DODGE for HD600 and HD650 Take-Up Frames, for large bore bearings.

✦ Solid saddle must be drilled and tapped per order (HD-400 & HD500 frames)

* Saddle is slotted to receive 2-bolt blocks.

** For 4-bolt pillow blocks, all HD frames must be drilled and tapped per order. Refer to Page B19-36

FEATURES/BENEFITS PAGE B19-2 | HOW TO ORDER/NOMENCLATURE PAGE B19-7 | SELECTION/DIMENSIONS PAGE B19-8

SELECTION/DIMENSIONS

Take-Up Frames - HD

USING HD PROTECTED SCREW TAKE-UP FRAMES FOR BEARINGS OTHER THAN DODGE

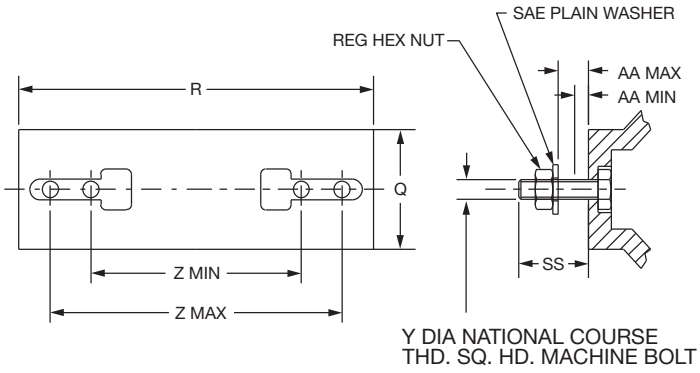



Slotted saddle type HD frames (200 through 350 sizes) may be used with 2-bolt pillow blocks other than DODGE pillow blocks listed in tables on previous pages. The dimensions shown below are listed to determine whether frame is applicable to this type of application.

Frame Size	AA		Saddle Dimensions	
	Min.	Max.	Q	R
HD-200	2	3-1/64	4	11
HD-250	2-5/8	3-13/16	4-1/2	13
HD-300	2-31/32	4-5/32	5	14
HD-350	2-27/32	4-11/16	6	17

Frame Size	Y Bearing Hold Down Bolts			SS	Z Bolt Centers	
	Diameter	Part Number	Length Under Head		Max.	Min.
HD-200	5/8-11	**416173**	4	3-5/8	9-7/16	5-15/16
HD-250	3/4-10	**416229**	5	4-17/32	10-7/8	7-5/8
HD-300	3/4-10	**416231**	5-1/2	4-7/8	11-5/8	9-1/4
HD-350	7/8-9	**416275**	5-1/2	5	13-11/16	10-3/4

Note: The Pillow Blocks must use the bolt shown and have the capability of mounting between the Z bolt centers. The height off the mounting bolt pad must be within the AA dimensions.

DODGE



Heavy Duty Take-Up Frame Bearings

TAPERED ROLLER BEARINGS

Type E

Shaft Size	Frame Size
1-1/2 to 2-1/2	HD-200*
2-11/16 to 3	HD-250*
3-3/16 to 3-1/2	HD-350*
3-15/16 to 5	HD-400**
5-7/16 to 6	HD-500**

Type K Double Interlock

Shaft Size	Frame Size
1-1/2 to 2-3/16	HD-200*
2-1/4 to 2-1/2	HD-250*
2-11/16 to 3	HD-300*
3-3/16 to 3-1/2	HD-350*
3-15/16 to 4-1/2	HD-400**
4-15/16 to 5	HD-500**

TAF

Shaft Size	Frame Size
2-7/16 to 2-1/2	HD-200*
2-15/16 to 3	HD-250*
3-7/16 to 4	HD-350*
4-7/16 to 5	HD-400**
5-7/16	HD-500**

- Heavy Duty Take-Up Frames Are Not Supplied With Bearings. First Match The Take-Up Frame With The Bearing Size From This Page. Then Turn To The Page Listed For The Specific Bearing Part Number

- Type K - B10-40
- Type E - B10-22
- DOUBLE INTERLOCK - B10-50
- TAF - B10-58
- See B19-37 For Heavy Duty Take-Up Frame Travel Options and Part Numbers

* HD-200, HD-250, HD-300 and HD 350 Frames Are Drilled For Two Bolt Base Pillow Blocks. For 4-bolt pillow blocks, refer to note on page B19-36.

****HD-400 And Larger Are Drilled And Tapped Per Order. Specify Bearing Type When Ordering.**

FEATURES/BENEFITS PAGE B19-2	HOW TO ORDER/NOMENCLATURE PAGE B19-7	SELECTION/DIMENSIONS PAGE B19-8

SELECTION/DIMENSIONS



Heavy Duty Take-Up Frame Bearings

SPECIALITY TAPERED ROLLER BEARINGS

Special Duty

Shaft Size	Frame Size
1-3/8 to 2	HD-200
2-1/8 to 2-1/2	HD-250
2-3/8 to 3	HD-300
3-3/16 to 3-1/2	HD-350
3-11/16 to 4	HD-400**
4-7/16 to 5	HD-500**

Type C

Shaft Size	Frame Size
1-3/8 to 1-15/16	HD-200
2 to 2-7/16	HD-250
2-3/8 to 2-15/16	HD-300
3 to 3-7/16	HD-350
3-1/2 to 4	HD-400**
4-7/16 to 5	HD-500**

All-Steel

Shaft Size	Frame Size
2-11/16 to 3	HD-250*
3-7/16 to 3-1/2	HD-300*
3-15/16 to 4	HD-350*
4-7/17 to 5	HD-400**

- Heavy Duty Take-Up Frames Are Not Supplied With Bearings. First Match The Take-Up Frame With The Bearing Size From This Page. Then Turn To The Page Listed For The Specific Bearing Part Number

- Specialty Duty - B11-30
- Type C - B11-8
- All Steel - B11-54
- See B19-37 For Heavy Duty Take-Up Frame Travel Options and Part Numbers

*HD-200, HD-250, HD-300 and HD 350 Frames Are Drilled For Two Bolt Base Pillow Blocks. For 4-bolt pillow blocks, refer to note on page B19-36.
****HD-400 And Larger Are Drilled And Tapped Per Order. Specify Bearing Type When Ordering.**



Heavy Duty Take-Up Frame Bearings

UNITIZED SPHERICAL ROLLER BEARINGS

Imperial - IP

Shaft Size	Frame Size
1-1/8 to 2-1/2	HD-200*
2-11/16 2-3/4 2-15/16 3	HD-250*
3-3/16 3-1/4 3-7/16 3-1/2	HD-300*
3-11/16 3-15/16 4 4-7/16 4-1/2	HD-350*
4-15/16 5	HD-400**

S-2000

Shaft Size	Frame Size
1-3/8 1-7/16 1-1/2 1-11/16 1-3/4 1-15/16 2 2-3/16 2-7/16 2-11/16	HD-200*
2-15/16 3	HD-250*
3-7/16	HD-300*
3-15/16 4-7/16	HD-350*
4-15/16	HD-400**

UNISPHERE II

Shaft Size	Frame Size
1-15/16 2 2-3/16 2-7/16 2-1/2	HD-200
2-11/16 2-3/4 2-15/16 3	HD-250
3-7/16 3-1/2	HD-300
3-15/16 4	HD-350

- Heavy Duty Take-Up Frames Are Not Supplied With Bearings. First Match The Take-Up Frame With The Bearing Size From This Page. Then Turn To The Page Listed For The Specific Bearing Part Number

- S-2000 - B12-14 to B12-29
- IMPERIAL - B14-30 to B14-37
- UNISPHERE - B13-12 to B13-13
- See B19-37 For Heavy Duty Take-Up Frame Travel Options and Part Numbers

*HD-200, HD-250, HD-300 and HD 350 Frames Are Drilled For Two Bolt Base Pillow Blocks. For 4-bolt pillow blocks, refer to note on page B19-36.
****HD-400 And Larger Are Drilled And Tapped Per Order. Specify Bearing Type When Ordering.**

SELECTION/DIMENSIONS



Heavy Duty Take-Up Frame Bearings

UNIFIED SPHERICAL ROLLER BEARINGS

USAF-500
SAF-XT
SAFS
ISAF

Shaft Size	Frame Size
1-15/16 to 2-3/16	HD-200*
2-7/16 to 3	HD-250*
3-3/16	HD-300*
3-7/16 to 3-1/2	HD-350*
3-15/16 to 4-1/2	HD-400**
4-15/16 to 5-1/2	HD-500**

Take-Up Frame Size	Maximum Recommended Housing Cap. Loads ** (at 90º load angle)
HD-200	2800
HD-250	4200
HD-300	4200
HD-350	3500
HD-400	***
HD-500	***

- Heavy Duty Take-Up Frames Are Not Supplied With Bearings. First Match The Take-Up Frame With The Bearing Size From This Page. Then Turn To The Page Listed For The Specific Bearing Part Number

- IMPERIAL - B14-52 to B14-57
- USAF-500 - B14-26 to B14-29
- SAF-XT - B15-56 to B15-59
- SAFS - B15-61 to B15-63
- See B19-37 For Heavy Duty Take-Up Frame Travel Options and Part Numbers

*HD-200, HD-250, HD-300 and HD 350 Frames Are Drilled For Two Bolt Base Pillow Blocks. For 4-bolt pillow blocks, refer to note on page B19-36.

****HD-400 And Larger Are Drilled And Tapped Per Order. Specify Bearing Type When Ordering.**



Heavy Duty Take-Up Frame Bearings

SLEEVE BEARINGS

MM-700
MM-1000

Shaft Size	Frame Size
3-7/16 3-1/2	HD-250*
3-15/16 4	HD-300*
4-7/16 4-1/2	HD-350*
4-15/16 5	HD-400**

- Heavy Duty Take-Up Frames Are Not Supplied With Bearings. First Match The Take-Up Frame With The Bearing Size From This Page. Then Turn To The Page Listed For The Specific Bearing Part Number

- MM 700 - B17-14
- MM 1000 - B17-14
- Angle Babbitt - B17-42 to B17-43
- Bronze B17-50 to B17-53

- See B19-37 For Heavy Duty Take-Up Frame Travel Options and Part Numbers

Angle Babbitt
Bronze Babbitt

Shaft Size	Frame Size
1-15/16 2-3/16 2-7/16	HD-200*
2-11/16 2-15/16	HD-250*
3-7/16	HD-300*
3-15/16	HD-350*
4-7/16 4-15/16	HD-400**
5-7/16 5-15/16	HD-500**

*HD-200, HD-250, HD-300 and HD 350 Frames Are Drilled For Two Bolt Base Pillow Blocks. For 4-bolt pillow blocks, refer to note on page B19-36.

****HD-400 And Larger Are Drilled And Tapped Per Order. Specify Bearing Type When Ordering.**

SELECTION/DIMENSIONS

Take-Up Frames - BRONZOIL

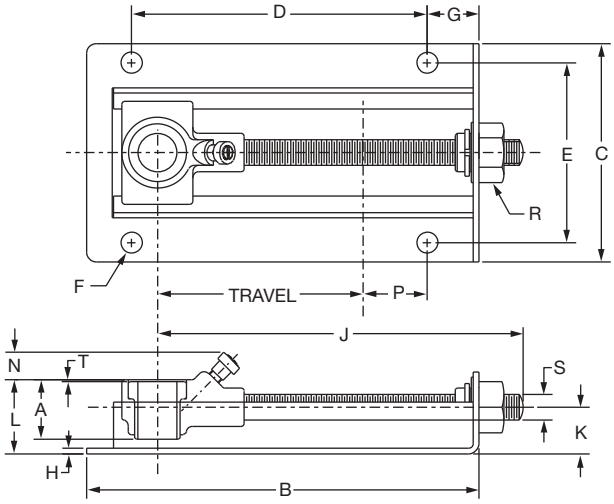

Shaft Size X Travel	Part Number	Description	Wt.	A	B	C	D	E
1/2 x 4	**034020**	BOTU-008X4	1.9	1-3/16	7-5/8	4-1/4	5-3/4	3-1/2
5/8 x 4	**034021**	BOTU-010X4	1.8					
3/4 x 4	**034022**	BOTU-012X4	1.7					
7/8 x 4	**034023**	BOTU-014X4	2.1	1-9/16	7-5/8	4-1/4	5-3/4	3-1/2
15/16 x 4	**034024**	BOTU-015X4	2.0					
1 x 4	**034025**	BOTU-100X4	1.9					

Shaft Size X Travel	F Bolt Dia.	G	H	J	K	L	N	P	R Hex. Size	S	T
1/2 x 4 5/8 x 4 3/4 x 4	3/8	1	7/64	7-1/8	29/32	1-7/16	1/2	1-1/4	1	1/2	1/16
7/8 x 4 15/16 x 4 1 x 4	3/8	1	7/64	7-1/8	29/32	1-5/8	5/16	1-1/4	1	1/2	1/16

BRONZOIL Take-Up Bearing Assembly					
Size	(TUBO---) Assy. No	1	2	3	4
1/2	**034030**	034001	405046	034013	444010
5/8	**034031**	034001	405046	034014	444010
3/4	**034032**	034001	405046	034015	444010
7/8	**034033**	034002	405046	034016	444010
15/18	**034034**	034002	405046	034017	444010
1	**034035**	034002	405046	034018	444010

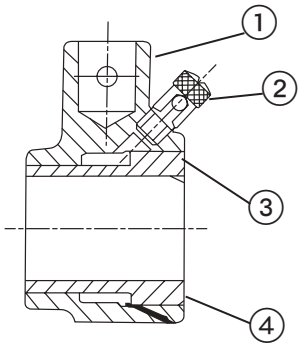

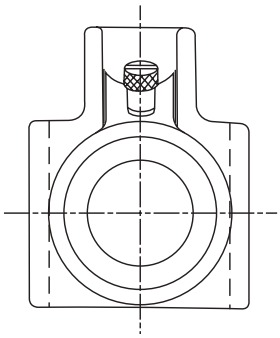

1. BRONZOIL Housing
2. BRONZOIL Take-Up Oil Cup
3. BRONZOIL Bushing
4. BRONZOIL Permawick

FEATURES/BENEFITS PAGE B19-2 | HOW TO ORDER/NOMENCLATURE PAGE B19-7 | SELECTION/DIMENSIONS PAGE B19-8



Take-Up Bearings - Type A & B





TYPE A & B TAKE-UP BEARINGS (Only) TYPE A & B TAKE-UP FRAMES DISCONTINUED

Shaft Size x Travel	Type A Take-Up Bearing		
	Part Number	Description	Wt.
15/16 x 5	**036180**	TUA-015-TUBRG	2.6
1 x 5	**036181**	TUA-100-TUBRG	2.5
1-3/15 x 5	**036182**	TUA-103-TUBRG	2.3
1-1/4 x 5	**036183**	TUA-104-TUBRG	2.2
1-7/16 x 6 1-7/16 x12	**036184**	TUA-107-TUBRG	3.5
1-11/16 x 6 1-11/16 x12	**036185**	TUA-111-TUBRG	4.1
1-15/16 x 9 1-15/16 x18	**036186**	TUA-115-TUBRG	6.7
2-3/16 x 9 2-3/16 x18	**036187**	TUA-203-TUBRG	10.1
2-7/16 x 9 2-7/16 x18	**036188**	TUA-207-TUBRG	8.8

Shaft Size x Travel	Type B Take-Up Bearing		
	Part Number	Description	Wt.
15/16 x 5	**036270**	TUB-015-TUBRG	3.6
1 x 5	**036193**	TUB-100-TUBRG	3.5
1-3/15 x 5	**036194**	TUB-103-TUBRG	3.3
1-1/4 x 5	**036274**	TUB-104-TUBRG	3.2
1-7/16 x 6 1-7/16 x 12	**036196**	TUB-107-TUBRG	4.7
1-11/16 x 6 1-11/16 x12	**036197**	TUB-111-TUBRG	5.4
1-15/16 x 9 1-15/16 x18	**036198**	TUB-115-TUBRG	8.6
2-3/16 x 9 2-3/16 x18	**036199**	TUB-203-TUBRG	12.7
2-7/16 x 9 2-7/16 x18	**036200**	TUB-207-TUBRG	11.4

SELECTION/DIMENSIONS

Take-Up Bearings - Type A & B

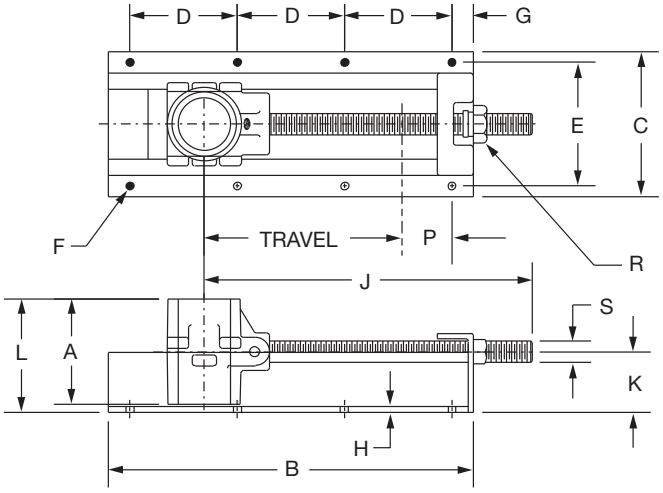

TYPE TUA

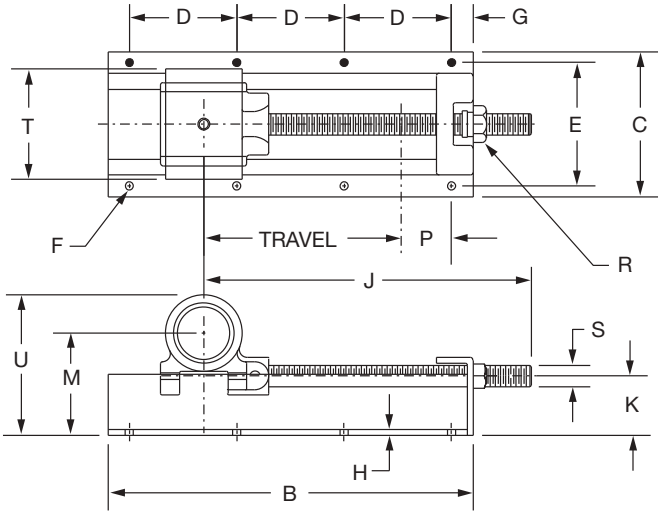

TYPE TUB

Shaft Size x Travel	A	B	C	D	E	F Bolt		G	H	J	K
						No.	Dia.				
15/16 x 5 1 x 5 1-3/16 x 5 1- 1/4 x 5	2-5/8	9-3/4	4-3/4	3-1/2	4	6	5/16	1-3/8	1/8	8-3/4	1-5/8
1-7/16 x 6 1-7/16 x 12	3-1/8	1218	5-3/45-3/4	55-1/4	4-3/44-3/4	68	3/33/8	11	3/163/16	10-1/216-1/2	22
1-11/16 x 6 1-11/16 x 12	3-3/8	1218	5-3/45-3/4	55-1/4	4-3/44-3/4	68	3/83/8	11	3/163/16	10-1/216-1/2	22
1-15/16 x 9 1-15/16 x 18	4-1/8	1726	6-3/46-3/4	56	5-3/45-3/4	810	3/83/8	11	1/41/4	14-1/223-1/2	2-3/42-3/4
2-3/16 x 9 2-3/16 x 18	4-7/8	1726	6-3/46-3/4	56	5-3/45-3/4	810	3/83/8	11	1/41/4	14-1/223-1/2	2-3/42-3/4
2-7/16 x 9 2-7/16 x 18	4-7/8	1726	6-3/46-3/4	56	5-3/45-3/4	810	3/83/8	11	1/41/4	14-1/223-1/2	2-3/42-3/4

Shaft Size x Travel	L	M	P	R Hex.	S	T	U	Grease Cup	
								Pipe Tap	Size
15/16 x 5 1 x 5 1-3/16 x 5 1- 1/4 x 5	3	2-3/4	1-5/8	1-5/16	3/4	2-7/8	3-27/32	1/8	0
1-7/16 x 6 1-7/16 x 12	3-5/8	3-3/83-3/8	2-1/22-1/2	1-1/2	7/8	3-3/8	4-19/32	1/4	0
1-11/16 x 6 1-11/16 x 12	3-3/4	3-5/83-5/8	2-1/22-1/2	1-1/2	7/8	3-5/8	4-31/32	1/4	0
1-15/16 x 9 1-15/16 x 18	4-7/8	4-1/24-1/2	3-3/83-3/8	1-5/8	1	4-3/8	6-1/32	1/4	1
2-3/16 x 9 2-3/16 x 18	5-1/4	4-3/44-3/4	3-1/83-1/8	1-5/8	1	5-1/8	6-17/32	1/4	1
2-7/16 x 9 2-7/16 x 18	5-1/4	4-3/44-3/4	3-3/83-3/8						

FEATURES/BENEFITS PAGE B19-2 | HOW TO ORDER/NOMENCLATURE PAGE B19-7 | SELECTION/DIMENSIONS PAGE B19-8

CONTENT

ENGINEERING/TECHNICAL

BEARING ENGINEERING SECTION

Vibration Frequencies of Anti-Friction Mounted Bearings B20-2
Bearing Life Adjustment Factors
(Rolling Element Bearings) B20-8

PT COMPONENT ENGINEERING SECTION

V-Belt Drive Formulas B20-10
V-Belt Cross Sections B20-11
Material Characteristics B20-12

GENERAL ENGINEERING SECTION

Shafting B20-14
Expansion of Shafting B20-19
Weights/Properties of Steel Shafting B20-20
Oil Viscosity Classification B20-22
English Standard Measurement B20-23
Metric System of Measurement & Conversions B20-26
Common Conversion Factors B20-28
Formulas and Constants B20-34
Centrifugal Force B20-35
Flywheel Formulas B20-35
Torque and Horsepower Equivalents B20-36
Overhung Loads B20-36
Mathematical Equations B20-36
Strength and Physical Properties of Various Metals B20-37
Properties of Sections B20-38
Coefficients of Friction (f) B20-39
Hardness Comparison B20-39
U.S. Standard Sheet Metal Gages B20-39
Trigonometric Formula B20-40
NEMA Quick Reference Chart B20-41
IEC Quick Reference Chart B20-42

Part Number Index INDEX-1
Keyword Index KEYWORD-1

Vibration Frequencies of DODGE Anti-Friction Mounted Bearings

More and more manufacturing facilities are getting involved with plant-wide preventive maintenance programs. By monitoring vibration levels of motors, pumps, fans and compressors, maintenance supervisors can predict imminent failures. Knowing that a piece of equipment is showing signs of potential failure permits scheduling of maintenance at an appropriate time and avoids the consequences of catastrophic failures. Shown in Tables 1 - 10 are vibration frequencies generated by bearing components defects. All frequencies are based on unity inner ring or cone rotation.

How to Use the Tables

If a 2-7/16 Type E pillow block is rotating at 1000 RPM, the vibration due to a failed component will show up at the following frequencies: (Table 3, Line 6)

Frequency

Cup Nick or Spall	= 1000 x 9.251	= 9251 RPM
Cone Nick or Spall	= 1000 x 11.749	= 11749 PM
*Roller Nick or Spall	= 1000 x 4.011 x 2	= 8022 RPM
Cage (Train) Frequency (Inner Ring Rotation)	= 1000 x 0.441	= 441 RPM

Since all the values in Tables 1 - 10 are based on unity inner ring or cone rotation, the vibration due to flaws will show up at the frequencies obtained by multiplying the RPM times the factors found on the appropriate table. The resulting product will have units of RPM.

Table 1: All Setscrew, Eccentric, D-LOK & GT Ball Bearing Parameters For Vibration Analysis (1-RPS)

Series	SC Bore	SCM Bore	# Balls	Diameter of Balls	Pitch Diameter	Outer Ring Frequency Hz	Inner Ring Frequency Hz	* Ball Spin Frequency Hz	Cage Frequency Hz
203	1/2 - 5/8		8	17/64	1.151	3.078	4.923	2.050	0.385
204	1/2 - 3/4		8	5/16	1.325	3.057	4.943	2.002	0.382
205	7/8 - 1		9	5/16	1.533	3.582	5.418	2.350	0.398
206	1-1/6 - 1-1/4	1	9	3/8	1.823	3.575	5.426	2.328	0.397
207	1-1/4 - 1-7/16	1-3/16	9	7/16	2.136	3.579	5.422	2.339	0.398
208	1-1/2 - 1-5/8	1-7/16 - 1-1/2	9	1/2	2.387	3.558	5.443	2.283	0.395
209	1-11/16 - 1-3/4	1-1/2	9	13/25	2.559	3.586	5.414	2.360	0.398
210	1-15/16 - 2	1-11/16 - 1-3/4	10	1/2	2.765	4.056	5.904	2.674	0.410
211	2-2-1/4	1-15/16 - 2	10	9/16	3.092	4.090	5.910	2.657	0.410
212	2-1/4 - 2-7/16	2-3/16 - 2-1/4	10	5/8	3.385	4.077	5.923	2.616	0.408
214	2-11/16	2-7/16 - 2-1/2	10	11/16	3.775	4.089	5.911	2.654	0.409
215	2-15/16	2-11/16	11	11/16	4.085	4.574	6.456	2.887	0.416
216		2-15/16 - 3	11	3/4	4.330	4.547	6.453	2.800	0.413
218		3-7/16 - 3-1/2	11	27/32	4.920	4.557	6.443	2.830	0.414

Table 2: Type E, K, DI, and TAF Tapered Roller Bearing Parameters For Vibration Analysis (1-RPS)

Bore Size	# Rollers Per Row	Mean Diameter of Rollers	Pitch Diameter	Contact Angle	Cup Frequency Hz	Cone Frequency Hz	* Roller Spin Frequency Hz	Cage Frequency Hz
1-3/16 - 1-1/4	19	0.23	1.774	17.533	8.326	10.675	3.798	0.438
1-3/8 - 1-7/16	20	0.29	2.084	16.500	8.666	11.334	3.529	0.433
1-1/2 - 1-11/16	18	0.35	2.411	16.000	7.744	10.256	3.377	0.430
1-3/4 - 2	17	0.41	2.709	12.033	7.241	9.758	3.231	0.426
2-3/16	19	0.41	3.014	13.283	8.242	10.758	3.611	0.434
2-1/4 - 2-1/2	21	0.41	3.337	14.500	9.251	11.749	4.012	0.441
2-11/16 - 3	24	0.41	3.900	16.733	10.792	13.208	4.708	0.450
3-3/16 - 3-1/2	26	0.46	4.780	18.167	11.811	14.189	5.152	0.454
3-15/16 - 4	26	0.51	5.120	17.567	11.766	14.235	4.974	0.453
4-7/16 - 4-1/2	25	0.59	5.727	18.983	11.282	13.718	4.807	0.451
4-15/16 - 5	25	0.68	6.568	17.000	11.262	13.738	4.782	0.455
5-7/16 - 6	32	0.67	8.444	17.750	14.791	17.209	6.266	0.462
6-7/16 - 7	27	0.93	9.791	19.167	12.289	14.711	5.222	0.455

Cup Frequency = N * RPM * (1 - (Bd * cos a / Pd)) / 120

Cone Frequency = N * RPM * (1 + (Bd * cos a / Pd)) / 120

Roller Spin Frequency = Pd * RPM * (1 - (Bd * cos a / Pd) ^2) / (120 * Bd)

Cage Frequency = RPM * (1 - (Bd * cos a / Pd)) /120

Pd = Pitch Diameter

N = Number of rollers

Bd = Roller Diameter

a = Cup Angle (contact angle)

Table 3: Type C Tapered Roller Bearing Parameters For Vibration Analysis (1-RPS)

Bore Size	# Rollers Per Row	Mean Diameter of Rollers	Pitch Diameter	Contact Angle	Cup Frequency Hz	Cone Frequency Hz	* Roller Spin Frequency Hz	Cage Frequency Hz
1-3/16 - 1-7/16	19	0.31	2.251	14.92	8.236	10.764	3.566	0.433
1-1/2 - 1-3/4	21	0.32	2.604	11.50	9.236	11.764	4.010	0.440
1-15/16	22	0.33	2.848	15.00	9.769	12.231	4.261	0.444
2 - 2-1/4	21	0.40	3.335	16.83	9.295	11.705	4.114	0.443
2-3/16 - 2-7/16	25	0.35	3.533	18.00	11.322	13.678	5.002	0.453
2-1/2 - 2-11/16	23	0.43	3.827	16.50	10.261	12.739	4.399	0.446
2-7/16 - 2-15/16	26	0.42	4.220	16.50	11.759	14.241	4.978	0.452
3 - 3-3/16	22	0.55	4.612	16.50	9.742	12.258	4.138	0.443
3-1/4 - 3-7/16	24	0.51	4.761	16.42	10.767	13.233	4.618	0.449
3-1/2 - 4	25	0.59	5.727	18.98	11.282	13.718	4.807	0.4513
4-7/16 - 4-1/2	33	0.46	3.109	11.50	14.108	18.892	3.308	0.428
4-15/16 - 5	26	0.68	6.983	18.00	11.796	14.204	5.091	0.4537

Cup Frequency = N * RPM * (1 - (Bd * cos a / Pd)) / 120

Cone Frequency = N * RPM * (1 + (Bd * cos a / Pd)) / 120

Roller Spin Frequency = Pd * RPM * (1 - (Bd * cos a / Pd) ^2) / (120 * Bd)

Cage Frequency = RPM * (1 - (Bd * cos a / Pd)) /120

Pd = Pitch Diameter

N = Number of rollers

Bd = Roller Diameter

a = Cup Angle (contact angle)

*** Note:** Ball and Roller Spin Frequencies are listed at one (1X) roller spin frequency. For thorough analysis it is important to check frequency level at two (2X) rotational speed of balls or rollers as this is the frequency that a single ball/roller defect will contact the raceways of the bearing. In other words, a ball/roller defect will strike both inner and outer ring in one revolution of the roller.

ENGINEERING

Type 4: Special Duty Tapered Roller Bearing Parameters For Vibration Analysis (1-RPS)

Bore Size	# Rollers Per Row	Mean Diameter of Rollers	Pitch Diameter	Contact Angle	Cup Frequency Hz	Cone Frequency Hz	Roller Spin Frequency Hz	Cage Frequency Hz
1-3/8 - 1-1/2	21	0.32	2.603	11.50	9.2384	11.7616	4.0188	0.4399
1-9/16 - 1-3/4	26	0.32	3.061	16.00	11.6930	14.3070	4.7323	0.4497
1-7/8 - 2	27	0.32	3.267	17.00	12.2349	14.7651	5.0578	0.4531
2-1/8 - 2-1/4	25	0.35	3.533	18.00	11.3174	13.6826	4.9813	0.4527
2-3/8 - 2-1/2	29	0.35	3.828	18.77	13.2454	15.7546	5.4304	0.4567
2-5/8 - 3	26	0.48	4.572	10.17	11.6498	14.3502	4.6873	0.4481
3-3/16 - 3-1/2	27	0.56	5.541	16.00	12.1840	14.8160	4.8838	0.4513
3-11/16 - 4	23	0.68	6.103	15.88	10.2627	12.7373	4.4180	0.4462
4-7/16 - 4-1/2	26	0.68	6.983	18.00	11.7910	14.2090	5.0689	0.4535
4-15/16 - 5	30	0.75	7.896	17.00	13.6369	16.3631	5.2181	0.4546
5-7/16 - 6	24	0.93	9.123	17.33	10.8322	13.1678	4.8584	0.4513
6-1/2 - 7	29	0.93	10.190	19.23	13.2505	15.7495	5.4378	0.4569
7-15/16 - 8	27	1.12	11.471	12.42	12.2127	14.7873	5.0744	0.4523
8-1/2 - 10	41	0.87	13.979	16.40	19.2761	21.7239	8.0053	0.4701
11 - 12	37	1.20	16.061	12.50	17.1505	19.8495	6.6565	0.4635

Cup Frequency = N * RPM * (1 - (Bd * cos a / Pd)) / 2
Cone Frequency = N * RPM * (1 + (Bd * cos a / Pd)) / 2
Roller Spin Frequency = Pd * RPM * (1 - (Bd * cos a / Pd) ^2) / (2 * Bd)
Cage Frequency = RPM * (1 - (Bd * cos a / Pd)) / 2

Pd = Pitch Diameter
N = Number of rollers
Bd = Roller Diameter
a = Cup Angle (contact angle)

Table 5: All Steel Tapered Roller Bearing Parameters For Vibration Analysis (1-RPS

Bore Size	# Rollers Per Row	Mean Diameter of Rollers	Pitch Diameter	Contact Angle	Cup Frequency Hz	Cone Frequency Hz	* Roller Spin Frequency Hz	Cage Frequency Hz
2-11/16 - 3	27	0.36	4.114	15.50	12.362	14.638	5.673	0.458
3-1/4 - 3-1/2	26	0.51	5.120	17.57	11.766	14.235	4.974	0.453
3-15/16 - 4	33	0.48	5.814	12.50	15.170	17.830	6.017	0.460
4-7/16 - 4-1/2	29	0.60	6.503	12.92	13.196	15.804	5.375	0.455
4-15/16 - 5	32	0.61	7.355	12.50	14.705	17.296	5.989	0.460
5-7/16	27	0.84	8.272	12.00	12.159	14.841	4.875	0.450
5-15/16 - 6	26	0.85	8.323	12.00	11.701	14.300	4.847	0.450
6-7/16 - 7	32	0.81	9.748	12.50	14.702	17.300	5.978	0.459
7-1/2 - 8	27	1.12	11.471	12.42	12.213	14.787	5.074	0.452
9 - 10	32	1.28	14.026	12.03	14.572	17.428	5.435	0.455

Cup Frequency = N * RPM * (1 - (Bd * cos a / Pd)) / 120
Cone Frequency = N * RPM * (1 + (Bd * cos a / Pd)) / 120
Roller Spin Frequency = Pd * RPM * (1 - (Bd * cos a / Pd) ^2) / (120 * Bd)
Cage Frequency = RPM * (1 - (Bd * cos a / Pd)) / 120

Pd = Pitch Diameter
N = Number of rollers
Bd = Roller Diameter
a = Cup Angle (contact angle)

*** Note:** Ball and Roller Spin Frequencies are listed at one (1X) roller spin frequency. For thorough analysis it is important to check frequency level at two (2X) rotational speed of balls or rollers as this is the frequency that a single ball/roller defect will contact the raceways of the bearing. In other words, a ball/roller defect will strike both inner and outer ring in one revolution of the roller.

Table 6: S-2000, UNISPHERE II and Imperial Spherical Roller Bearing Parameters for Vibration Analysis (1-RPS)

Basic Bearing Series	S-2000 Bore Size (in)	UNISPHERE II Bore Size (in)	Imperial Bore Size (in)	No. of Rollers	Mean Dia. Of Rollers	Pitch Dia.	Contact Angle	Outer Ring Frequency Hz	Inner Ring Frequency Hz	* Roller Spin Frequency Hz	Cage Frequency Hz
22208	1-3/8 - 1-1/2	1-7/16 - 1-1/2	1-1/8 - 1-1/2	15	0.449	2.449	10.583	6.149	8.851	2.640	0.410
22209	1-11/16 - 1-3/4	1-11/16 - 1-3/4	1-5/8 - 1-3/4	17	0.429	2.665	9.750	7.151	9.849	3.027	0.421
22210	1-15/16 - 2	1-15/16 - 2	1-7/8 - 2	18	0.433	2.858	9.083	7.653	10.347	3.226	0.425
22211	2-3/16	2-3/16	2-3/16 - 2-1/4	19	0.465	3.189	8.750	8.132	10.868	3.361	0.428
22213	2-7/16	2-7/16 - 2-1/2	2-3/8 - 2-1/2	18	0.583	3.795	9.083	7.635	10.365	3.182	0.424
22215	2-11/16 - 3	2-11/16 - 3	2-11/16 - 3	20	0.575	4.197	8.250	8.645	11.355	3.584	0.432
22218	3-7/16	3-7/16 - 3-1/2	3-3/16 - 3-1/2	18	0.780	5.079	8.833	7.635	10.365	3.183	0.424
22220	3-15/16 - 4	3-15/16 - 4	3-11/16 - 4	18	0.878	5.705	9.000	7.632	10.368	3.174	0.424
22222	4-7/16		4-7/16 - 4-1/2	17	1.020	6.287	9.417	7.140	9.860	3.004	0.420
22226	4-15/16		4-15/16 - 5	18	1.118	7.307	9.750	7.643	10.357	3.193	0.425
22228			5-7/16 - 5-1/2	18	1.217	7.933	9.583	7.639	10.361	3.186	0.424
22232			5-15/16 - 6	18	1.409	9.189	9.667	7.639	10.361	3.185	0.424
22236			6-7/16 - 7	18	1.559	10.157	9.417	7.637	10.363	3.183	0.424

Table 7: USAF and SAF-XT Spherical Roller Bearing Parameters for Vibration Analysis (1-RPS)

Basic Bearing Series	USAF/SAF-XT Bore Sizes (in)	No. Of Rollers	Mean Dia. Of Rollers	Pitch Dia.	Contact Angle	Outer Ring Frequency Hz	Inner Ring Frequency Hz	* Roller Spin Frequency Hz	Cage Frequency Hz
22209	1-7/16	18	0.408	2.626	9.633	7.623	10.377	3.147	0.424
22210	1-11/16	19	0.415	2.819	8.917	8.120	10.880	3.328	0.427
22211	1-15/16	19	0.465	3.097	8.833	8.092	10.908	3.260	0.426
22213	2-3/16	20	0.534	3.761	9.117	8.599	11.401	3.456	0.430
22215	2-7/16 - 2-1/2	20	0.587	4.093	8.433	8.582	11.418	3.419	0.429
22216	2-11/16 - 2-3/4	20	0.622	4.410	8.333	8.604	11.396	3.475	0.430
22217	2-15/16 - 3	20	0.679	4.723	8.367	8.578	11.422	3.409	0.429
22218	3-3/16	20	0.702	5.024	8.917	8.620	11.380	3.510	0.431
22220	3-7/16 - 3-1/2	19	0.823	5.609	8.917	8.123	10.877	3.336	0.428
22222	3-15/16 - 4	18	0.979	6.185	9.583	7.595	10.405	3.082	0.422
22224	4-3/16	19	0.999	6.700	9.633	8.103	10.897	3.280	0.426
22226	4-7/16 - 4-1/2	19	1.071	7.205	9.950	8.109	10.891	3.292	0.427
22228	4-15/16 - 5	18	1.217	7.933	9.583	7.639	10.361	3.186	0.424
22230	5-3/16	18	1.315	8.559	9.500	7.636	10.364	3.180	0.424
22232	5-7/16 - 5-1/2	18	1.409	9.189	9.667	7.639	10.361	3.185	0.424
22234	5-15/16 - 6	17	1.583	9.740	9.833	7.139	9.861	2.998	0.420
22236	6-7/16 - 6-1/2	18	1.559	10.157	9.417	7.637	10.363	3.183	0.424
22238	6-15/16 - 7	20	1.496	10.669	10.667	8.622	11.378	3.498	0.431
22240	7-3/16	19	1.614	11.021	10.833	8.133	10.867	3.343	0.428
22244	7-1/2 - 8	19	1.850	12.480	10.833	8.117	10.883	3.301	0.427
23048	8-7/16 - 9	29	1.142	12.008	9.333	13.140	15.860	5.213	0.453
23052	9-7/16 - 9-1/2	27	1.378	13.228	9.667	12.114	14.886	4.749	0.449
23056	9-15/16 - 10-1/2	28	1.378	13.976	9.333	12.638	15.362	5.023	0.451

*** Note:** Ball and Roller Spin Frequencies are listed at one (1X) roller spin frequency. For thorough analysis it is important to check frequency level at two (2X) rotational speed of balls or rollers as this is the frequency that a single ball/roller defect will contact the raceways of the bearing. In other words, a ball/roller defect will strike both inner and outer ring in one revolution of the roller.

ENGINEERING

DODGE

Table 8: DODGE USAF Air Handling Spherical Roller Bearing Parameters For Vibration Analysis (1-RPS)

Bore Size	Basic Bearing Series	# Rollers Per Row	Diameter of Rollers	Pitch Diameter	Contact Angle	Outer Ring Frequency Hz	Inner Ring Frequency Hz	*Roller Spin Frequency Hz	Cage Frequency Hz
1-7/16	22209E1K	17	0.3937	2.5976	10.0000	7.231	9.769	3.226	0.425
1-11/16	22210E1K	19	0.3937	2.7976	9.2500	8.180	10.820	3.484	0.431
1-15/16	22211E1K	18	0.4528	3.0921	8.9200	7.698	10.302	3.343	0.428
2-3/16	22213E1K	19	0.5315	3.7110	9.2500	8.157	10.843	3.421	0.429
2-7/16 - 2-1/2	22215E1K	21	0.5315	4.1098	8.3300	9.156	11.846	3.803	0.436
2-11/16 - 2-3/4	22216E1K	20	0.5709	4.3638	8.2500	8.705	11.295	3.758	0.435
2-15/16 - 3	22217E1K	20	0.6299	4.6811	8.5000	8.669	11.331	3.650	0.434
3-3/16	22218E1K	20	0.6693	4.9602	8.8300	8.667	11.333	3.640	0.433
3-7/16 - 3-1/2	22220E1K	19	0.7677	5.5606	9.0000	8.205	10.795	3.554	0.432
3-15/16 - 4	22222E1K	19	0.8661	6.1559	9.4200	8.181	10.819	3.485	0.431
4-3/16	22224E1K	19	0.9252	6.6382	9.5800	8.194	10.806	3.520	0.431
4-7/16 - 4-1/2	22226E1K	19	0.9843	7.1358	9.9200	8.209	10.791	3.558	0.432
4-15/16 - 5	22228E1K	19	1.0630	7.7232	9.6700	8.211	10.789	3.566	0.432

Outer Ring Frequency = N * RPM * (1 - (Bd * cos a / Pd)) / 120
Inner Ring Frequency = N * RPM * (1 + (Bd * cos a / Pd)) / 120
Roller Spin Frequency = Pd * RPM * (1 - (Bd * cos a / Pd) ^2) / (120 * Bd)
Cage Frequency = RPM * (1 - (Bd * cos a / Pd)) / 120

Pd = Pitch Diameter
N = Number of rollers
Bd = Roller Diameter
a = Contact Angle

Table 9: Split-Spherical Roller Bearing Parameters For Vibration Analysis

Bore Size	Basic Bearing Series	# Rollers Per Row	Diameter Of Rollers	Pitch Diameter	Contact Angle	Outer Ring Frequency Hz	Inner Ring Frequency Hz	*Roller Spin Frequency Hz	Cage Frequency Hz
2-3/16	22213SS	17	0.559	3.414	9.000	7.125	9.875	2.973	0.419
2-7/16	22215SS	18	0.551	3.748	9.083	7.693	10.307	3.328	0.427
2-11/16	22216SS	19	0.579	3.950	8.667	8.124	10.876	3.341	0.428
2-15/16	22217SS	20	0.575	4.153	8.250	8.630	11.370	3.545	0.431
3-3/16	22218SS	19	0.654	4.435	8.167	8.114	10.886	3.321	0.427
3-7/16	22220SS	18	0.780	5.079	8.833	7.635	10.365	3.183	0.424
3-15/16 - 4	22222SS	18	0.878	5.634	9.000	7.615	10.385	3.132	0.423
4-3/16	22224SS	17	1.110	6.203	9.417	7.000	10.000	2.708	0.412
4-7/16 - 4-1/2	22226SS	18	1.047	6.727	9.417	7.618	10.382	3.136	0.423
4-15/16	22228SS	18	1.118	7.202	9.750	7.623	10.377	3.145	0.424
5-3/16	22230SS	18	1.217	7.822	9.583	7.620	10.380	3.139	0.423
5-7/16	22232SS	18	1.315	8.442	9.500	7.617	10.383	3.134	0.423
5-15/16 - 6	22234SS	18	1.409	9.059	9.667	7.620	10.380	3.138	0.423
6-7/16 - 6-1/2	22236SS	18	1.409	9.059	9.667	7.620	10.380	3.138	0.423
6-15/16 - 7	22238SS	18	1.559	10.021	9.417	7.619	10.381	3.138	0.423
7-3/16	22240SS	16	1.579	10.716	9.417	6.837	9.163	3.322	0.427
7-1/2 - 8	22244SS	16	1.752	11.257	9.500	6.772	9.228	3.137	0.423
8-1/2 - 9	23048SS	20	1.307	11.189	8.083	8.843	11.157	4.223	0.442
9-1/2	23052SS	22	1.339	11.949	8.417	9.781	12.219	4.408	0.445
10	23056SS	20	1.539	13.175	8.667	8.845	11.155	4.222	0.442

Outer Ring Frequency = N * RPM * (1 - (Bd * cos a / Pd)) / 12
Olnner Ring Frequency = N * RPM * (1 + (Bd * cos a / Pd)) / 120
Roller Spin Frequency = Pd * RPM * (1 - (Bd * cos a / Pd) ^2) / (120 * Bd)
Cage Frequency = RPM * (1 - (Bd * cos a / Pd)) / 120

Pd = Pitch Diameter
N = Number of rollers
Bd = Roller Diameter
a = Contact Angle

*** Note:** Ball and Roller Spin Frequencies are listed at one (1X) roller spin frequency. For thorough analysis it is important to check frequency level at two (2X) rotational speed of balls or rollers as this is the frequency that a single ball/roller defect will contact the raceways of the bearing. In other words, a ball/roller defect will strike both inner and outer ring in one revolution of the roller.

Table 10: USDAF Spherical Roller Bearing Parameters For Vibration Analysis (1-RPS)

Bore Size	Basic Bearing Series	# Rollers Per Row	Diameter of Rollers	Pitch Diameter	Contact Angle	Outer Ring Frequency Hz	Inner Ring Frequency Hz	* Roller Spin Frequency Hz	Cage Frequency Hz
10-15/16 - 11	23060K	27	1.575	15.066	9.500	12.108	14.892	4.732	0.448
11-7/16 - 12	23064K	28	1.575	15.850	9.333	12.627	15.373	4.983	0.451
12-7/16 - 12-1/2	23068K	27	1.732	17.007	9.500	12.144	14.856	4.860	0.450
12-15/16 - 13-1/2	23072K	28	1.732	17.793	9.333	12.655	15.345	5.089	0.452
13-15/16 - 14	23076K	30	1.732	18.587	9.000	13.620	16.381	5.320	0.454
15	23080K	29	1.929	19.822	9.167	13.107	15.893	5.091	0.452
15-3/4	23084K	30	1.929	20.609	9.000	13.613	16.387	5.296	0.454
9-7/16 - 9-1/2	23152K	23	1.693	13.914	12.500	10.134	12.866	4.051	0.441
10-7/16 - 10-1/2	23156K	24	1.732	14.711	12.000	10.618	13.382	4.191	0.442
10-15/16 - 11	23160K	23	1.89	15.923	12.333	10.167	12.834	4.156	0.442
11-15/16 - 12	23164K	23	2.087	17.044	12.833	10.127	12.873	4.025	0.440
12-7/16 - 12-1/2	23168K	23	2.244	18.272	12.833	10.123	12.877	4.013	0.440
13-7/16 - 13-1/2	23172K	24	2.244	19.077	12.333	10.621	13.379	4.195	0.443
13-15/16 - 14	23176K	25	2.323	19.833	12.000	11.068	13.932	4.213	0.443
8-15/16 - 9	23248K	20	1.929	13.523	14.000	8.616	11.384	3.438	0.431
9-7/16 - 9-1/2	23252K	19	2.126	14.745	14.000	8.171	10.829	3.400	0.430
10-7/16 - 10-1/2	23256K	20	2.126	15.537	13.583	8.670	11.330	3.590	0.434
10-15/16 - 11	23260K	20	2.323	16.706	13.833	8.650	11.350	3.530	0.433
11-15/16 - 12	23264K	20	2.441	17.878	14.000	8.675	11.325	3.598	0.434
12-7/16 - 12-1/2	23268K	20	2.638	19.048	14.167	8.657	11.343	3.545	0.433

Outer Ring Frequency = N * RPM * (1 - (Bd * cos a / Pd)) / 120
Inner Ring Frequency = N * RPM * (1 + (Bd * cos a / Pd)) / 120
Roller Spin Frequency = Pd * RPM * (1 - (Bd * cos a / Pd) ^2) / (120 * Bd)
Cage Frequency = RPM * (1 - (Bd * cos a / Pd)) / 120

Pd = Pitch Diameter
N = Number of rollers
Bd = Roller Diameter
a = Contact Angle

*** Note:** Ball and Roller Spin Frequencies are listed at one (1X) roller spin frequency. For thorough analysis it is important to check frequency level at two (2X) rotational speed of balls or rollers as this is the frequency that a single ball/roller defect will contact the raceways of the bearing. In other words, a ball/roller defect will strike both inner and outer ring in one revolution of the roller.

Mounted Bearings Life Adjustment Factor

1.1 GENERAL. For certain applications, it is desirable to specify life for reliability other than 90%. In such cases a life adjustment factor for reliability may be applied to the RATING LIFE. Section 1.2 discusses life adjustment factors for reliability.

Some bearing steels; e.g., vacuum-melted steels, and improved processing techniques, permit manufacture of bearings which offer endurance greater than that calculated by the RATING LIFE formula. Section 1.3 recommends methods to incorporate life adjustment factors for bearing materials into the life formula.

Bearing life calculated according to the RATING LIFE formula assumes proper application conditions. If lubrication is not adequate, loading unusual, or temperatures extreme, the ability of the bearing to attain or exceed the RATING LIFE is seriously impaired. Section 1.4 contains some basic recommendations concerning the effect of unusual application conditions on bearing life.

1.2 LIFE ADJUSTMENT FACTOR FOR RELIABILITY. Bearing life estimated in accordance with this standard is RATING LIFE; i.e., the life associated With 90% reliability or the life which 90% of a group of apparently identical bearings in a given application under similar conditions of load and speed will complete or exceed. While RATING LIFE has proven useful over a period of years as a criterion of performance, some applications require definition of life at reliabilities greater than 90%.

To determine bearing life with reliabilities other than 90% (as previously calculated in the Selection Procedure) the L_{10} must be adjusted by factor a_1, such that $L_n=a_1$ x L10.

The life adjustment factors for reliability from Table 11 are recommended.

Table 11: Life Adjustment Factors For Reliability

Reliability %	Ln		Life Adjustment Factor for Reliability a1
90	L10		1
95	L5		0.62
96	L4	(Rating Life)	0.53
97	L3		0.44
98	L2		0.33
99	L1		0.21

1.3 LIFE ADJUSTMENT FACTOR FOR MATERIAL. For bearings, which incorporate improved materials and processing, the L_{10} (as previously calculated in the Selection Procedure) must be adjusted by factor a_2. Factor a_2 depends upon steel analysis, metallurgical processing, forming methods, heat treatment and manufacturing methods in general.

Bearings fabricated from consumable vacuum remelted steels and certain other special analysis steels have demonstrated extraordinarily long endurance. These steels are of exceptionally high quality, and bearings fabricated from these are usually considered special manufacture. As such, a_2 values will not be specified for such steels in this discussion. Generally, a_2 values for such steels can be obtained from the bearing manufacturer.

Mounted Bearings Life Adjustment Factor

1.4 LIFE ADJUSTMENT FACTOR FOR APPLICATION CONDITIONS. Application conditions which affect bearing life include:

1. Lubrication.
2. Load distribution (including effects of clearance, misalignment, housing, and shaft stiffness, type of loading and thermal gradients).
3. Temperature.
   Consideration of (1.2) and (1.3) above requires analytical and experimental techniques beyond the scope of this discussion, therefore, the user should consult the bearing manufacturer for evaluations and recommendations.
   In most bearing applications, lubrication serves to separate the rolling surfaces; i.e., rolling elements and raceways; to reduce retainer-rolling elements and retainer-land friction and sometimes to act as a coolant to remove frictional heat generated by the bearing.
   If all limitations and qualifications specified by this discussion are observed, then the life adjustment application factor for bearings which are adequately lubricated is 1; i.e., a_3=1.
   Operating conditions where a_3 might be less than 1 include:
   a) Exceptionally low values of Ndm (rpm times bore diameter in mm); e.g., Ndm 1000.
   b) Lubricant viscosity less than 20.4 centistokes (100 SUS) at operating temperature.
   c) Excessively high operating temperatures.
   When a3 is less than 1, it may not be assumed that the deficiency in lubrication can be overcome by using an improved steel.

1.5 FACTOR COMBINATIONS. A fatigue life formula including the life adjustment factors is:

Ball Bearings:

$$L_n = a_1 \times a_2 \times a_3 \left(\frac{C^*}{P}\right)^3 \times \frac{(16.667)}{RPM}$$

Tapered Roller Bearings:

$$L_n = a_1 \times a_2 \times a_3 \left(\frac{C90^*}{P}\right)^{10/3} \times \frac{(1{,}500{,}000)}{RPM}$$

Spherical Roller Bearings:

$$L_n = a_1 \times a_2 \times a_3 \left(\frac{C^*}{P}\right)^{10/3} \times \frac{(16.667)}{RPM}$$

Indiscriminate application of the life adjustment factors in this formula may lead to serious over-estimation of bearing endurance, since fatigue life is only one criterion for bearing selection.

Care must be exercised to select bearings which are of sufficient size for the application. Undersizing of shaft and housing structures by using bearings which appear adequate from a life standpoint could lead to misalignment and fitting problems which could invalidate the formulas in this discussion.

* C = Basic Load Rating computed in accordance with ABMA-ANSI Standards. C90 = C x .259

ENGINEERING

V-Belt Drive Formulas

V-belt tensioning In cases where tensioning of a drive effects belt pull and bearing loads, the following formulas may be used.

$$T_1 - T_2 = 33{,}000 \left(\frac{HP}{V}\right)$$

where: T_1 = tight side tension, pounds
T_2 = slack side tension, pounds
HP = design horsepower
V = belt speed, feet per minute

$$T_1 + T_2 = 33{,}000\ (2.5\text{-}G) \left(\frac{HP}{GV}\right)$$

where: T_1 = tight side tension, pounds
T_2 = slack side tension, pounds
HP = design horsepower
V = belt speed, feet per minute"
G = arc of contact correction factor*

$$T_1/T_2 = \frac{1}{1\text{-}0.8G} \quad (\text{Also } T1/T2 = e^{K\emptyset})$$

where: T_1 = tight side tension, pounds
T_2 = slack side tension, pounds
G = arc of contact correction factor*
e = base of natural logarithms
K = .51230, a constant for V-belt drive design
Ø = arc of contact in radians

$$T_1 = 41{,}250\ (HP/GV)$$

where: T_1 = tight side tension, pounds
HP = design horsepower
V = belt speed, feet per minute
G = arc of contact correction factor

$$T_2 = 33{,}000\ (1.25\text{-}G)\ (HP/GV)$$

where: T_2 = slack side tension, pounds
HP = design horsepower
V = belt speed, feet per minute
G = arc of contact correction factor

Belt Speed

$$V = \frac{(PD)\ (RPM)}{3.82} = (PD)\ (rpm)\ (.262)$$

where: V = belt speed, feet per minute
PD = pitch diameter of sheave or pulley
rpm = revolutions per minute of the same sheave or pulley

* See Table 12 at left

Table 12: Arc of Contact Correction Factor G

D-d / C	Small Sheave Arc of Contact	Factor G	D-d / C	Small Sheave Arc of Contact	Factor G
.00	180°	1.00	.80	133°	.87
.10	174°	.99	.90	127°	.85
.20	169°	.97	1.00	120°	.82
.30	163°	.96	1.10	130°	.80
.40	157°	.94	1.20	106°	.77
.50	151°	.93	1.30	99°	.73
.60	145°	.91	1.40	91°	.70
.70	139°	.89	1.50	83°	.65

D = Diam. of large sheave. d = Diam. of small sheave
C = Center distance

Table 13: Allowable Sheave Rim Speed

Sheave Material	Rim Speed in Feet per Minute
Cast Iron	6,500
Ductile Iron	8,000
Steel	10,000

NOTE: Above rim speed values are maximum for normal considerations. In some cases these values may be exceeded. Consult factory and include complete details of proposed application.

$$\text{Dynamic balance RPM for Sheave/Sprocket} \lozenge = \frac{15600}{\sqrt{\text{Dia x Face Width}}}$$

◊ **Note:** MPTA recommends Dynamic balance when application RPM exceeds this value.

Bearing Load Calculations

To find actual bearing loads, it is necessary to know machine component weights and values of all other forces contributing to the load. Sometimes it becomes desirable to know the bearing load imposed by the V-belt drive alone. This can be done if you know bearing spacing with respect to the sheave center and shaft load and apply it to the following formulas:

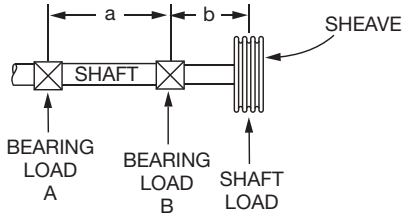

Overhung Sheave

$$\text{Load at B, lbs.} = \frac{\text{Shaft Load x (a + b)}}{a}$$

$$\text{Load at A, lbs} = \text{Shaft Load x } \frac{b}{a}$$

Where: a and b = Spacing, inches

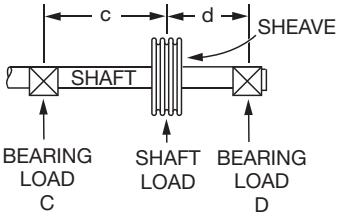

Sheave Between Bearings

$$\text{Load at D, lbs.} = \frac{\text{Shaft Load x c}}{c + d}$$

$$\text{Load at C, lbs} = \frac{\text{Shaft Load x d}}{c + d}$$

Where: c and d = Spacing, inches

Nominal V-Belt Cross Sections

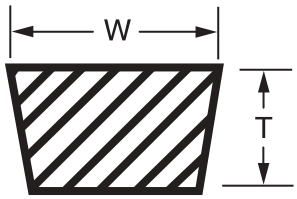

Table 14: Nominal V-Belt Cross Sections

Belt Section	Industry Standard Description	Width W, in Inches	Thickness T, in Inches
3L	FHP, Single	3/8	7/32
4L		1/2	5/16
5L		21/32	3/8
3V	Narrow	3/8	5/16
5V		5/8	17/32
8V		1	29/32
A	Classical Multiple	1/2	5/16
B		21/32	13/32
C		7/8	17/32
D		1-1/4	3/4

Table 15: Maximum Pulley RPM*

Pulley Dia. Inches	FPM												
	100	150	200	250	300	350	400	500	600	700	800	900	1000
6	64	95	127	159	191	223	254	318	382	445	509	573	636
8	48	72	95	119	143	167	191	239	286	334	382	429	477
10	38	57	76	95	115	134	153	191	229	267	305	344	382
12	32	48	64	80	95	111	127	159	191	223	254	286	318
14	27	41	55	68	82	95	109	136	164	191	218	245	273
16	24	36	48	60	72	83	95	119	143	167	191	215	239
18	21	32	42	53	64	74	85	106	127	148	170	191	212
20	19	29	38	48	57	67	76	95	115	134	153	172	191
24	16	24	32	40	48	56	64	80	95	111	127	143	159
30	13	19	25	32	38	45	51	64	76	89	102	115	127
36	11	16	21	27	32	37	42	53	64	74	85	95	106
42	9	14	18	23	27	32	36	45	55	64	73	82	91
48	8	12	16	20	24	28	32	40	48	56	64	72	80
54	7	11	14	18	21	25	28	35	42	49	57	64	71
60	6	10	13	16	19	22	25	32	38	45	51	57	64

* Maximum RPM values shown are based on 6,500 feet per minute for standard cast iron products. For higher rim speeds, contact Dodge Technical Support at 1-864-284-5700
For values not shown use formula below:

$$\text{Max RPM} = \frac{6{,}500}{.2618 \times D}$$

D = Pulley Diameter, Inches

ENGINEERING

Table 16: Material Characteristics

MATERIAL	DENSITY (LB/fT3)	ANGLE OF REPOSE (DEG)	RECOMMENDED MAXIMUM INCLINATION
Alfalfa, Ground	16	45°	
Alum, Lumpy	50 - 60	35°	
Alum, Pulverized	45 - 50	35°	
Alumina	60	30°	10-12
Aluminum Oxide	70 - 120	30°	
Ammonium Sulphate	45 - 60	45°	
Asbestos, Shredded	20 - 25	45°	
Ashes, Dry	35 - 40	45°	
Ashes, Wet	45 - 50	45°	
Ashes, Soft Coal	35 - 45	40°	
Asphalt, Crushed	45	35°	
Bagasse	7.50	45°	
Bakelite, Powder	30 - 40	45°	
Baking Powder	40 - 50	35°	
Bark, Wood Refuse	10 - 20	45°	27
Barley	38	25°	10-15
Basalt	80 - 120	25°	
Bauxite, Crushed	75 - 85	35°	20
Beans, Castor, Whole	30 - 45	25°	8-10
Beans, Cocoa	30 - 45	35°	
Beans, Navy	50	25°	
Beans, Whole	45	45°	
Bentonite, Crude	35 - 40	45°	
Bentonite, Fine	50 - 60	45°	
Bones, Pulverized	50 - 60	45°	
Borax, Fine	50 - 55	35°	
Borax Coarse	60 - 70	35°	
Bran	16	35°	
Brewers Grain, Dry	25 - 35	45°	
Brewers Grain, Wet	55 - 60	45°	
Buck Wheat	40	25°	11-13
Calcium, Carbide	70 - 80	35°	
Carbon Black, Pellets	25	25°	
Carbon Black, Powder	5	35°	
Cast Iron Chips	100 -120	45°	
Cement, Clinker	75 - 90	35°	
Cement, Portland	80 -100	35°	20-23
Chalk, Fine	65 - 75	45°	
Chalk, Lumpy	80 - 95	45°	
Charcoal, Wood	15 - 30	35°	20-25
Chromium Ore	125 - 140	35°	
Cinders, Coal	40	35°	20
Clay, Dry, Fine	100 - 120	35°	20-22
Clay, Dry, Lumpy	60 - 75	35°	18-20
Coal, Anthracite, Coarse	60 - 70	35°	18
Coal, Anthracite, Loose	50 - 60	30°	16
Coal, Bituminous, Coarse	50 - 60	35°	18
Coal, Bituminous, Loose	45 - 50	35°	16
Cocoa Nibs	35 - 40	35°	
Coconut, Shredded	20 - 25	45°	
Coffee, Fresh Beans	30 - 40	35°	10-15
Coffee, Roasted Beans	22 - 30	25°	
Coke, Loose	23 - 32	35°	18
Coke Pulverized	25 - 35	45°	20-22
Coke, Petroleum Calcinated	35 - 45	35°	20
Concrete, Cinder	112	0°	12-30
Concrete, Gravel & Sand	150	0°	
Copper Ore	120 - 150	35°	20
Copper Sulfate	75 - 85	30°	17
Cork, Ground	5 - 15	45°	
Corn, On Cob	45	0°	
Corn, Shelled	45	25°	10
Corn Sugar	30	35°	
Corn Grits	40 - 45	35°	
Cornmeal	32- 40	35°	22
Cottonseed, Dry, De-Linted	35	35°	16
Cottonseed, Dry, Not De-Linted	18- 25	45°	19
Cottonseed, Cake, Lumpy	40- 45	35°	
Cottonseed, Hulls	12	45°	
Cottonseed, Meal	35- 40	35°	22
Cottonseed, Meats	40	35°	
Cryolite	90-110	35°	
Cullet	80-120	35°	20
Diatomaceous Earth	11- 14	35°	
Dolomite, Lumpy	90-100	35°	22
Dolomite, Pulverized	46	40°	
Earth, Dry"	70- 80	35°	20
Earth, Moist	75-110	40°	23
Earth, Fullers Dry	30- 35	23°	20
Emery	225	25°	
Epsom Salt	40- 50	35°	
Feldspar, Lumps	70-100	35°	17
Feldspar, Dust	80-100	40°	
Fish, Meal	35- 40	40°	
Fish, Scrap	40- 50	0°	
Flaxseed, Whole	45	25°	12
Flaxseed, Meal	25	35°	
Flour, Wheat	35- 40	45°	21
Flue Dust, Dry	30- 40	20°	
Fluorspar, Dust	85- 95	45°	
Fluorspar, Lumps	80-110	45°	
Foundry, Refuse	60- 80	35°	
Foundry Sand, Loose	80- 90	35°	
Foundry Sand, Rammed	100-110	0°	
Galena	250	35°	
Garbage, Average	30	25°	
Glass, Batch Fiber	45 - 55	10°	
Glass, Batch Wool	80-100	35°	20-22
Glass, Broken	80-100	10°	
Glue, Animal, Flaked	35	25°	
Glue, Vegetable, Powdered	40	35°	
Gluten, Meal	39	35°	
Granite, Lumps	150 -170	25°	
Graphite, Flakes	40	35°	
Graphite, Powder	30	25°	
Graphite, Ore	65 - 75	35°	
Grass Seed	10	35°	
Gravel, Dry	90-100	35°	15-17
Gravel, Wet	100-120	35°	
Gypsum, Lumps	90-100	35°	15
Gypsum, Ground	75- 80	35°	21
Hay, Loose	5	0°	
Hay, Pressed	25	0°	
Hominy	35- 50	35°	
Hops, Spent, Dry	25- 35	45°	
Hops, Spent, Wet	55- 60	45°	
Ice, Crushed	35- 40	20-	
Ilmenite Ore	140-160	35°	
Iron Ore	120-180	35°	18-20
Iron Ore, Pellets	120-140	35°	13-15
Iron Sulphate	50- 75	35°	
Iron Sulfide	120-140	35°	

DODGE

Table 16: Material Characteristics (Continued)

MATERIAL	DENSITY (LB/fT3)	ANGLE OF REPOSE (DEG)	RECOMMENDED MAXIMUM INCLINATION
Kaolin, Clay	60	35°	19
Lactose	30	35°	
Lead Ore, Crushed	180 - 270	30°	
Lead Oxides	60 - 150	40°	
Lead Sulfate	170 - 190	45°	
Lead Sulfide	240 - 260	35°	
Lignite, Air Dried	45 - 55	35°	
Lime, Ground	60 - 65	40°	23
Lime, Hydrated	40	40°	21
Lime, Pebble	30 - 40	40°	17
Limestone, Loose	80 - 100	35°	20
Limestone, Pulverized	85 - 90	45°	18
Linseed, Whole	45 - 50	25°	
Linseed, Meal	30 - 40	35°	20
Magnesium Chloride	30 - 35	40°	
Magnesium Sulfate	40 - 60	35°	
Malt, Dry	25 - 30	30°	
Malt, Wet	60 - 65	45°	
Malt, Meal	35 - 40	35°	
Manganese Ore	125 - 140	40°	
Manganese Oxide	120	35°	
Manganese Sulfate	70	35°	
Manure	25	0°	
Marble, Crushed	80 - 95	35°	
Marl	80	35°	
Mica, Flakes	20	20°	
Mica, Ground	15	35°	23
Milk, Dried, Flaked	5	35°	
Milk, Malted	25 - 35	45°	
Milk, Powdered	20 - 30	40°	
Milo Maize	55 - 60	35°	
Molybdenum Ore	100 - 110	40°	
Mortar, Wet	150	0°	
Niacin	35	35°	
Nickel-Cobalt Sulfate Ore	80 - 150	35°	
Oats	25 - 35	25°	10
Oats, Rolled	20	35°	
Oil Cake	50	45°	
Oxalic Acid Crystals	60	35°	
Oyster Shells, Ground	50 - 60	35°	
Oyster Shells, Whole	80	35°	
Paper Pulp Stock	40 - 60	20°	
Peanuts, Shelled	35 - 45	35°	
Peanuts, Not Shelled	15 - 20	35°	
Peas, Dried	45 - 50	0°	
Phosphate, Fertilizer	50 - 60	35°	30
Phosphate, Rock, Crushed	60 - 100	35°	25
Potash	70 - 80	30°	
Potassium Chloride	120 - 130	35°	
Potassium Nitrate	75 - 80	25°	
Potassium Sulfate	45	45°	
Potatoes, White”	48	0°	
Pumice, Ground	40 - 45	45°	
Pyrites, Lumps	135 - 145	25°	
Pyrites, Pellets	120 - 130	35°	
Quartz, Lumps	95 - 100	25°	
Quartz, Sand	70 - 80	25°	
Rice, Hulled	45 - 50	20°	8
Rice, Rough	35	35°	
Rice, Grits	40 - 45	35°	
Rock, Crushed	100 - 150	30°	

MATERIAL	DENSITY (LB/fT3)	ANGLE OF REPOSE (DEG)	RECOMMENDED MAXIMUM INCLINATION
Rubber, Pellets	50 - 55	35°	22
Rubber, Ground Scrap	25 - 35	45°	18
Rye	42 - 45	25°	8
Rye Meal	35 - 40	20°	
Salt Cake	80 - 95	30°	21
Salt, Coarse”	45 - 55	35°	18-22
Salt, Fine”	70 - 80	35°	11
Sand, Wet	110 - 130	45°	20-22
Sand, Dry	90 - 110	35°	16-18
Sand, Loose, Foundry	80 - 100	35°	22
Sand, Foundry, Rammed	100 - 110	0°	24
Sandstone	80 - 90	35°	
Sawdust	10 - 25	30°	22
Scale, Rolling Mill	125 - 160	45°	
Sewage Sludge, Dry	45 - 55	35°	
Sewage Sludge, Wet	50 - 60	35°	
Shale, Broken	90 - 100	25°	
Shale, Crushed	85 - 90	40°	22
Silica Gel, Dry	45	35°	
Slag, Blast Furnace	80 - 90	25°	10
Slag, Granular, Dry	60 - 65	25°	13-16
Slag, Granular, Wet	90 - 100	45°	20-22
Slate, Ground	80 - 90	30°	15
Slate, Lumps	85 - 95	0°	
Snow, Compacted	15 - 50	0°	
Soap	10 - 25	35°	
Soda Ash, Briquettes	50	20°	7
Soda Ash, Heavy	55 - 65	30°	19
Soda Ash, Light	20 - 35	35°	22
Sodium Aluminum, Ground	72	35°	
Sodium Nitrate, Ground	70 - 80	24°	11
Sodium Phosphate	50 - 65	35°	
Soybeans, Cracked	30 - 40	35°	15-18
Soybeans, Whole”	45 - 50	25°	12-16
Starch, Powdered	25 - 45	25°	12
Steel, Chips	100 - 150	35°	18
Steel, Turnings	60 - 120	45°	
Sugar, Cane, Raw	55 - 65	45°	
Sugar. Granulated, Dry	50 - 55	35°	
Sugar, Granulated, Wet	55 - 65	40°	
Sugar Cane, Knifed	15 - 18	45°	
Sulphur, Lumps	80 - 85	35°	
Sulphur, Dust	50 - 70	35°	
Saconite, Pellets	120 - 140	35°	13-15
Salc, Granulated	50 - 70	20°	
Titanium Dioxide	140	35°	
Titanium Sponge	60 - 70	45°	
Tobacco, Leaves	14	45°	
Tobacco, Scraps	15 - 25	45°	
Tobacco, Stems	15	45°	
Traprock, Crushed	95 - 110	35°	
Traprock, Lumps	100 - 110	35°	
Turf	20 - 30	0°	
Walnut, Shells	35 - 45	35°	
Wheat	48	25°	12
Wheat, Cracked	40 - 45	35°	
Wheat Germ, Dry	20 - 30	25°	27
Wood Chips	10 - 30	45°	22
Zinc Ore, Granular	160	35°	
Zinc Oxide	10 - 35	45°	

ENGINEERING

Shafting

Table 17: Typical Commercial Shaft Tolerances

Shaft Size	Plus	Minus
Up to 1-1/2”	.000	.002
Over 1-1/2 to 2-1/2”	.000	.003
Over 2-1/2 to 4”	.000	.004
Over 4 to 6”	.000	.005
Over 6 to 8”	.000	.006
Over 8 to 9”	.000	.007
Over 9”	.000	.008

Table 18: Shaft Tolerances

Shaft Size	Tolerance, Inches
Up to 1-1/2”	+.0000 -.0005”
1-5/8 to 4”	+.000 -.001”
4-7/16 to 6”	+.000 -.0015”
6-7/16 to 8”	+.000 -.002”

Table 18 lists the recommended tolerances for all setscrew locking, eccentric locking and D-LOK locking ball and roller bearings

Table 19: Shaft Tolerances

Shaft Size	Tolerance, Inches
Up to 1-1/2”	+.000 -.002”
1-9/16 to 2-1/2”	+.000 -.003”
2-5/8 to 4”	+.000 -.004”
4-3/16 to 6”	+.000 -.005”
6-7/16” and above	+.000 -.006”

Table 19 list the recommended tolerances for all tapered adapter sleeve ball and roller bearings

Standard Shafting-Table 17 indicates standard shafting is cold drawn in the smaller sizes and turned and polished in the larger diameters. It has a smooth surface, is commercially straight and is readily machinable; suitable and recommended for general power transmission and material handling service.

Special Shafting-While standard shafting is suitable for most installations, special shafting is sometimes required for certain chemical, temperature or physical requirements. Such materials as high carbon steel, alloy steel, stainless steel, brass, Monel metal, etc., can be furnished plain or heat treated. Stepped, flanged, hollow or other special forms are available.

Special shafting should be avoided in favor of standard shafting wherever possible because special shafting is usually considerably more expensive and requires a greater length of time to obtain, which is an especially important consideration should quick replacement ever become necessary.

Ordering Shafting-Standard shafting can be obtained from most supply houses and dealers who handle power transmission material.

Turning Down Shaft Ends-When necessary to turn down shaft ends, use as large a fillet as possible to keep the stress concentration to a minimum. The radius of this fillet should preferably be not less than the difference in the two diameters joined by the fillet. The fillet should be finished and polished as smoothly as possible to avoid scratches which might start cracks and lead to failure of the shaft by fatigue.

Selection of Shaft Diameters

Tables 21 - 24 inclusive can be used to find approximate shaft diameter for various service conditions For greater accuracy use chart under heading “Combined Torsion and Bending of Standard Shafts” (B20-17).

Tables and chart are based upon a safe shear stress of 6,000 pounds per square inch for standard keyseated shafting. Be generous in the selection of shaft diameters as liberal diameters not only reduce deflection and vibration but also generally increase bearing life.

When necessary to use other than standard shafting, find the required diameter for standard shafting as outlined above and multiply by proper factor shown in Table 25, under heading “Factors for Shafting Other than Standard Shafting, “(B20-16).

Table 20: No Bending Moment (Shafts without pulleys, sprockets or gears - Torsion only)

Shaft Size	Horse Power at Various Revolutions per Minute																		
	25	50	75	100	125	150	175	200	225	250	275	300	350	400	500	600	700	800	900
15/16	0.30	0.70	1.10	1.50	1.90	2.30	2.60	3.00	3.40	3.80	4.20	4.60	5.30	6.10	7.70	9.20	10.70	12.30	13.80
1-3/16	0.70	1.50	2.30	3.10	3.90	4.60	5.40	6.20	7.00	7.80	8.60	9.30	10.90	12.50	15.60	18.70	21.90	25.00	28.10
1-7/16	1.30	2.70	4.10	5.50	6.90	8.30	9.70	11.10	12.40	13.80	15.20	16.60	19.40	22.20	27.70	33.30	38.80	44.40	49.90
1-11/16	2.20	4.40	6.60	8.90	11.20	13.40	15.70	17.90	20.20	22.40	24.70	26.90	31.40	35.90	44.90	53.80	62.80	71.80	80.80
1-15/16	3.30	6.70	10.10	13.50	16.90	20.30	23.70	27.10	30.50	33.90	37.30	40.70	47.50	54.30	67.90	81.50	95.10	108.00	122.00
2-3/16	4.90	9.80	14.60	19.50	24.40	29.30	34.20	39.10	44.00	48.90	53.80	58.60	68.40	78.20	97.80	117.00	136.00	156.00	176.00
2-7/16	6.70	13.50	20.20	27.00	33.80	40.60	47.30	54.10	60.90	67.60	74.40	81.20	94.70	108.00	135.00	162.00	189.00	216.00	243.00
2-11/16	9.00	18.10	27.10	36.20	45.30	54.40	63.40	72.50	81.60	90.70	99.70	108.00	126.00	145.00	181.00	217.00	253.00	290.00	326.00
2-15/16	11.80	23.60	35.40	47.30	59.20	71.00	82.90	94.70	106.00	118.00	130.00	142.00	165.00	189.00	236.00	284.00	331.00	379.00	426.00
3-7/16	19.00	37.90	57.00	75.90	94.90	113.00	132.00	151.00	170.00	189.00	208.00	227.00	265.00	303.00	379.00	455.00	531.00	607.00	683.00
3-15/16	28.50	57.00	85.50	114.00	142.00	171.00	199.00	228.00	256.00	285.00	313.00	342.00	399.00	456.00	570.00	684.00	798.00	912.00	1026.00
4-7/16	40.80	81.60	122.00	163.00	204.00	245.00	286.00	327.00	367.00	408.00	449.00	490.00	572.00	653.00	816.00	980.00	1143.00	1306.00	1470.00

Table 21: Limited Bending Moment (Pulleys, sprockets or gears near bearings. Ordinary line shafts.)

Shaft Size	Horse Power at Various Revolutions per Minute																		
	25	50	75	100	125	150	175	200	225	250	275	300	350	400	500	600	700	800	900
15/16	0.20	0.50	0.70	1.00	1.20	1.50	1.70	2.00	2.30	2.50	2.80	3.00	3.50	4.10	5.10	6.10	7.10	8.20	9.20
1-3/16	0.50	1.00	1.50	2.00	2.60	3.10	3.60	4.10	4.70	5.20	5.70	6.20	7.30	8.30	10.40	12.50	14.60	16.70	18.80
1-7/16	0.90	1.80	2.70	3.70	4.60	5.50	6.40	7.40	8.30	9.20	10.10	11.10	12.90	14.80	18.50	22.20	25.90	29.60	33.30
1-11/6	1.40	2.90	4.30	5.90	7.40	8.90	10.40	11.90	13.40	14.90	16.40	17.90	20.90	23.90	29.90	35.90	41.90	47.90	53.90
1-15/16	2.20	4.50	6.70	9.00	11.30	13.60	15.80	18.10	20.40	22.60	24.90	27.20	31.70	36.20	45.30	54.40	63.40	72.50	81.60
2-3/16	3.20	6.50	9.70	13.00	16.30	19.50	22.80	26.10	29.30	32.60	35.80	39.10	45.60	52.20	65.20	78.30	91.30	104.00	117.00
2-7/16	4.50	9.00	13.50	18.00	22.50	27.00	31.60	36.10	40.60	45.10	49.60	54.10	63.20	72.20	90.20	108.00	126.00	144.00	162.00
2-11/16	6.00	12.10	18.10	24.20	30.20	36.30	42.30	48.40	54.40	60.50	66.50	72.60	84.70	96.80	121.00	145.00	169.00	193.00	217.00
2-15/16	7.90	15.80	23.70	31.60	39.50	47.40	55.30	63.20	71.10	79.00	86.90	94.80	110.00	126.00	158.00	189.00	221.00	252.00	284.00
3-7/16	12.60	25.30	37.90	50.60	63.30	75.90	88.60	101.00	113.00	126.00	139.00	151.00	177.00	202.00	253.00	303.00	354.00	405.00	455.00
3-15/16	19.00	38.00	57.00	76.10	94.10	114.00	133.00	152.00	171.00	190.00	209.00	228.00	266.00	304.00	380.00	456.00	532.00	608.00	685.00
4-7/16	27.00	54.00	81.00	108.00	136.00	163.00	190.00	217.00	245.00	272.00	299.00	326.00	381.00	435.00	544.00	653.00	762.00	871.00	980.00
4-15/16	37.00	75.00	112.00	150.00	187.00	225.00	262.00	300.00	337.00	375.00	412.00	450.00	525.00	600.00	750.00	900.00	1050.00	1200.00	1350.00
5-7/16	50.00	100.00	150.00	200.00	250.00	300.00	350.00	400.00	451.00	501.00	551.00	601.00	701.00	801.00	1002.00	1202.00	1403.00	1603.00	1804.00
5-15/16	65.00	130.00	195.00	261.00	326.00	391.00	456.00	522.00	587.00	652.00	717.00	783.00	913.00	1044.00	1305.00	1566.00	1827.00	2088.00	2349.00
6-1/2	85.00	171.00	256.00	342.00	427.00	513.00	598.00	684.00	769.00	855.00	940.00	1026.00	1197.00	1368.00	1710.00	2052.00	2394.00	2736.00	3078.00

Selection of Shaft Diameters (Continued)

Table 22: Heavy Bending Moment. (Use for main or important shafts.)

Shaft Size	Horse Power at Various Revolutions per Minute																		
	25	50	75	100	125	150	175	200	225	250	275	300	350	400	500	600	700	800	900
1-11/16	0.80	1.70	2.50	3.50	4.40	5.30	6.20	7.10	8.00	8.90	9.80	10.70	12.50	14.30	17.90	21.50	25.10	28.70	32.30
1-15/16	1.30	2.70	4.00	5.40	6.70	8.10	9.50	10.80	12.20	13.50	14.90	16.30	19.00	21.70	27.10	32.60	38.00	43.50	48.90
2-3/16	1.90	3.90	5.80	7.80	9.70	11.70	13.70	15.60	17.60	19.50	21.50	23.40	27.40	31.30	39.10	46.90	54.80	62.60	70.40
2-7/16	2.70	5.40	8.10	10.80	13.50	16.20	18.90	21.60	24.30	27.00	29.70	32.40	37.90	43.30	54.10	64.90	75.80	86.60	97.40
2-11/16	3.60	7.20	10.80	14.50	18.10	21.70	25.40	29.00	32.60	36.20	39.90	43.50	50.80	58.00	72.50	87.10	101	116	130
2-15/16	4.70	9.40	14.10	18.90	23.60	28.40	33.10	37.90	42.60	47.30	52.10	56.80	66.30	75.80	94.70	113	132	151	170
3-7/16	7.50	15.10	22.60	30.30	37.90	45.50	53.10	60.70	68.30	75.90	83.50	91.10	106	121	151	182	212	243	273
3-15/16	11.40	22.80	34.20	45.60	57.00	68.40	79.90	91.30	102	114	125	136	159	182	228	273	319	365	410
4-7/16	16.30	32.60	48.90	65.30	81.60	98.00	114	130	147	163	179	196	228	261	326	392	457	522	588
4-15/16	22.50	45.00	67.50	90.00	112	135	157	180	202	225	247	270	315	360	450	540	630	720	810
5-7/16	30.00	60.00	90.00	120	150	180	210	240	270	300	330	360	420	480	601	721	841	961	1082
5-15/16	39.00	78.00	117	156	195	234	273	313	352	391	430	469	547	626	782	939	1095	1252	1409
6-1/2	51.00	102	153	205	256	308	359	410	462	513	564	616	718	821	1027	1232	1437	1643	1848
7	64.00	128	192	256	320	384	448	513	577	641	705	769	897	1026	1282	1539	1795	2052	2308
7-1/2	78.50	157	235	315	394	473	552	631	709	788	867	946	1104	1262	1577	1893	2208	2524	2839
8	95.50	191	286	382	478	574	670	765	861	957	1053	1148	1340	1531	1914	2297	2680	3063	3446
8-1/2	114	229	343	459	574	688	803	918	1033	1148	1263	1377	1607	1837	2296	2755	3215	3674	4133
9	136	272	408	545	681	817	954	1090	1226	1363	1499	1635	1908	2181	2726	3271	3816	4362	4907
9-1/2	160	320	480	641	801	961	1122	1282	1442	1603	1763	1923	2244	2565	3206	3847	4488	5130	5771
10	186	373	559	747	934	1121	1308	1495	1682	1869	2056	2243	2617	2991	3739	4487	5235	5983	6731

Table 23: Severe Conditions (Heavy shock loads. Excessively tight belts, long clutch sleeves.)

Shaft Size	Horse Power at Various Revolutions per Minute																		
	25	50	75	100	125	150	175	200	225	250	275	300	350	400	500	600	700	800	900
1-11/16	0.4	0.89	1.20	1.70	2.20	2.60	3.10	3.50	4.00	4.40	4.90	5.30	6.20	7.10	8.90	10.70	12.50	14.30	16.10
1-15/16	0.6	1.39	2.00	2.70	3.30	4.00	4.70	5.40	6.10	6.70	7.40	8.10	9.50	10.80	13.50	16.30	19.00	21.70	24.40
2-3/16	0.90	1.90	2.90	3.90	4.80	5.80	6.80	7.80	8.80	9.70	10.70	11.70	13.70	15.60	19.50	23.40	27.40	31.30	35.20
2-7/16	1.30	2.70	4.00	5.40	6.70	8.10	9.40	10.80	12.10	13.50	14.80	16.20	18.90	21.60	27.00	32.40	37.90	43.30	48.70
2-11/16	1.80	3.60	5.40	7.20	9.00	10.80	12.70	14.50	16.30	18.10	19.90	21.70	25.40	29.00	36.20	43.50	50.50	58.00	65.00
2-15/16	2.30	4.70	7.00	9.40	11.80	14.20	16.50	18.90	21.30	23.60	26.00	28.40	33.10	37.90	47.30	56.50	66.00	75.50	85.00
3-7/16	3.70	7.50	11.30	15.10	18.90	22.70	26.50	30.30	34.10	37.90	41.70	45.50	53.00	60.50	75.50	91.00	106	121	136
3-15/16	5.70	11.40	17.10	22.80	28.50	34.20	39.90	45.60	51.00	57.00	62.50	68.00	79.50	91.00	114	136	159	182	205
4-7/16	8.10	16.30	24.40	32.60	40.80	49.00	57.00	65.00	73.50	81.50	89.50	98.00	114	130	163	196	228	261	294
4-15/16	11.20	22.50	33.70	45.00	56.00	67.50	78.50	90.00	101	112	123	135	157	180	225	270	315	360	405
5-7/16	15.00	30.00	45.00	60.00	75.00	90.00	105	120	135	150	165	180	210	240	300	360	420	480	541
5-15/16	19.50	39.00	58.50	78.00	97.10	117	136	156	171	195	215	234	273	313	391	469	547	626	704
6-1/2	25.50	51.00	76.50	102.5	128	154	179	205	231	256	282	308	359	410	513	616	718	821	924
7	32.00	64.90	96.00	128	160	192	224	256	288	320	352	384	448	513	641	769	897	1026	1154
7-1/2	39.20	78.50	117	157	197	236	276	315	354	394	433	473	552	631	788	946	1104	1262	1419
8	47.70	95.50	143	191	239	287	335	382	430	478	526	574	670	765	957	1148	1340	1531	1723
8-1/2	57.00	114	171	229	287	344	401	459	516	574	631	688	803	918	1148	1377	1607	1837	2066
9	68.00	136	204	272	340	408	477	545	613	681	749	817	954	1090	1363	1635	1908	2181	2453
9-1/2	80.00	160	240	320	400	480	561	641	721	801	881	961	1122	1282	1603	1923	2244	2565	2885
10	93.00	186	279	373	467	560	654	747	841	934	1028	1121	1308	1495	1869	2243	2617	2991	3365

Caution: Be generous in the selection of shaft diameters as liberal diameters not only reduce deflection and vibration but also generally increase bearing life. See notes on next page.

Selection of Shaft Diameters (Continued)

Shaft Stiffness, Shaft Deflection-Standard shafting of adequate strength usually has a sufficiently large diameter to prevent excessive deflection in ordinary installations. It is wise to select shafting of generous diameter, as the greater the diameter, the greater the stiffness. A high tensile strength alloy shaft, although stronger, is no stiffer than a standard shaft of the same diameter.

While it is sometimes possible to use an alloy shaft of less diameter than a standard shaft of equal strength, this practice is usually inadvisable, as the deflection is increased.

Shafts carrying medium or long clutch sleeves should be especially generous.

High Speed Shafts - High speed sometimes causes shaft whipping or vibration. This can be prevented by making the shaft diameter generous and the distance between bearing centers short.

Location of the bearings close to wheels and couplings is advisable whether the shaft is transmitting heavy or light loads.

The use of high tensile strength alloy shafting instead of standard shafting is of no help in preventing vibration as this will not improve the stiffness nor deflection characteristics of the shaft.

Stepped Shafts - For a heavily loaded wheel, a shaft with a boss or enlarged section under the wheel and turned to a smaller diameter at the bearings often provides the most economical installation. The two different diameters should be joined by a very generous fillet, otherwise a dangerous concentration of stress will occur at the fillet. See heading - "Turning Down Shaft Ends." (B16-15).

Shaft Keyseats - Plain keyseats are preferable to round end keyseats in respect to causing the least concentration of stress. However, round end keyseats are often used because of design and assembly requirements. Ends left by the milling cutter should not project into babbitted or bronze bushed bearing, but may project under the sleeve of any DODGE anti-friction bearing.

Shaft diameters obtained from the tables or chart allow for the use of keyseats.

Shaft Bearings - On ordinary line shafting, bearings are commonly spaced about eight feet centers. On large diameter shafts, the spacing may be somewhat greater.

Wheels and clutches should be located near bearings to avoid dangerous bending, deflection and vibration.

Bearings should be mounted on adequate supports so that accurate alignment may be maintained. Shaft misalignment may cause shaft or bearing failure.

Shaft Couplings - Where a rigid coupling is used, it is preferable to have a bearing fairly close. Where a cutoff coupling or a flexible coupling is used, locate bearings close to each end of the coupling.

Expansion of Shafting - Where changes in the length of the shaft due to changes in temperature are to be expected and the bearings are mounted on supporting structures other than steel, consideration must be given to expansion. For more detailed information see B16-20, headed: "Expansion of Shafting."

Factors for Shafting Other Than Standard Shafting

When it is necessary to use other than standard shafting, multiply required diameter for standard shafting as found in the tables or chart by proper factor from Table 24 below.

Standard keyseated shafting, using a safe shear stress of 6,000 PSI is the basis of shafting tables and chart. For safe shear stress of other materials, use 1/10 of nominal ultimate tensile strength. For example, use 8,000 for C1045 and 10,000 for 4140 keyseated shafting. When definite physical specifications are known the least of 13.5% of minimum ultimate tensile strength and 22.5% of minimum elastic limit in tension may be used for keyseated shafting; 18% and 30% respectively if not keyseated.

Caution - As the deflection of steel shafting depends upon the diameter and not upon the analysis of the steel, care should be exercised in the use of alloy shafting not to reduce the diameter unduly. Deflection should not be excessive and bearing capacities should be adequate. It is usually best to use standard shafting instead of a smaller diameter alloy shaft. The smaller alloy shaft may safely transmit the torque but often is undesirable in respect to deflection, vibration and bearing life

Table 24: Shear Stress Factors

Safe Shear Stress	Factor	Safe Shear Stress	Factor	Safe Shear Stress	Factor	Safe Shear Stress	Factor	Safe Shear Stress	Factor
500	2.289	3,000	1.260	5,500	1.029	9,000	.874	14,000	.754
1,000	1.817	3,500	1.197	6,000	1.000	10,000	.843	15,000	.737
1,500	1.587	4,000	1.145	6,500	.974	11,000	.817	16,000	.721
2,000	1.442	4,500	1.101	7,000	.950	12,000	.794	17,000	.707
2,500	1.339	5,000	1.063	8,000	.909	13,000	.773	18,000	.693

Combine Torsion and Bending of Standard Shaft (Based on a Safe Shear Stress of 6,000 PS for Keyseated Shafting)

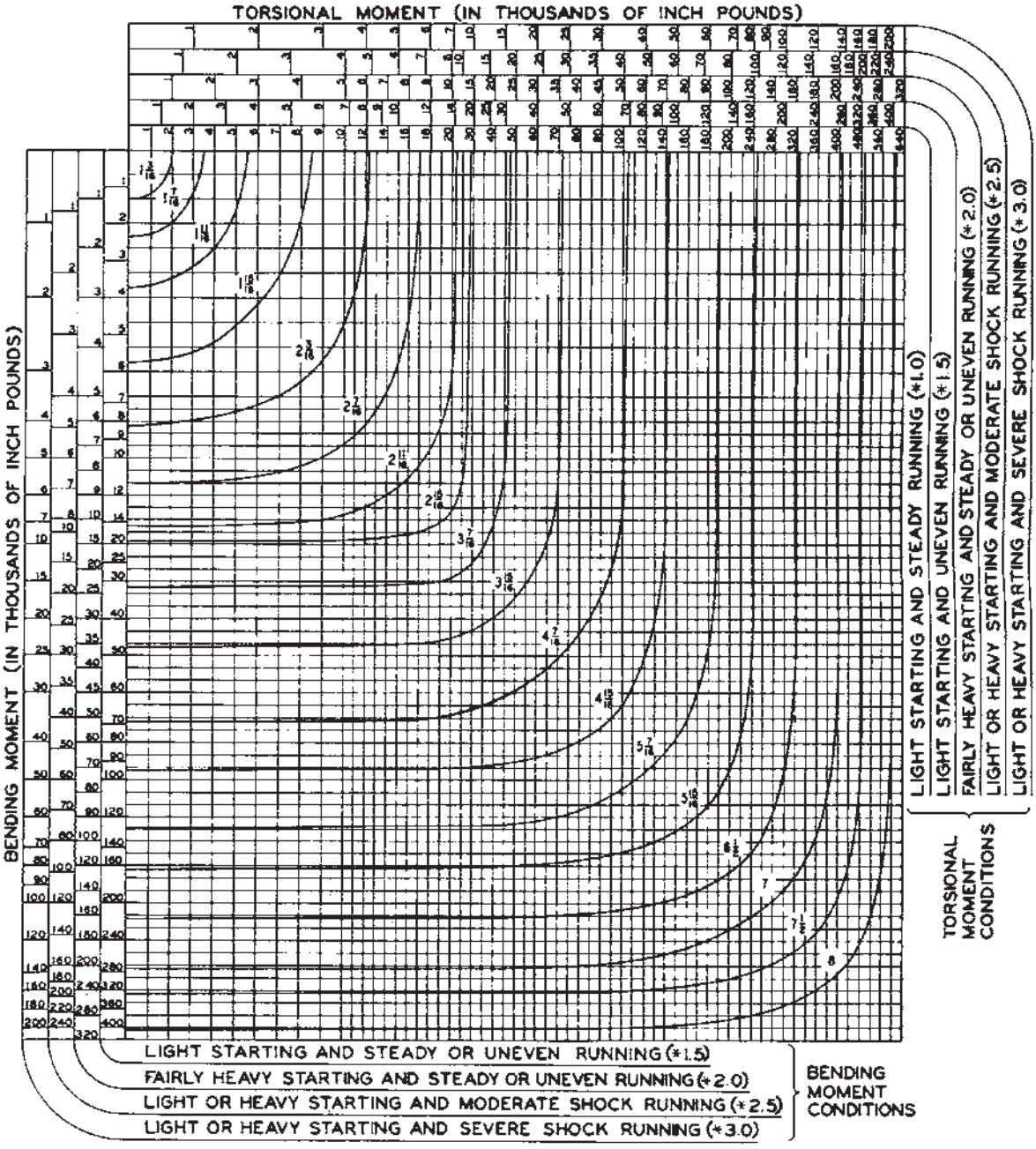

Example: Engine extension shaft driving single cylinder compressor, 15,000 pound-inches torsional moment, 14,000 pound- inches bending moment. Because of the heavy shock running load conditions use scales designated “Light or Heavy Starting and Severe Shock Running”. Project a line down from 15,000 torsional moment. Project a line to the right from 14,000 bending moment. The two lines intersect between 3-7/16 and 3-15/ 16 curves. Use 3-15/16 standard shafting.

Note: The above chart is based on ASME approved standard ASA-B17C-1927 withdrawn in 1954. If the latest shaft selection analysis is required refer to ANSI/ASME B106.1M-1985.

Note: If considering use of other shafting material refer to “Selection of Shaft Diameters” on page B16-18.

Expansion of Shafting

Provision should be made to permit the free movement of shafting endwise due to temperature changes. One bearing should serve as an anchor bearing to locate the shaft endwise. All other bearings should permit the shaft to move freely endwise.

The anchor bearing is often located near an important wheel. On long shafts it should preferably be located near the center of the shaft to keep the expansion of the two ends to a minimum. If the anchor bearing is babbitted it should be fitted with collars. If it is an anti-friction bearing it should be of the non-expansion type, which is the designation of DODGE roller and ball bearings for use as anchor bearings.

All bearings on the shafting other than the anchor bearing should permit the shaft to move freely endwise. If babbitted there should be no thrust collars. If anti-friction these bearings should be of the expansion type.

Several shafts firmly fastened together expand as if one continuous shaft. An example of this is line shafting with flange couplings. If the expansion is considered excessive a long line shaft may be split into two or more sections, the sections being connected with expansion couplings.

Amount of Expansion to be provided for-

The amount of shaft expansion is given in Table 25 below. For example, with a 100°F temperature rise on a 150 ft. line shaft with the anchor bearing located 70 ft. from one end and 80 ft. from the other end the ends will move .529” and .605” respectively away from the anchor bearing. The structure supporting the bearings may also expand depending on heat exposure. Several cases follow:

Case 1- Bearings supported on steel structures, where the shaft and structure are exposed to the same temperatures, will expand at the same rate. Expansion allowance is usually not required. If the shaft is exposed to a higher temperature than the support, allowances should be made. For example, if the shaft temperature is expected to change 80°, and the temperature of the structure 60°, the resulting movement between shafting and support ends will be equivalent to a 20° change.

Case 2 - For bearings supported on wood, brick, or concrete walls, or on piers with foundations in the ground, the amount of expansion is usually considered negligible. Therefore, the full amount of shafting expansion as calculated in Table 25 below, may be accommodated.

Case 3 - Certain structural designs have built-in flexibility. Where this is the case, expansion type bearings are not necessary.

Case 4 - Short shafts with only two bearings are usually designed without compensation for expansion, if temperature variations are not excessive.

Advice on Expansion Problems-

DODGE power transmission engineers will gladly make recommendations concerning shaft expansion problems and the use of suitable bearings.

Table 25: Linear Expansion of Steel Shafting

Base on Expansion In Inches = 0.0000063 x 12 x Length in Feet x Temp. Increase in Degrees Fahrenheit

Length (Feet)	Temperature Increase-Degrees F.					Length (Feet)	Temperature Increase-Degrees F.				
	20°	40°	60°	80°	100°		20°	40°	60°	80°	100°
1	.0015	.0030	.0045	.0060	.0075	40	.060	.121	.181	.242	.302
2	.0030	.0060	.0091	.0121	.0151	45	.068	.136	.204	.272	.340
3	.0045	.0091	.0136	.0181	.0227	50	.076	.151	.227	.302	.378
4	.0060	.0121	.0181	.0242	.0302	55	.083	.166	.249	.333	.416
5	.0076	.0151	.0227	.0302	.0378	60	.091	.181	.272	.363	.454
6	.0091	.0181	.0272	.0363	.0454	65	.098	.197	.295	.393	.491
7	.0106	.0212	.0318	.0423	.0529	70	.106	.212	.317	.423	.529
8	.0121	.0242	.0363	.0484	.0605	75	.113	.227	.340	.454	.567
9	.0136	.0272	.0408	.0544	.0680	80	.121	.242	.363	.484	.605
10	.0151	.0302	.0454	.0605	.0756	85	.129	.257	.386	.514	.643
12	.0181	.0363	.0544	.0726	.0907	90	.136	.272	.408	.544	.680
14	.0212	.0423	.0635	.0847	.1058	95	.144	.287	.431	.575	.718
16	.024	.048	.073	.097	.121	100	.151	.302	.454	.605	.756
18	.027	.054	.082	.109	.136	110	.166	.333	.499	.665	.832
20	.030	.060	.091	.121	.151	120	.181	.363	.544	.726	.907
25	.038	.076	.113	.151	.189	130	.197	.393	.590	.786	.983
30	.045	.091	.136	.181	.227	140	.212	.423	.635	.847	1.058
35	.053	.106	.158	.212	.265	150	.227	.454	.680	.907	1.134

Weights and Properties of Steel Shafting

Table 26: Weight of Round Steel Shafting

Shaft Size	Weight of Shafting for Various Lengths in feet																	Weight Per Inc.
	1	2	3	4	5	6	7	8	9	10	12	14	16	18	20	22	24	
3/4	1.50	3.00	4.50	6.00	7.50	9.00	10.50	12.00	13.50	15.00	18.00	21.00	24.00	27.00	30.00	33.00	36.00	.125
7/8	2.00	4.00	6.10	8.10	10.20	12.20	14.30	16.30	18.40	20.00	25.00	29.00	33.00	37.00	41.00	45.00	49.00	.170
*15/16	2.30	4.70	7.00	9.40	11.70	14.10	16.50	18.80	21.20	23.00	28.00	33.00	38.00	42.00	47.00	52.00	56.00	.195
1	2.70	5.30	8.00	10.60	13.30	16.00	18.60	21.30	24.00	27.00	32.00	37.00	43.00	48.00	53.00	59.00	64.00	.223
1-1/8	3.40	6.80	10.00	13.40	16.70	20.10	23.40	26.70	30.10	34.00	41.00	47.00	54.00	61.00	68.00	74.00	81.00	.281
*1-3/16	3.80	7.60	11.30	15.10	18.90	22.60	26.40	30.10	34.00	38.00	45.00	53.00	60.00	68.00	75.00	83.00	90.00	.314
1-1/4	4.20	8.30	12.50	16.70	20.80	25.00	29.20	33.30	37.50	42.00	50.00	58.00	67.00	75.00	83.00	92.00	100	.348
1-3/8	5.00	10.10	15.30	20.20	25.30	30.30	35.40	40.40	45.40	50.00	60.00	71.00	81.00	91.00	101	111	121	.420
*1-7/16	5.50	11.00	17.00	22.00	28.00	33.00	39.00	44.00	50.00	55.00	66.00	77.00	88.00	99.00	110	121	133	.460
1-1/2	6.00	12.00	18.00	24.00	30.00	36.00	42.00	48.00	54.00	60.00	72.00	84.00	96.00	108	120	132	144	.500
*1-11/16	7.60	15.00	23.00	30.00	38.00	46.00	53.00	61.00	68.00	76.00	91.00	107	122	137	152	167	183	.634
*1-15/16	10.00	20.00	30.00	40.00	50.00	60.00	70.00	80.00	90.00	100	120	140	161	181	201	221	241	.835
2	10.70	21.00	32.00	43.00	53.00	64.00	75.00	85.00	96.00	107	128	150	171	192	214	235	256	.890
*2-3/16	12.80	26.00	38.00	51.00	64.00	77.00	90.00	102	115	128	153	179	205	230	256	281	307	1.06
*2-7/16	15.90	32.00	48.00	63.00	79.00	95.00	111	127	143	159	190	222	254	286	317	349	381	1.32
2-1/2	16.70	34.00	50.00	67.00	83.00	100	117	134	150	167	200	234	267	301	334	367	401	1.39
*2-11/16	19.30	39.00	58.00	77.00	97.00	116	135	154	174	193	232	270	309	348	386	425	463	1.61
*2-15/16	23.00	46.00	69.00	92.00	115	138	161	184	208	231	277	323	369	415	461	507	553	1.92
*3-7/16	31.60	63.00	95.00	126	158	189	221	253	284	316	379	442	505	568	631	695	758	2.63
*3-15/16	41.40	83.00	124	166	207	248	290	331	373	414	497	580	662	745	828	911	994	3.45
*4-7/16	52.60	105	158	210	263	315	368	421	473	526	631	736	841	946	1052	1157	1262	4.38
*4-15/6	65.10	130	195	260	326	391	456	521	586	651	781	911	1041	1172	1302	1432	1562	5.42
*5-7/16	79.00	158	237	316	395	474	553	632	711	790	947	1105	1263	1421	1579	1737	1894	6.58
*6	96.00	192	288	384	481	577	673	769	865	961	1154	1346	1538	1730	1923	2115	2307	8.01

* **Recommended Diameters** These shaft diameters are recommended for use whenever possible as various transmission items such as couplings, collars, clutches, pulleys, etc., are carried in stock in these sizes, at least up to 3-15/16", in the principal cities throughout the United States.

Table 27: Weight and Properties of Round Steel Shafting

Shaft Size	Weight per Inch	Section Modulus		Moment of Inertia		Shaft Size	Weight per Inch	Section Modulus		Moment of Inertia	
		Bending	Torsion	Bending	Torsion			Bending	Torsion	Bending	Torsion
1/16	.00087	.000024	.000048	.000001	.000002	2-7/16	1.32	1.422	2.844	1.733	3.466
1/8	.0035	.000192	.000383	.000012	.000024	2-1/2	1.39	1.534	3.068	1.918	3.835
3/16	.0078	.000647	.001294	.000061	.000121	2-9/16	1.46	1.652	3.304	2.117	4.233
1/4	.0139	.001534	.003068	.000192	.000383	2-5/8	1.53	1.776	3.552	2.331	4.661
5/16	.0217	.002996	.005992	.000468	.000936	2-11/16	1.61	1.906	3.811	2.561	5.122
3/8	.0313	.005177	.010354	.000971	.001941	2-3/4	1.68	2.042	4.084	2.807	5.615
7/16	.0425	.008221	.016442	.001798	.003597	2-13/16	1.76	2.184	4.368	3.071	6.143
1/2	.0556	.0123	.0245	.0031	.0061	2-7/8	1.84	2.333	4.666	3.354	6.707
9/16	.0703	.0175	.0349	.0049	.0098	2-15/16	1.92	2.489	4.977	3.655	7.310
5/8	.0868	.0240	.0479	.0075	.0150	3	2.00	2.651	5.301	3.976	7.952
11/16	.1051	.0319	.0638	.0110	.0219	3-1/16	2.08	2.820	5.640	4.318	8.636
3/4	.125	.0414	.0828	.0155	.0311	3-1/8	2.17	2.996	5.992	4.681	9.363
13/16	.1467	.0527	.1053	.0214	.0428	3-3/16	2.26	3.179	6.359	5.067	10.13
7/8	.1701	.0658	.1315	.0288	.0575	3-1/4	2.35	3.370	6.740	5.477	10.95
15/16	.1954	.0809	.1618	.0379	.0758	3-5/16	2.44	3.568	7.137	5.910	11.82
1	.22	.0982	.1963	.0491	.0982	3-3/8	2.53	3.774	7.548	6.369	12.74
1-1/16	.25	.1178	.2355	.0626	.1251	3-7/16	2.63	3.988	7.976	6.854	13.71
1-1/8	.28	.1398	.2796	.0786	.1573	3-1/2	2.72	4.209	8.419	7.366	14.73
1-3/16	.31	.1644	.3288	.0976	.1952	3-9/16	2.82	4.439	8.878	7.907	15.81
1-1/4	.35	.1917	.3835	.1198	.2397	3-5/8	2.92	4.677	9.353	8.476	16.95
1-5/16	.38	.2220	.4439	.1457	.2913	3-11/16	3.02	4.923	9.845	9.076	18.15
1-3/8	.42	.2552	.5104	.1755	.3509	3-3/4	3.13	5.177	10.35	9.707	19.41
1-7/16	.46	.2916	.5832	.2096	.4192	3-13/16	3.23	5.440	10.88	10.37	20.74
1-1/2	.50	.3313	.6627	.2485	.4970	3-7/8	3.34	5.712	11.42	11.07	22.14
1-9/16	.54	.3745	.7490	.2926	.5852	3-15/16	3.45	5.993	11.99	11.80	23.60
1-5/8	.59	.4213	.8425	.3423	.6846	4	3.56	6.283	12.57	12.57	25.13
1-11/16	.63	.4718	.9435	.3981	.7961	4-1/16	3.67	6.582	13.16	13.37	26.74
1-3/4	.68	.5262	1.052	.4604	.9208	4-1/8	3.78	6.891	13.78	14.21	28.42
1-13/16	.73	.5846	1.169	.5298	1.060	4-3/16	3.90	7.209	14.42	15.09	30.19
1-7/8	.78	.6471	1.294	.6067	1.213	4-1/4	4.01	7.536	15.07	16.01	32.03
1-15/16	.83	.7140	1.428	.6917	1.384	4-5/16	4.13	7.874	15.75	16.98	33.96
2	.89	.7854	1.571	.7854	1.571	4-3/8	4.25	8.221	16.44	17.98	35.97
2-1/16	.94	.8614	1.723	.8883	1.777	4-7/16	4.38	8.579	17.16	19.03	38.07
2-1/8	1.00	.9421	1.884	1.001	2.002	4-1/2	4.50	8.946	17.89	20.13	40.26
2-3/16	1.06	1.028	2.055	1.124	2.248	4-9/16	4.63	9.324	18.65	21.27	42.54
2-1/4	1.13	1.118	2.237	1.258	2.516	4-5/8	4.75	9.713	19.43	22.46	44.92
2-5/16	1.19	1.214	2.428	1.404	2.808	4-11/16	4.88	10.11	20.22	23.70	47.40
2-3/8	1.25	1.315	2.630	1.562	3.124	4-3/4	5.01	10.52	21.04	24.99	49.98

Weights and Properties of Steel Shafting (Continued)

Table 28: Weight and Properties of Round Steel Shafting

Shaft Size	Weight per Inch	Section Modulus		Moment of Inertia		Shaft Size	Weight per Inch	Section Modulus		Moment of Inertia	
		Bending	Torsion	Bending	Torsion			Bending	Torsion	Bending	Torsion
4-13/16	5.15	10.94	21.88	26.33	52.66	13-1/2	40.50	241.50	483.10	1630	3261
4-7/8	5.28	11.37	22.75	27.72	55.45	13-3/4	42.00	255.20	510.40	1755	3509
4-15/16	5.42	11.82	23.63	29.17	58.35	14	43.60	269.40	538.80	1886	3771
5	5.56	12.27	24.54	30.68	61.36	14-1/4	45.10	284.10	568.20	2024	4048
5-1/16	5.70	12.74	25.48	32.24	64.49	14-1/2	46.70	299.30	598.60	2170	4340
5-1/8	5.84	13.22	26.43	33.86	67.73	14-3/4	48.40	315.00	630.10	2324	4647
5-3/16	5.98	13.70	27.41	35.55	71.09	15	50.00	331.30	662.70	2485	4970
5-1/4	6.13	14.21	28.41	37.29	74.58	15-1/4	51.70	348.20	696.40	2655	5310
5-5/16	6.27	14.72	29.44	39.10	78.20	15-1/2	53.40	365.60	731.20	2833	5667
5-3/8	6.42	15.25	30.49	40.97	81.94	15-3/4	55.10	383.60	767.10	3021	6041
5-7/16	6.58	15.78	31.57	42.91	85.82	16	56.90	402.10	804.20	3217	6434
5-1/2	6.72	16.33	32.67	44.92	89.84	16-1/4	58.70	421.30	842.50	3422	6846
5-9/16	6.88	16.90	33.79	46.99	93.99	16-1/2	60.50	441.00	882.00	3638	7277
5-5/8	7.03	17.47	34.95	49.14	98.29	16-3/4	62.40	461.40	922.70	3864	7728
5-11/16	7.19	18.06	36.12	51.36	102.70	17	64.20	482.30	964.70	4100	8200
5-3/4	7.35	18.66	37.33	53.66	107.30	17-1/4	66.10	503.90	1008	4346	8693
5-13/16	7.51	19.28	38.56	56.03	112.10	17-1/2	68.10	526.20	1052	4604	9208
5-7/8	7.67	19.91	39.82	58.48	117.00	17-3/4	70.00	549.10	1098	4873	9745
5-15/16	7.84	20.55	41.10	61.01	122.00	18	72.00	572.60	1145	5153	10306
6	8.00	21.21	42.41	63.62	127.20	18-1/4	74.00	596.70	1193	5445	10891
6-1/16	8.17	21.88	43.75	66.31	132.60	18-1/2	76.10	621.60	1243	5750	11500
6-1/8	8.34	22.56	45.12	69.09	138.20	18-3/4	78.10	647.10	1294	6067	12134
6-3/16	8.51	23.26	46.51	71.95	143.90	19	80.20	673.40	1347	6397	12794
6-1/4	8.68	23.97	47.94	74.90	149.80	19-1/4	82.40	700.30	1401	6741	13481
6-5/16	8.86	24.69	49.39	77.94	155.90	19-1/2	84.50	728.00	1456	7098	14195
6-3/8	9.03	25.44	50.87	81.08	162.20	19-3/4	86.70	756.30	1513	7469	14937
6-7/16	9.21	26.19	52.38	84.30	168.60	20	88.90	785.40	1571	7854	15708
6-1/2	9.39	26.96	53.92	87.62	175.20	20-1/4	91.10	815.20	1630	8254	16508
6-5/8	9.76	28.55	57.09	94.56	189.10	20-1/2	93.40	845.80	1692	8669	17339
6-3/4	10.10	30.19	60.39	101.90	203.80	20-3/4	95.70	877.10	1754	9100	18200
6-7/8	10.50	31.90	63.80	109.70	219.30	21	98.00	909.20	1818	9547	19093
7	10.90	33:67	67.35	117.90	235.70	21-1/4	100.40	942.10	1884	10009	20019
7-1/8	11.30	35.51	71.02	126.50	253.00	21-1/2	102.70	975.70	1951	10489	20978
7-1/4	11.70	37.41	74.82	135.60	271.20	21-3/4	105.10	1010	2020	10985	21970
7-3/8	12.10	39.38	78.76	145.20	290.40	22	107.60	1045	2091	11499	22998
7-1/2	12.50	41.42	82.84	155.30	310.60	22-1/4	110.00	1081	2163	12031	24061
7-5/8	12.90	43.52	87.05	165.90	331.90	22-1/2	112.50	1118	2237	12581	25161
7-3/4	13.30	45.70	91.40	177.10	354.20	22-3/4	115.00	1156	2312	13149	26298
7-7/8	13.80	47.95	95.89	188.80	377.60	23	117.60	1194	2389	13737	27473
8	14.30	50.27	100.50	201.10	402.10	23-1/4	120.10	1234	2468	14344	28687
8-1/8	14.70	52.66	105.30	213.90	427.90	23-1/2	122.70	1274	2548	14971	29941
8-1/4	15.10	55.13	110.30	227.40	454.80	23-3/4	125.40	1315	2630	15618	31236
8-3/8	15.60	57.67	115.30	241.50	483.00	24	128.00	1357	2714	16286	32572
8-1/2	16.10	60.29	120.60	256.20	512.50	24-1/4	130.70	1400	2800	16975	33951
8-5/8	16.50	62.99	126.00	271.60	543.30	24-1/2	133.40	1444	2888	17686	35372
8-3/4	17.00	65.77	131.60	287.70	575.50	24-1/4	136.20	1488	2977	18419	36838
8-7/8	17.50	68.63	137.30	304.50	609.10	25	138.90	1534	3068	19175	38350
9	18.00	71.57	143.10	322.10	644.10	25-1/4	141.70	1580	3161	19954	39907
9-1/8	18.50	74.59	149.20	340.30	680.70	25-1/2	144.50	1628	3256	20755	41511
9-1/4	19.00	77.70	155.40	359.40	718.70	25-3/4	147.40	1676	3352	21581	43163
9-3/8	19.50	80.89	161.80	379.20	758.40	26	150.30	1726	3451	22432	44864
9-1/2	20.10	84.17	168.30	399.80	799.60	26-1/4	153.20	1776	3552	23307	46614
9-5/8	20.60	87.54	175.10	421.30	842.60	26-1/2	156.10	1827	3654	24208	48415
9-3/4	21.10	90.99	182.00	443.60	887.20	26-3/4	159.00	1879	3758	25134	50268
9-7/8	21.70	94.54	189.10	466.80	933.60	27	162.00	1932	3865	26087	52174
10	22.20	98.17	196.30	490.90	981.70	27-1/2	168.10	2042	4083	28074	56148
10-1/4	23.40	105.72	211.40	541.80	1084	28	174.30	2155	4310	30172	60344
10-1/2	24.50	113.65	227.30	596.70	1193	28-1/2	180.50	2273	4545	32385	64771
10-3/4	25.70	121.96	243.90	655.50	1311	29	186.90	2394	4789	34719	69437
11	26.90	130.67	261.30	718.70	1437	29-1/2	193.40	2520	5041	37176	74351
11-1/4	28.10	139.78	279.60	786.30	1573	30	200.00	2651	5301	39761	79522
11-1/2	29.40	149.31	298.60	858.50	1717	30-1/2	206.80	2785	5571	42479	84957
11-3/4	30.70	159.26	318.50	935.70	1871	31	213.60	2925	5849	45333	90666
12	32.00	169.65	339.30	1018	2036	31-1/2	220.50	3069	6137	48329	96659
12-1/4	33.40	180.47	360.90	1105	2211	32	227.60	3217	6434	51472	102944
12-1/2	34.70	191.75	383.50	1198	2397	32-1/2	234.80	3370	6740	54765	109530
12-3/4	36.10	203.48	407.00	1297	2594	33	242.10	3528	7056	58214	116428
13	37.60	215.69	431.40	1402	2804	34	256.90	3859	7717	65597	131194
13-1/4	39.00	228.37	456.70	1513	3026	35	272.30	4209	8418	73662	147324

Viscosity Classification Equivalents

OIL VISCOSITY EQUIVALENCY CHART

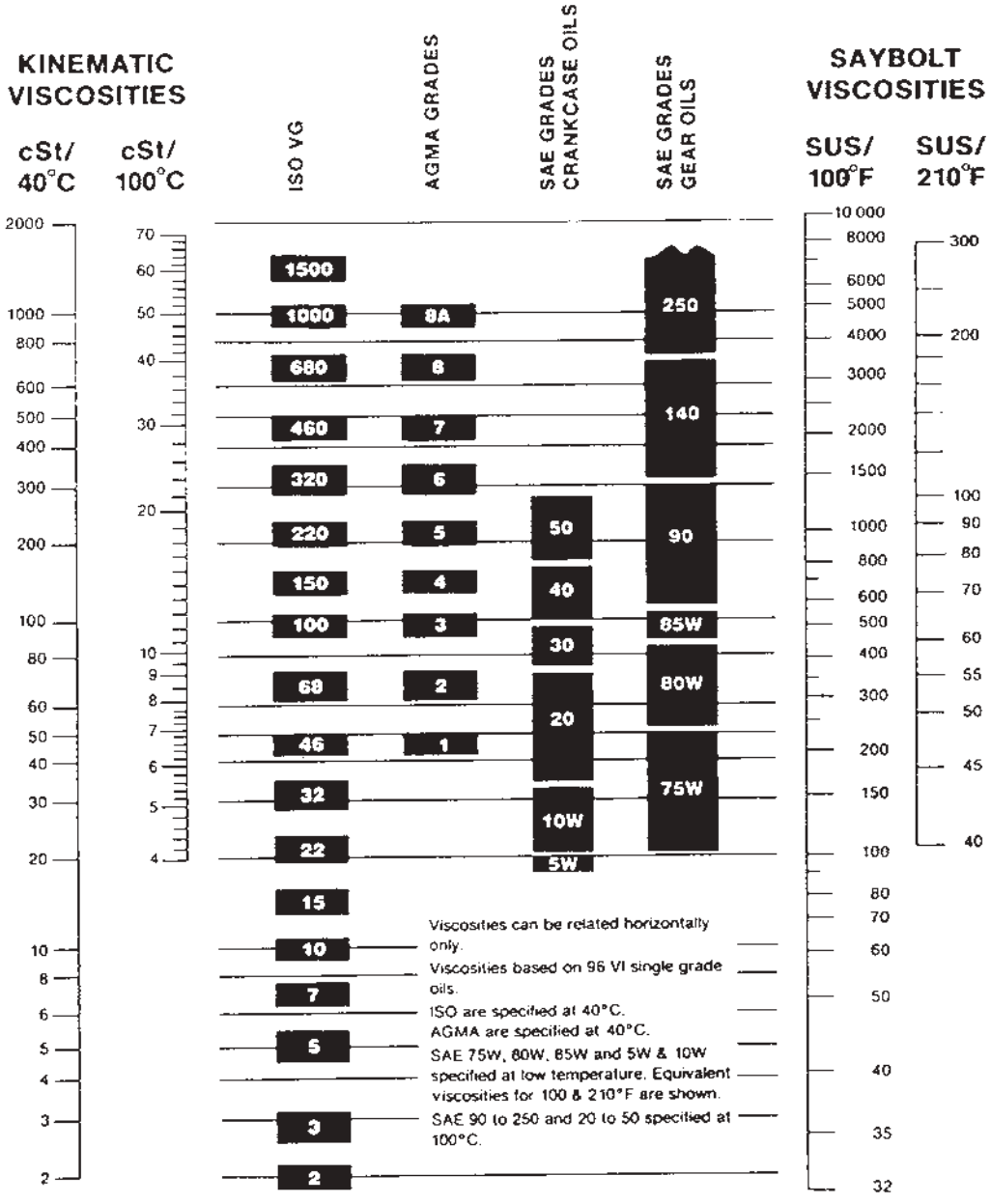

ISO VISCOSITY CLASSIFICATION SYSTEM

All industrial oils are graded according to the ISO Viscosity Classification System, approved by the International Standards Organizations (ISO). Each ISO viscosity grade number corresponds to the mid-point of viscosity range expressed in centistokes (cSt) at 40°C. For example, a lubricant with an ISO grade of 32 has a viscosity within the range of 28.80-35.2, the midpoint of which is 32.

Rule-of-Thumb: The comparable ISO grade of a competitive product whose viscosity in SUS at 100°F is known can be determined by using the following conversion formula:

SUS @ 100° F ÷ 5 = cSt @ 40°C

English Standard Measures

Long Measure

1 mile = 1760 yards = 5280 feet.
1 yard = 3 feet = 36 inches.
1 foot = 12 inches.

Surveyor's Measure

1 mile = 8 furlongs = 80 chains.
1 furlong = 10 chains = 220 yards.
1 chain = 4 rods = 22 yards = 66 feet = 100 links.
1 link = 7.92 inches.

Square Measure

1 square mile = 640 acres = 6400 square chains.
1 acre = 10 square chains = 4840 square yards = 43,560 square feet.
1 square chain = 16 square rods = 484 square yards = 4356 square feet.
1 square rod = 30.25 square yards = 272.25 square feet = 625 square links.
1 square yard = 9 square feet.
1 square foot = 144 square inches.
An acre is equal to a square, the side of which is 208.7 feet.

Dry Measure

1 bushel (U.S. or Winchester struck bushel) = 1.2445 cubic foot = 2150.42 cubic inches.
1 bushel = 4 pecks = 32 quarts = 64 pints.
1 peck = 8 quarts = 16 pints.
1 quart = 2 pints.
1 heaped bushel = 1 1/4 struck bushel.
1 cubic foot = 0.8036 struck bushel.
1 British Imperial bushel=8 Imperial gallons=1.2837 cubic foot = 2218.19 cubic inches.

Liquid Measure

1 U.S. gallon = 0.1337 cubic foot = 231 cubic inches = 4 quarts = 8 pints.
1 quart = 2 pints = 8 gills.
1 pint = 4 gills.
1 British Imperial gallon = 1.2003 U.S. gallon = 277.27 cubic inches.
1 cubic foot = 7.48 U.S. gallons.

Circular and Angular Measure

60 seconds (")	=1 minute (')
60 minutes	=1 degree (-)
360 degrees	=1 circumference (C)
57.3 degrees	=1 radian
2 π radians	=1 circumference (C)

Specific Gravity

The specific gravity of a substance is its weight as compared with the weight of an equal bulk of pure water.

For making specific gravity determinations the temperature of the water is usually taken at 62° F. when 1 cubic foot of water weighs 62.355 lbs. Water is at its greatest density at 39.20° F. or 4° Centigrade.

Temperature

The following equation will be found convenient for transforming temperature from one system to another:

Let F = degrees Fahrenheit; C = degrees Centigrade; R = degrees Reamur.

$$\frac{F-32}{180} = \frac{C}{100} = \frac{R}{80}$$

Avoirdupois or Commercial Weight

1 gross or long ton = 2240 pounds.
1 net or short ton = 2000 pounds.
1 pound = 16 ounces = 7000 grains.
1 ounce = 16 drams = 437.5 grains.

Measures of Pressure

1 pound per square inch = 144 pounds per square foot = 0.068 atmosphere = 2.042 inches of mercury at 62 degrees F. = 27.7 inches of water at 62 degrees F. = 2.31 feet of water at 62 degrees F.

1 atmosphere = 30 inches of mercury at 62 degrees F. = 14.7 pounds per square inch = 2116.3 pounds per square foot = 33.95 feet of water at 62 degrees F.

1 foot of water at 62 degrees F. = 62.355 pounds per square foot = 0.433 pound per square inch.

1 inch of mercury at 62 degrees F. = 1.132 foot of water = 13.58 inches of water = 0.491 pound per square inch.

Column of water 12 in. high, 1 in. dia. = .341 lbs.

Cubic Measure

1 cubic yard = 27 cubic feet.
1 cubic foot = 1728 cubic inches.
The following measures are also used for wood and masonry:
1 cord of wood = 4 X 4 X 8 feet = 128 cubic feet.
1 perch of masonry = 16-1/2 X 1-1/2 X 1 foot = 24-3/4 cubic feet.

Shipping Measure

For measuring entire internal capacity of a vessel: 1 register ton = 100 cubic feet.
For measurement of cargo:
1 U.S. shipping ton = 40 cubic feet = 32.143 U.S. bushels = 31.16 Imperial bushels.
British shipping ton = 42 cubic feet = 33.75 U.S. bushels = 32.72 Imperial bushels.

Troy Weight, Used for Weighing Gold and Silver

1 pound = 12 ounces = 5760 grains.
1 ounce = 20 pennyweights = 480 grains.
1 pennyweight = 24 grains.
1 carat (used in weighing diamonds) = 3.086 grains.
1 grain Troy = 1 grain avoirdupois = 1 grain apothecaries' weight.

Measure Used for Diameters and Areas of Electric Wires

1 circular inch = area of circle 1 inch in diameter = 0.7854 square inch.
1 circular inch = 1,000,000 circular mils.
1 square inch = 1.2732 circular inch = 1,273,239 circular mils.
A circular mil is the area of a circle 0.001 inch in diameter.

Board Measure

One foot board measure is a piece of wood 12 inches square by 1 inch thick, or 144 cubic inches. 1 cubic foot therefore equals 12 feet board measure

ENGINEERING

TABLE 29: Decimal and Millimeter Equivalents of Fractions

Inches Fractions		Inches Decimals	Milli-meters	Inches Fractions		Inches Decimals	Milli-meters	Inches Fractions		Inches Decimals	Milli-meters
1/64		.015625	.397		11/32	.34375	8.7319		11/16	.6875	17.463
	1/32	.03125	.794	23/64		.359375	9.128	45/64		.703125	17.859
3/64		.046875	1.191		3/8	.375	9.525		23/32	.71875	18.256
	1/16	.0625	1.588	25/64		.390625	9.922	47/64		.734375	18.653
5/64		.078125	1.984		13/32	.40625	10.319		3/4	.750	19.050
	3/32	.09375	2.381	27/64		4.21875	10.716	49/64		.765625	19.447
7/64		.109375	2.778		7/16	4.375	11.113		25/32	.78125	19.844
	1/8	.125	3.175	29/64		4.53125	11.509	51/64		.796875	20.241
9/64		.140625	3.582		15/32	.46875	11.906		13/16	.8125	20.638
	5/32	.15625	3.969	31/64		.48376	12.303	53/64		.828125	21.034
11/64		.171875	4.366		1/2	.500	12.700		27/32	.84375	21.431
	3/16	.1875	4.763	33/64		.515625	13.097	55/64		.859375	21.828
13/64		.203125	5.159		17/32	.53125	13.494		7/8	.875	22.225
	7/32	.21875	5.556	35/64		.546875	13.891	57/64		.890625	22.622
15/64		.234375	5.953		9/16	.5625	14.288		29/32	.90524	23.019
	1/41	.250	6.350	37/64		.578125	14.684	59/64		.921875	23.416
7/64		.265625	6.747		19/32	.59375	14.081		15/16	.9375	23.813
	9/32	.28125	7.144	39/64		.609375	15.478	61/64		.953125	24.209
19/64		.296875	7.541		5/8	.625	15.875		31/32	.96875	24.606
	5/16	.3125	7.938	41/64		.60625	16.272	63/64		.984375	25.003
21/64		.328125	8.334		21/32	.65625	16.669		1	1.000	25.400
				43/64		.671875	17.066				

Table 30: Millimeter-Inch Equivalents: 1” = 25.4mm (.03937” = 1mm)

Millimeter	Decimal	Millimeter	Decimal	Millimeter	Decimal	Millimeter	Decimal	Millimeter	Decimal
1	.03937	52	2.04724	103	4.05511	154	6.06299	205	8.07086
2	.07874	53	2.08661	104	4.09448	155	6.10236	206	8.11023
3	.11811	54	2.12598	105	4.13385	156	6.14173	207	8.14960
4	.15748	55	2.16535	106	4.17322	157	6.18110	208	8.18897
5	.19685	56	2.20472	107	4.21259	158	6.22047	209	8.22834
6	.23622	57	2.24409	108	4.25196	159	6.25984	210	8.26771
7	.27559	58	2.28346	109	4.29133	160	6.29921	211	8.30708
8	.31496	59	2.32283	110	4.33070	161	6.33858	212	8.34645
9	.35433	60	2.36220	111	4.37007	162	6.37795	213	8.38582
10	.39370	61	2.40157	112	4.40944	163	6.41732	214	8.42519
11	.43307	62	2.44094	113	4.44881	164	6.45669	215	8.46456
12	.47244	63	2.48031	114	4.48818	165	6.49606	216	8.50393
13	.51181	64	2.51968	115	4.52755	166	6.53543	217	8.54330
14	.55118	65	2.55905	116	4.56692	167	6.57480	218	8.58267
15	.59055	66	2.59842	117	4.60629	168	6.61417	219	8.62204
16	.62992	67	2.63779	118	4.64566	169	6.65354	220	8.66141
17	.66929	68	2.67716	119	4.68503	170	6.69291	221	8.70078
18	.70866	69	2.71653	120	4.72440	171	6.73228	222	8.74015
19	.74803	70	2.75590	121	4.76378	172	6.77165	223	8.77952
20	.78740	71	2.79527	122	4.80315	173	6.81102	224	8.81889
21	.82677	72	2.83464	123	4.84252	174	.685039	225	8.85826
22	.86614	73	2.87401	124	4.88189	175	6.88976	226	8.897.63
23	.90551	74	2.91338	125	4.92126	176	6.92913	227	8.93700
24	.94488	75	2.95275	126	4.96063	177	.696850	228	8.97637
25	.98425	76	2.99212	127	5.00000	178	7.00787	229	9.01574
26	1.02362	77	3.03149	128	5.03937	179	7.04724	230	9.05511
27	1.06299	78	3.07086	129	5.07875	180	7.08661	231	9.09448
28	1.10236	79	3.11023	130	5.11811	181	7.12598	232	9.13385
29	1.14173	80	3.14960	131	5.15749	182	7.16535	233	9.17322
30	1.18110	81	3.18897	132	5.19685	183	7.20472	234	9.21259
31	1.22047	82	3.22834	133	5.23622	184	7.24409	235	9.25196
32	1.25984	83	3.26771	134	5.27559	185	7.28346	236	9.29133
33	1.29921	84	.303708	135	5.31496	186	7.32283	237	9.33070
34	1.33858	85	3.34645	136	5.35433	187	7.36220	238	9.37007
35	1.37795	86	3.38582	137	5.39370	188	7.40157	239	9.40944
36	1.41732	87	.342519	138	.543307	189	7.44094	240	9.44881
37	1.45669	88	3.46456	139	.547244	190	7.48031	241	9.48818
38	1.49606	89	3.50393	140	5.51181	191	7.51968	242	9.52755
39	1.53543	90	3.54330	141	5.55118	192	7.55905	243	9.56692
40	1.57480	91	.358267	142	5.59055	193	7.59842	244	9.60629
41	1.61417	92	3.62204	143	5.62992	194	7.63779	245	9.64566
42	1.65354	93	3.66141	144	5.66929	195	7.67716	246	9.68503
43	1.69291	94	3.70078	145	5.70866	196	7.71653	247	9.72440
44	1.73228	95	3.74015	146	5.748.4	197	7.75590	248	9.76378
45	1.77165	96	3.77952	147	5.78740	198	7.79527	249	9.80315
46	1.81102	97	3.81899	148	5.82677	199	7.83464	250	9.84252
47	1.85039	98	3.85826	149	5.86614	200	7.87401	251	9.88189
48	1.88976	99	3.89763	150	5.90551	201	7.91338	252	9.92126
49	1.92913	100	3.93710	151	5.94488	202	795275	253	9.96063
50	1.96850	101	3.97637	152	5.98425	203	799221	254	10.00000
51	2.00787	102	4.01574	153	6.02362	204	8.03149	-	-

Metric System of Measurements

Measures of Length

10	millimeters (mm.)	=	1 centimeter (cm.)
10	centimeters	=	1 decimeter (dm.)
10	decimeters	=	1 meter (m.)
1000	meter	=	1 kilometer (km.)

Measure of Weight

10	milligrams (mg.)	=	1 centigram (cg.)
10	centigrams	=	1 decigram (dg.)
10	decigrams	=	1 gram (g.)
10	grams	=	1 decagram (Dg.)
10	decagrams	=	1 hectogram (Hg.)
10	hectograms	=	1 Kilogram (Kg.)
1000	kilograms	=	1 (metric) ton (T.)

Surveyor's Square Measure

100	square meters (m.2)	=	1 are (ar.)
100	acres	=	1 hectare (har.)
100	hectares	=	1 sq. kilometer (Km.2)

Square Measure

100	sq. millimeters (mm.2)	=	1 sq. centimeter (cm.2)
100	sq. centimeters	=	1 sq. decimeter (dm.2)
100	sq. decimeters	=	1 sq. meter (m.2)

Cubic Measure

1000	cu. millimeters (mm.3)	=	1 cu. centimeter (cm.3)
1000	cu. centimeters	=	1 cu. decimeter (dm.3)
1000	cu. decimeters	=	1 cu. meter (m.3)

Dry and Liquid Measure

10	milliliters (ml.)	=	1 centiliter (cl.)
10	centiliters	=	1 deciliter (dl.)
10	deciliters	=	1 liter (l.)
100	liters	=	1 hectoliter (Hl.)

1 liter = 1 cubic decimeter = the volume of 1 kilogram of pure water at a temperature of 39.2 degrees F.

Metric System of Measurements (Continued)

Length Conversion Constants for Metric and U.S. Units

Millimeters X.039370 = inches.	Inches X 25.4001 = millimeters.
Meters x 39.370 = inches.	Inches X.0254 = meters.
Meters X 3.2808 = feet.	Feet x.30480 = meters.
Meters X 1.09361 = yards.	Yards X.91440 = meters.
Kilometers X 3,280.8 = feet.	Feet x.0003048 = kilometers.
Kilometers X.62137 = Statute Miles.	Statute Miles X 1.60935 = kilometers.
Kilometers x.53959 = Nautical Miles.	Nautical Miles x 1.85325 = kilometers.

Weight Conversion Constants for Metric and U.S. Units

Grams X 981 = dynes.	Dynes X.0010193 = grams.
Grams X 15.432 = grains.	Grains X.0648 = grams.
Grams X.03527 = ounces (Avd.).	Ounces (Avd.) X 28.35 = grams.
Grams x.033818 = fluid ounces (water).	Fluid Ounces (Water) X 29.57 = grams.
Kilograms X 35.27 = ounces (Avd.).	Ounces (Avd.) X.02835 = kilograms.
Kilograms X 2.20462 = pounds (Avd.).	Pounds (Avd.) X.45359 = kilograms.
Metric Tons (1000 Kg.) X 1.10231 = Net Ton (2000 lbs.).	Net Ton (2000 lbs.) X.90719 = Metric Tons (1000 Kg.).
Metric Tons (1000 Kg.) X.98421 = Gross Ton (2240 lbs.).	Gross Ton (2240 lbs.) X 1.01605 = Metric Tons (1000 Kg.).

Area Conversion Constants for Metric and U.S. Units

Square Millimeters X.00155 = square inches.	Square Inches X 645.163 = square millimeters.
Square centimeters X.155 = square inches.	Square Inches x 6.45163 = square centimeters.
Square Meters X 10.76387 = square feet.	Square Feet x.0929 = square meters.
Square Meters X 1.19599 = square yards.	Square Yards X.83613 = square meters.
Hectares X 2.47104 = acres.	Acres X.40469 = hectares.
Square Kilometers X 247.104 = acres.	Acres X.0040469 = square kilometers.
Square Kilometers X.3861 = square miles.	Square Miles X 2.5899 = square kilometers.

Volume Conversion Constants for Metric and U.S. Units

Cubic centimeters X.033818 = fluid ounces.	Fluid Ounces X 29.57 = cubic centimeters.
Cubic centimeters X.061023 = cubic inches.	Cubic Inches X 16.387 = cubic centimeters.
Cubic centimeters X.271 = fluid drams.	Fluid Drams x 3.69 = cubic centimeters.
Liters X 61.023 = cubic inches.	Cubic Inches X.016387 = liters.
Liters X 1.05668 = quarts.	Quarts x.94636 = liters.
Liters X .26417 = gallons.	Gallons x 3.78543 = liters.
Liters X.035317 = cubic feet.	Cubic Feet x 28.316 = liters.
Hectoliters X 26.417 = gallons.	Gallons x.0378543 = hectoliters.
Hectoliters X 3.5317 = cubic feet.	Cubic Feet x.28316 = hectoliters.
Hectoliters X 2.83794 = bushel (2150.42 cu. in.).	Bushels (2150.42 cu. in.) X.352379 = hectoliters.
Hectoliters X.1308 = cubic yards.	Cubic Yards x 7.645 = hectoliters.
Cubic Meters x 264.17 = gallons.	Gallons x.00378543 = cubic meters.
Cubic Meters x 35.317 = cubic feet.	Cubic Feet x.028316 = cubic meters.
Cubic Meters X 1.308 = cubic yards.	Cubic Yards x.7645 = cubic meters.

Power and Heat Conversion Constants for Metric and U.S. Units

Calorie x 0.003968 = B.T.U.	B.T.U. X 252 = calories.
Joules X.7373 = pound-feet.	Pound-Feet X 1.3563 = joules.
Newton-Meters X 8.851 = pound-inches	Pound-inches X.11298 = Newton-meters.
Cheval Vapeur X.9863 = Horsepower.	Horsepower X 1.014 = Cheval Vapeur.
Kilowatts X 1.34 = Horsepower.	Horsepower X.746 = kilowatts.
Kilowatt Hours X 3415 = B.T.U.	B.T.U. X.00029282 = kilowatt hours.
(Degrees Cent. X 1.8) +32 = degrees Fahr.	(Degrees Fahr. - 32) x.555 = degrees Cent.
(Degrees Reamur X 2.25) + 32 = degrees Fahr.	(Degrees Fahr. - 32) x.444 = degrees Reamur.

COMMON CONVERSION FACTORS USEFUL IN MECHANICAL POWER TRANSMISSION

Symbols and Abbreviations Used in Conversion Factors

Symbols and abbreviations found in this section are those currently used in many texts and product publications. Considerable effort is underway to standardize on abbreviations for metric and English units of measurement. Recently, ASTM (American Society for Testing and Materials) and IEEE (Institute of Electrical and Electronic Engineers) published a standard practice on the metric system. † This publication consolidates a great deal of the current thinking and provides a system of abbreviations and symbols that differ somewhat from those used here.

This Handbook has retained use of familiar abbreviations consistent with existing product and trade literature rather than the abbreviations found in current publications of technical and scientific societies.

Prefixes Used in the Metric System

Common prefixes and symbols used in the metric system are listed below. An example of use is 1000 meters is equivalent to 1 kilometer, and 1/1000 of one meter is equivalent to 1 millimeter.

Prefix	Symbol	Multiplication Factor-Decimal and Power of 10
exa	E	1,000,000,000,000,000,000 or 10^{18} or one quintillion
peta	P	1,000,000,000,000,000 or 10^{15} or one quadrillion
tera	T	1,000,000,000,000 or 10^{12} or one trillion
giga	G	1,000,000,000 or 10^{9} or one billion
mega	M	1,000,000 or 10^{6} or one million
kilo	k	1,000 or 10^{3} or one thousand
*hecto	h	100 or 10^{2} or one hundred
*deka	da	10 or 10^{1} or ten
**deci	d	0.1 or 10^{-1} or one tenth
**centi	c	0.01 or 10^{-2} or one hundredth
mill	m	0.001 or 10^{-3} or one thousandth
micro	μ	0.000,001 or 10^{-6} or one millionth
nano	n	0.000,000,001 or 10^{-9} or one billionth
pico	p	0.000,000,000,001 or 10^{-12} or one trillionth
femto	f	0.000,000,000,000,001 or 10^{-15} or one quadrillionth
atto	a	0.000,000,000,000,000,001 or 10^{-18} or one quintillionth

* Not commonly used.

** Not commonly used except for special situations.
The centimeter as a unit of length is in common use.
The decibel is a unit in both electrical and acoustical work.

† ASTM/IEEE Standard Metric Practice, ASTM E 380-75, IEEE Std. 268-1976.
"Reprinted with Permission of the Power Transmission Distributors Association"

Symbol or Abbreviation	Term
atm	atmosphere
avdp	avoirdupois
bbl	barrels
bu	bushels
C	degrees Centigrade or Celsius
cc	cubic centimeters
cfm	cubic feet per minute
cfs	cubic feet per second
cm	centimeter
cu	cubic
deg	degrees
F	degrees Fahrenheit
fps	feet per second
ft	feet
ft-lb	foot-pounds (work or energy)
ft per sec	feet per second (alternate)
ft per sec^2	feet per second per second
g	acceleration due to gravity
g	grams
gal	gallons
gpm	gallons per minute
hp	horsepower
hr	hour
in	inches
in-lb	inch-pounds (work or energy)
K	degrees Kelvin
kg	kilograms
km	kilometers
kn	knots
kW	kilowatts
l	liters
lb	pounds
lb-ft	pound-feet (torque)
m	meters
m per sec^2	meters per second per second
mi	miles
mm	millimeters
mph	miles per hour
MGD	millions of gallons per day
N	Newtons
oz	ounces
oz-in	ounce-inches (torque)
Pa	Pascals
psi	pounds per square inch
psia or psig	pounds per square inch "absolute" or gauge
pt	pint
qt	quart
R	degrees Rankine (Fahrenheit, absolute)
rad	radians
rev	revolutions
rpm	revolutions per minute
sec	seconds
sq	square
std	standard
temp	temperature
wt	weight
yd	yard
yr	year

Rounding of Numbers

A minimum of four significant figures are used in conversion factors presented here. Where the conversion factor is exact (for example, 1 foot contains 12 inches), decimal fractions are not necessary. Also, where large whole numbers are used (for example, 1 square kilometer contains 1195990 square yards), decimal fractions are not used unless justified by the accuracy of ordinary computations.

1195990	(sq yd in a sq km)
4389.12	(cc in a cu ft)
448.86	(gpm in a liter per sec)
14.70	(psi in an atmosphere)
0.4331	(psi in a ft of water)
0.0625	(lb-in in an oz-in)

VELOCITY

centimeters per second (cm per sec)	feet per second (fps or ft per sec)	0.3281
feet per second (fps)	centimeters per second (cm per sec)	30.48
	meters per second (m per sec)	0.3048
	kilometers per hour (km per hr)	1.097
	miles per hour (mph)	0.6818
kilometers per hour (km per hr)	knots (kn)	0.5396
	feet per second (fps)	1.467
	kilometers per hour (km per hr)	1.609
	feet per minute (ft per min.)	88
knots (kn)	miles per hour (mph)	1.152
	kilometers per hour (km per hr)	1.853
radians per second (rad per sec)	revolutions per minute (rpm)	9.55
	degrees per minute (deg per min.)	3437.7
revolutions per minute (rpm)	radians per second (rad per sec)	0.1047
	degrees per minute (deg per min.)	360

ACCELERATION

COLUMN A

To Convert From...	To...	Multiply Col. A by
feet per second per second (ft per sec^2)	meters per second per second (m per sec^2)	0.3048
m per sec^2	ft per sec^2	3.281
revolutions per minute per second (rpm per sec)	radians per second per second (rad per sec^2)	0.1047
rad per sec^2	rpm per sec	9.55

VOLUMETRIC FLOW RATES

gallons per minute, US (gpm)	liters per second (l per sec)	0.008434
	cubic feet per minute (cfm)	0.1337
	cubic feet per hour (cu ft per hr)	8.022
gallons per minute, UK or Canadian (gpm)	liters per second (l per sec)	0.0101
	cubic feet per minute (cfm)	0.1606
	cubic feet per hour (cu ft per hr)	9.634
cubic feet per second (cfs)	gpm (UK or Canadian)	373.77
	gpm (US)	448.86
	liters per second (l per sec)	1699.2
liters per second (l per sec)	cubic feet per minute (cfm)	2.119
	gpm (UK or Canadian)	13.20
	gpm (US)	15.85
millions of gallons per day, US (MGD)	liters per second (l per sec)	43.81
	cubic feet per minute (cfm)	92.85
	gallons per minute, US (gpm)	694.44

PRESSURE

pascals (Pa)	pounds per square inch (psi)	0.0001450
	pounds per square foot (lb per ft^2)	0.02089
	newtons per square meter	1
pounds per square inch (psi)	atmospheres, std. (atm)	0.0680
	pounds per square foot (lb per ft^2)	144
	pascals (Pa)	6894.8
	foot of water (ft of H20) 60F	2.301
atmospheres (atm), standard	psi	14.70
	lb per ft^2	2116.8
	Pa	101325
inch of water, 60F (in of H20)	psi	0.03609
	lb per ft^2	5.197
	Pa	248.84
foot of water, 60F (ft of H20)	psi	0.4331
	lb per ft^2	62.36
	Pa	2985.9

WEIGHT, MASS, INERTIA

pounds (lb)*	kilograms (kg)	0.4536
	ounces (oz)	16
kilograms (kg)	pounds (lb)	2.205
	ounces (oz)	35.27

WEIGHT, MASS, INERTIA, (Continued)

COLUMN A

Convert From	To	Multiply Col A By This Factor
tons (short)	metric tons	0.9072
	kilograms (kg)	907.2
	pounds (lb)	2000
metric tons	tons (short)	1.102
	kilograms	1000
	pounds	2205
pounds, weight (lb)	slugs, mass (lb-sec2 per ft)	0.03106
pound-foot2 (lb-ft2)	kilogram-meters2 (kg-m2)	0.04214

*pounds and ounces are avoirdupois

FORCE AND TORQUE

pounds (lb)	newtons(N)	4.448
newtons (N)	pounds (lb)	0.2248
newton-meters (N-m)	pound-feet (lb-ft)	0.7376
	pound-inches (lb-in)	8.851
	ounce-inches (oz-in)	141.60
ounce-inches (oz-in)	lb-ft.	0.005208
	N-m	0.007062
	lb-in	0.0625
pound-inches (lb-in)	lb-ft.	0.0833
	N-m	0.1298
	oz-ln	16
pound-feet (lb-ft)	N-m	1.356
	lb -in	12
	oz-ln	192

POWER

horsepower (hp)	kilowatts (kW)	0.7457
	foot-pounds per second (ft-lb per sec)	550
	foot-pounds per minute (ft-lb per min.)	33000
kilowatts (kW)	horsepower (hp)	1.341

TEMPERATURE

		Use This Relationship
degrees Fahrenheit (F)	degrees Celsius (C)	C =5/9 (F-32)
degrees Celsius (C)	degrees Fahrenheit (F)	F=9/5C+32
degrees Fahrenheit (F)	degrees Rankine (R)	R =F+459.69
degrees Celsius (C)	degrees Kelvin (K)	K=C+273.16

Examples:

1. Convert 12F to C. C = 5/9 (F-32) = 5/9 (12-32) = 5/9 (-20)
   Answer = -11.1C
2. Convert 40C to F. F = 9/5C + 32 = 9/5 (40) + 32 = 72 + 32
   Answer = 104F

GRAVITATIONAL CONSTANT

g = 32.174 feet per second per second (ft per sec2)
= 9.8067 meters per second per second (m per sec2)

APPROXIMATE DENSITIES OF COMMON MATERIALS

	REPRESENTATIVE DENSITIES Grams per cc	lb per cu ft
GASES @ 68F, std atm		
Air	1.30 grams per liter	0.07528
Oxygen	1.45 grams per liter	0.08305
Hydrogen	0.09 grams per liter	0.005234
Nitrogen	1.25 grams per liter	0.07274
	All Other Materials grams per cc	
LIQUIDS		
Water @ 4C	1.000 grams per cc	62.43
20C	0.998	62.32
40C	0.992	61.94
SeaWater	1.02-1.03	64.00
Ethyl alcohol 100%	0.789	49.2
Kerosene	0.78-0.82	50
Gasoline	0.70-0.75	45
METALS		
Aluminum (95% Al)	2.70	169
Bronze (90% Cu, 10% Zn)	8.80	549
Copper (Annealed, ACS)	8.89	555
Gold	19.32	1206
Iron, gray cast	7.10	443
Lead	11.36	709
Magnesium	1.74	109
Steel (0.4-0.5% Carbon)	7.80	487
Steel, 410 stainless	7.70	480
ENGINEERING PLASTICS		
ABS, general purpose	1.01-1.05	64
Acrylics, cast sheet	1.19	74
Nylon 6/6	1.13-1.15	71
Phenolic, general purpose	1.35-1.46	87
Polycarbonates, general purpose	1.2	75
Polyesters, thermoplastic, unreinforced	1.31 - 1.43	86
Polyehtylene, medium density	0.926-0.940	58
Polyvinyl Chloride	1.30-1.58	89

APPROXIMATE DENSITIES OF COMMON MATERIALS

	REPRESENTATIVE DENSITIES	
	Grams per cc	lb per cu ft
OTHER MATERIALS		
Concrete (stone and sand)	2.2-2.4	144
Limestone	1.5	94
Anthracite coal, not piled	1.4-1.8	100
Bituminous coal, not piled.	1.2-1.5	83
Lignite coal, not piled	1.1-1.4	78
Wood, air dried:		
Douglas fir	0.48-0.55	32
White oak	0.77	48
White maple	0.53	33
Oregon pine.	0.51	32
Hickory	0.74-0.80	48
Mahogany	0.56-0.85	44
African teak	0.99	62
Indian teak	0.66-0.88	48

Formulas and Constants

1 HP = 33,000 Foot-pounds of work per minute.

1 HP =.746 K.W. = K.W.P 1.341.

1 HP = 2547 B.T.U. per hour.

1 B.T.U. = Heat required to raise 1 lb. water 1-F.

1 B.T.U. = 777.6 Foot-pounds work.

1 Kilowatt Hour = 3415 B.T.U.

Heat Value of Carbon = 14,600 B.T.U. per pound.

Latent Heat of Fusion of Ice = 143.15 B.T.U. per pound.

Latent Heat of Evaporation of Water at 212° F. = 970.4 B.T.U. per pound.

Total Heat of Saturated Steam at atmospheric pressure = 1,150.4 B.T.U. per pound.

1 Ton of Refrigeration = 288,000 B.T.U. per 24 hours.

g = Acceleration of Gravity (commonly taken as 32.16 feet per second per second).

1 Radian = 57.296 degrees.

1 Meter = 100 cm. = 39.37 inches.

1 Kilometer =.62137 miles.

1 Gallon = 231 cubic inches.

1 Barrel = 31.5 gallons.

Atmospheric Pressure = 14.7 pounds per sq. in. = 29.92 inches mercury at 32º F.

1 Lb. per Sq. In. Pressure = 2.3095 feet fresh water at 62º F. = 2.0355 inches mercury at 32º F. = 2.0416 inches mercury at 62º F.

Water Pressure (pounds per sq. in.) =.433 X height of water in feet (Fresh water at 62ºF.).

Weight of 1 cu. ft. fresh Water = 62.355 lbs. at 62ºF. = 59.76 lbs. at 212º F.

Weight of 1 cu. ft. Air at 14.7 lbs. per sq. in. Pressure = .07608 lbs. at 62º F. =.08073 lbs. at 32º F.

† Also look in the General Index under Weights, Measures, or the subject material required.

Flywheel Formulas

Flywheels are used on some machines, for example air compressors, to even out load pulsations. The following formulas are useful in designing entire flywheels and flywheel rims. A V-belt sheave may also be used as a flywheel eliminating the need for a separate flywheel in the system.

Formulas for Entire Flywheel

Kinetic energy of rotation of a flywheel (foot pounds)
$=.0001705\ N^2(WR^2)^*$.

Torque to uniformly accelerate or decelerate a flywheel

$$= \frac{.03908\ (N_2 - N_1)\ (WR^2),\ ^*\ \text{pound-inches}}{t}$$

where N_2 = final R.P.M. and N_1 = initial R.P.M.
Velocity at outside diameter (feet per minute) = 0.2618 ND.

W = weight (pounds).

R = radius of gyration (feet).

N = speed (R.P.M.)

t = time to change from N_1 to N_2 (seconds).

F = face of rim (inches).

D = outside diameter of rim (inches).

d = inside diameter of rim (inches).

K = weight per cubic inch of material (pounds).

*WR^2 = flywheel effect (pounds X feet^2). See table to the right for WR^2 of rims. Ordinarily the WR^2 of the rim only is considered. In unusual instances the relatively small WR^2 values of the hub and arms or web can be added directly to the WR^2 of the rim if desired. To find the WR^2 of a hub or web use the WR^2 formula for rims, substituting the hub or web outside diameter, inside diameter, and width for D, d and F respectively. When arms are used instead of a web an approximate WR^2 value of the arms is the total weight of the arms in pounds times the square of the radius in feet from the shaft center line to the mid point of the arms between hub and rim.

Table 31: Formulas for Flywheel Rims

Property	Cast Iron Rim (Based on.26 lbs. per cu. in.)	Steel Rim (Based on .283 lbs. per cu. in.)	Rim of any material weighing K pounds per cubic inch
Volume (Cubic Inches)	$.7854F(D^2-d^2)$	$.7854F(D^2-d^2)$	$.7854F(D^2-d^2)$
W Weight (Pounds)	$.2042F(D^2-d^2)$	$.2223F(D^2-d^2)$	$.7854FK(D^2-d^2)$
R Radius of Gyration (Feet)	$\sqrt{\frac{.8681\ (D^2-d^2)}{1000}}$	$\sqrt{\frac{0.8681\ (D^2-d^2)}{1000}}$	$\sqrt{\frac{.8681\ (D^2-d^2)}{1000}}$
WR^2 Wt X Sq. of Radius of Gyration (Lbs. X Ft.^{2})	$\frac{.1773F(D^4-d^4)}{1000}$	$\frac{.1929F(D^4-d^4)}{1000}$	$\frac{.6818FK(D^4-d^4)}{1000}$
T ▲ Tensile Load in rim (Lbs.)	$\frac{.3078FN2(D^3-d^3)}{1000000}$	$\frac{.3350FN2(D^3-d^3)}{1000000}$	$\frac{1,184FKN2(D^3-d^3)}{1000000}$

▲ Centrifugal force causes this tensile load at each and every section of the rim. Hence, on rims split into two or more sections the fastening at each joint should be designed to take the full load as calculated from the formula here given.

Centrifugal Force

$$F = \frac{Wv^2}{gR} = \frac{WRN^2}{2933} = .000341\ WRN^2$$

R = Distance from the axis of rotation to the center of gravity of the body (feet).

N = Revolutions per minute.

v = Velocity of the center of gravity of the body (feet per second).

g = Acceleration due to gravity (32.16 commonly).

F = Centrifugal force tending to move the body outward from the axis of rotation (pounds).

W = Weight of body (pounds).

ENGINEERING

Torque and Horsepower Equivalents

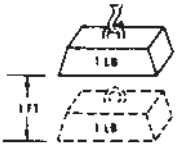

A foot-pound is the amount of energy expended in lifting a one-pound mass a distance of one foot against the pull of gravity

FOOT-POUNDS INDICATE ENERGY

TORQUE

It is: a turning moment or twisting effort.
Is it expressed in foot-pounds? or pound-feet?

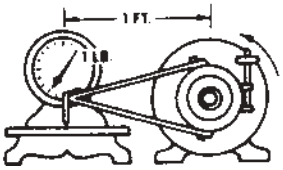

A pound-foot is the moment created by a force of one pound applied to the end of a lever arm one

POUND-FEET INDICATE TORQUE

Torque (in Pound-Inches) = $\frac{63025 \times HP}{RPM}$ = Force X Lever Arm (In Inches)

Torque (in Pound-Feet) = $\frac{5252 \times HP}{RPM}$ = Force X Lever Arm (In Feet)

Force = Working Load in Pounds.
FPM = Feet Per Minute.
RPM = Revolutions Per Minute.
Lever Arm = Distance from the Force to the center of rotation in Inches or Feet.

HORSEPOWER

Common Unit of Mechanical power - (HP)
One HP is the rate of work required to raise 33,000 pounds one foot in one minute

Example:

25 HP at 150 RPM = 10504 Pound-Inches Torque
2.5 HP at 150 RPM = 1050.4 Pound-Inches Torque

For other values of RPM move decimal point in RPM values to the left or right as desired, and in Torque values move to the right or left (opposite way) the same number of places.

Example:

25 HP at 150 RPM = 10504 Pound-Inches Torque
25 HP at 1.50 RPM = 1050400 Pound-Inches Torque
2.5 HP at 1.50 RPM = 105040 Pound-Inches Torque

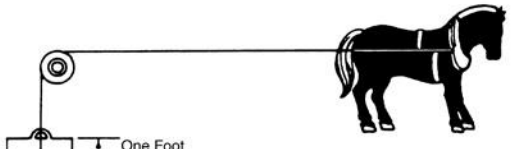

$HP = \frac{Force \times FPM}{33{,}000}$

$HP = \frac{Torque\ (in\ Pounds\text{-}Inches) \times RPM}{63{,}025}$

$HP = \frac{Torque\ (in\ Pounds\text{-}Feet) \times RPM}{5{,}252}$

Overhung Loads

An overhung load is a bending force imposed on a shaft due to the torque transmitted by V-drives, chain drives and other power transmission devices, other than flexible couplings.

Most motor and reducer manufacturers list the maximum values allowable for overhung loads. It is desirable that these figures be compared with the load actually imposed by the connected drive.

Overhung loads may be calculated as follows:

$$O.H.L. = \frac{63{,}000 \times HP \times F}{N \times R}$$

Where HP = Transmitted hp X service factor
N = RPM of shaft
R = Radius of sprocket, pulley. etc. (inches)
F = Factor (See chart to right)

Weights of the drive components are usually negligible. The formula is based on the assumption that the load is applied at a point equal to one shaft diameter from the bearing face. Factor F depends on the type of drive used:

F= { 1.00 for single chain drives.
1.3 for TIMING Belt Drives and Sync belt Drives.
1.25 for spur or helical gear or double chain drives.
1.50 for V-belt drives.
2.50 for flat belt drives.

Example: Find the overhung load imposed on a reducer by a double chain drive transmitting 7 hp @ 30 RPM. The pitch diameter of the sprocket is 10"; service factor is 1.3.
Solution:

$$O.H.L. = \frac{(63{,}000)\ (7 \times 1.3)\ (1.25)}{(30)\ (5)} = 4{,}780\ lbs.$$

Mathematical Equations

To find circumference of a circle, multiply diameter by 3.1416.
To find diameter of a circle, multiply circumference by .31831.
To find area of a circle, multiply square of diameter by .7854.
To find area of a rectangle, multiply length by breadth.
To find area of a triangle, multiply base by 1/2 perpendicular height.
To find area of ellipse, multiply product of both diameters by .7854.
To find area of parallelogram, multiply base by altitude.
To find side of an inscribed square, multiply diameter by 0.7071 or multiply circumference by 0.2251 or divide circumference by 4.4428.
To find side of inscribed cube, multiply radius of sphere by 1.1547.
To find side of an equal square, multiply diameter by .8862.
To find the surface of a sphere, square the diameter and multiply by 3.1416.
To find the volume of a sphere, cube the diameter and multiply by .5236.
A side of a square multiplied by 1.4142 equals diameter of its circumscribing circle.
A side of a square multiplied by 4.443 equals circumference of its circumscribing circle.

Table 32: Strength and Physical Properties of Various Metals

Metals and Alloys	Stress in Thousands of Pounds per Sq. Inch				Modulus of Elasticity Millions	Elongation%
	Tension Ultimate	Tension Yield Point	Compression Ultimate	Shear Ultimate		
Aluminum, Type 1100.0, Annealed	13	5	.....	9	10	45
Aluminum, Type 1100-H18, Hard	24	22	.....	13	10	15
Aluminum. Type 3003-0, Annealed	16	6	.....	11	10	40
Aluminum, Type 3003-H18, Hard	29	27	.....	16	10	10
Aluminum, Type 5052-0, Annealed	28	13	.....	18	10.20	30
Aluminum, Type 5052-H38, Hard	42	37	.....	24	10.20	8
Aluminum, Type 5056-0, Annealed	42	22	.....	26	10.30	35
Aluminum, Type 2014-0, Annealed	27	14	.....	18	10.60	18
Aluminum, Type 2014-T4, Heat Treated	62	42	.....	38	10.60	20
Aluminum, Type C4A, Casting. Solution Heat Treat	32	16	16▲	24	.....	8.50
Aluminum, Type S5C, As Die Cast	30	16	16▲	19	.....	9
Brass, Admiralty, Annealed	53	22	.....	.....	16	65
Brass, Aluminum, Annealed	60	27	.....	.....	16	55
Brass, Cartridge, 30% Zn, Annealed	44	11	.....	32	16	66
Brass, Cartridge, 30% Zn, Hard	76	63	.....	44	16	8
Brass, Naval, Annealed	57†	25†	.....	40 †	15	47†
Brass, Naval, Leaded, Annealed	57†	25†	.....	36 †	15	40†
Brass, Red, 15% Zn, Annealed	39	10	.....	31	17	48
Brass, Red, 15% Zn, Hard	70	57	.....	42	17	5
Brass, Red, Leaded, Cast, Grade 4A	33-46	17-24	10-12▲	.....	9.1-14.8	20-35
Brass, Red, Leaded, Cast, Grade 4B	30-38	12-17	11-12▲	.....	.....	15-27
Brass, Semi-Red, Leaded, Cast, Grade 5A	29-39	13-17	.....	.....	7.7-14.3	18-30
Brass, Semi-Red, Leaded, Cast, Grade 5B	30-40	12-16	8-10▲	.....	10-14	20-35
Brass, Yellow, 35% Zn, Annealed	46	14	.....	32	15	65
Brass, Yellow, 35% Zn, Hard	74	60	.....	43	15	8
Bronze, Aluminum, As Cast	67-95	27-45	.....	.....	15-18	5-35
Bronze, Commercial, 10% Zn, Annealed	37†	10†	.....	28 †	17	45=
Bronze, Manganese, Annealed	65†	30†	.....	42 v	15	33=
Bronze, Phosphor, Annealed	40-66	14-24	.....	.....	16-17	48-70
Bronze, Tin, High Leaded, Cast	23-38	11-22	12-16▲	.....	8.5-13	7-20
Bronze, Tin, Leaded, Cast	33-48	16-26	9-15▲	.....	10.6-16	15-40
Copper, Beryllium, Annealed	60-80	25-35v	.....	50-60 †	19	35-50†
Copper, Electrolytic, Tough Pitch, Annealed	32†	10†	.....	22 †	17	45†
Inconel, Cast	65-90	.....	.....	.....	23	10-20
Inconel, S, Cast	90-120	80-100	.....	.....	25	1-3
Inconel, Shapes, Plate, Etc., Annealed	80-100†	30-45†	.....	.....	31	35-55†
Inconel, X, Shapes, Plate, Etc., Annealed	110-130†	45-65†	.....	.....	31	40-55†
Iron, Cast, Class 30	30-34	.....	115	44	15	.....
Iron, Cast, Class 35	35-40	.....	125	43	16	.....
Iron, Ingot, Hot Rolled	44	23	.....	.....	29.80	47
Iron, Malleable, Class 32510	50	33	90	46	25	10-18
Iron, Malleable, Class 35018	55	37	90	51	25	18-25
Iron, Nodular (Ductile) Class 60-45-10	60	45	120	.....	22-25	10-25
Iron, Nodular (Ductile) Class 80-60-3	80	60	160	.....	22-25	3-10
Iron, Pearlitic, Malleable	60-90	40-70	.....	.....	28	3-12
Iron, Wrought, Hot Rolled	34-47	23-24	.....	.....	29	7-35
Lead, Hard, Rolled	4.0-4.6	.....	.....	.....	.....	31-48
Magnesium Alloy, Extruded, ASTM MIA	26-28	23-28	10-13	16	6.50	8-11
Magnesium Alloy, Extruded, ASTM AZ6IA-F	40-45	22-32	15-21	21	6.50	15-16
Magnesium Alloy, Cast, ASTM MIB	14	4.50	.....	11	6.50	5
Magnesium Alloy, Cast, ASTM AZ92A	24	14	.....	19	6.50	2
Magnesium Alloy, Cast, ASTM AZ9IA	36	23	.....	20	6.50	4

Table 32: Strength and Physical Properties of Various Metals

Metals and Alloys	Stress in Thousands of Pounds per Sq. Inch				Modulus of Elasticity Millions	Elongation%
	Tension Ultimate	Tension Yield Point	Compression Ultimate	Shear Ultimate		
Monel, Cast	65-90	32-45	.....	.....	23	20-50
Monel, S, Cast	120-145	80-130	.....	.....	24.20	1-4
Monel, Shapes, Plate, Etc., Annealed	70-85†	25-45†	.....	.....	26	35-50†
Monel, K, Shapes, Plate, Etc., Annealed	90-105†	40-65†	.....	26	25-45	35-55†
Muntz Metal, Cu 59.63%, Zn balance	54	21	.....	40	15	45
Nickel, Cast .	50-65	15-30	.....	.....	21.50	15-30
Nickel, Silver, Annealed	49-63†	18-30†	.....	.....	17-18	35-60†
Steel, Cast Carbon, Class 70,000 Normalized	70	38	.....	.....	30	28
Steel, Cast Low Alloy, Class 100,000, Normalized and Tempered	100	68	.....	.....	29-30	20
Steel, Cast Low Alloy, Class 120,000, Quenched and Tempered	120	95	.....	.....	29-30	16
Steel, Cast Low Alloy, Class 200,000, Quenched and Tempered	200	170	.....	.....	29-30	5
Steel, Sheets	48	25	.....	.....	29-30	18-27
Steel, Stainless, Austenitic, Types 304, 316	85	35	.....	.....	28	55-60
Steel, Stainless, Martensitic, Type 416	75	40	.....	.....	29	30
Steel, Structural, Bridge and Building, ASTM A7	60-72	33	33▲	45-54	29-30	21
Steel, Structural, High Strength, Low Alloy, ASTM A242	63-70	42-50	42-50▲	47-53	29-30	18-24
Zinc, Die Cast Alloy XXIII	41	.....	60▲	31	.....	10

† When hardened, strength values are higher, elongation less

▲ Compression yield point

Table 33: Properties of Sections

A = area
I = moment of inertia
J = polar moment of inertia
Z = section modulus π
k = radius of gyration
y = centroidal distance

Rectangle

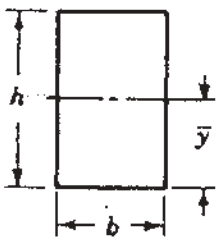

$A = bh$

$I = \frac{bh^3}{12}$

$Z = \frac{bh^2}{6}$

$k = 0.289h$

$\bar{y} = \frac{h}{2}$

Circle

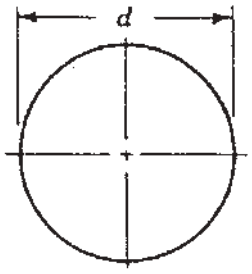

$A = \frac{\pi d^2}{4}$

$I = \frac{\pi d^4}{64}$

$Z = \frac{\pi d^3}{32}$

$J = \frac{\pi d^4}{32}$

$k = \frac{d}{4}$

$\bar{y} = \frac{d}{2}$

Triangle

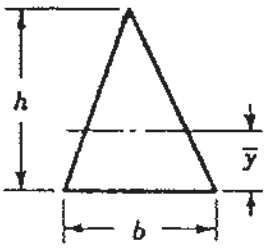

$A = \frac{bh}{2}$

$I = \frac{bh^3}{36}$

$Z = \frac{bh^2}{24}$

$k = 0.236h$

$\bar{y} = \frac{h}{3}$

Hollow Circle

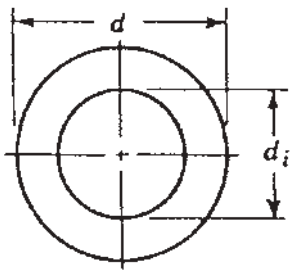

$A = \frac{\pi}{4}(d^2 - d_i^2)$

$I = \frac{\pi}{64}(d^4 - d_i^4)$

$Z = \frac{\pi}{32d}(d^4 - d_i^4)$

$J = \frac{\pi}{32}(d^4 - d_i^4)$

$k = \sqrt{\frac{d^2 - d_i^2}{16}}$

$\bar{y} = \frac{d}{2}$

Table 34: Coefficients of Friction "f"

Material	Static		Sliding	
	Dry	Lubricated	Dry	Lubricated
Aluminum on aluminum	1.35	....	....	....
Canvas belt on rubber lagging	0.30	....	....	....
Canvas belt, stitched, on steel	....	....	0.20	0.10
Canvas belt, woven, on steel	....	....	0.22	0.10
Cast iron on asbestos, fabric	....	....	....	....
brake material	....	....	0.35-0.40	....
Cast iron on brass	....	....	0.30	....
Cast iron on bronze	....	....	0.22	0.07-0.08
Cast iron on cast iron	1.10	....	0.15	0.06-0.10
Cast iron on copper	1.05	....	0.29	....
Cast iron on lead	....	....	0.43	....
Cast iron on leather	0.60	....		0.13-0.36
Cast iron on oak (parallel)	....	....	0.30-0.50	0.07-0.20
Cast iron on magnesium	....	....	0.25	....
Cast iron on steel, mild	....	0.18	0.23	1/0/00 3:11
Cast iron on tin	....	....	0.32	....
Cast iron on zinc	0.85	....	0.21	....
Earth on earth	0.25-1.0	....	....	....
Glass on glass	0.94	....	0.40	....
Hemp rope on wood	0.50-0.80	....	0.40-0.70	....
Nickel on nickel	1.10	....	0.53	0.12
Oak on leather (parallel)	0.50-0.60	....	0.30-0.50	....
Oak on oak (parallel)	0.62	....	0.48	0.16
Oak on oak (perpendicular)	0.54	....	0.32	0.07
Rubber tire on pavement	0.8-0.9	0.6-0.7 *	0.75-0.85	0.5-0.7*
Steel on ice	0.03	....	0.01	....
Steel, hard, on babbit	0.42-0.70	0.08-0.25	0.33-0.35	0.05-0.16
Steel, hard. on steel, hard	0.78	0.11-0.23	0.42	0.03-0.12
Steel, mild, on aluminum	0.61	....	0.47	....
Steel, mild, on brass	0.51	....	0.44	....
Steel, mild, on bronze	....	....	0.34	0.17
Steel, mild, on copper	0.53	....	0.36	0.18
Steel, mild, on steel, mild	0.74	....	0.57	0.09-0.19
Stone masonry on concrete	0.76	....	....	....
Stone masonry on ground	0.65	....	....	....
Wrought iron on bronze	0.19	0.07-0.08	0.18	....
Wrought iron on wrought iron	....	0.11	0.44	0.08-0.10

* Wet pavement

Table 35: U.S. Standard Sheet Metal Gages

Gage No.	Thickness in Decimal Parts of an Inch	Gage No.	Thickness in Decimal Parts of an Inch
1	.2813	20	.0359
2	.2656	21	.0329
3	.2391	22	.0299
4	.2242	23	.0269
5	.2092	24	.0239
6	.1943	25	.0209
7	.1793	26	.0179
8	.1644	27	.0164
9	.1495	28	.0149
10	.1345	29	.0135
11	.1196	30	.0120
12	.1046	31	.0109
13	.0897	32	.0102
14	.0747	33	.0094
15	.0673	34	.0086
16	.0598	35	.0078
17	.0538	36	0070
18	.0478	37	.0066
19	.0418	38	.0063

Hardness Comparison Chart

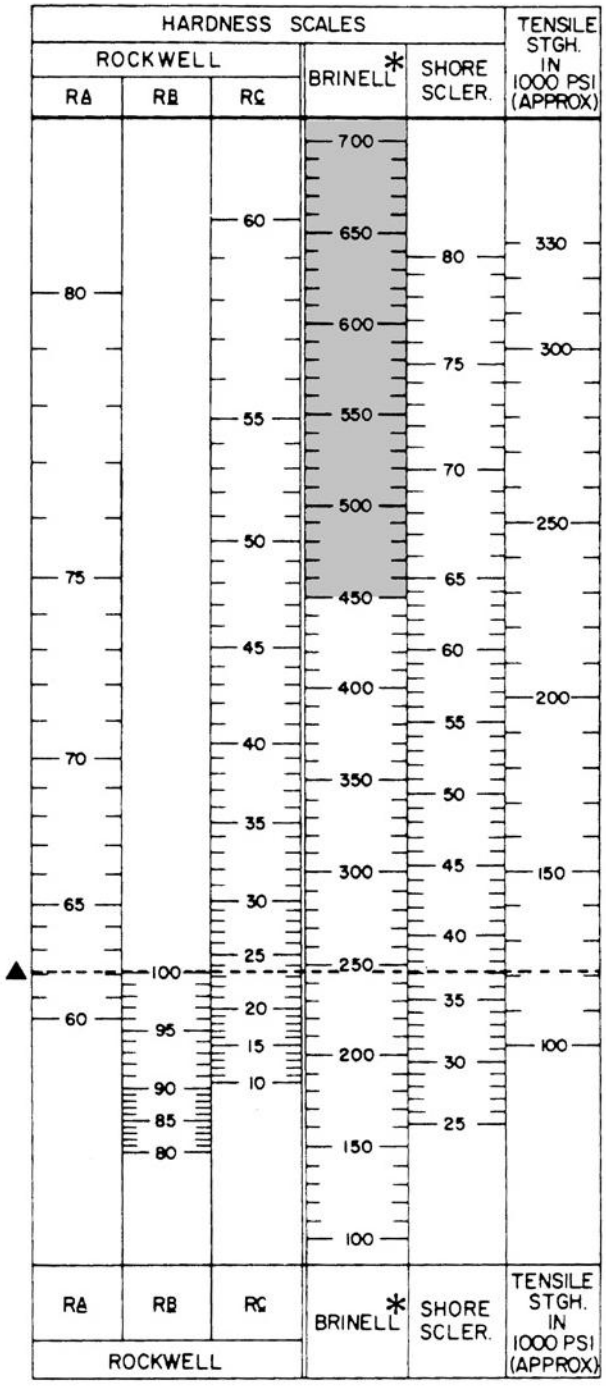

* Shaded area indicates values may vary depending on type of ball used.

▲ Example: A Brinell number of 245 is equal to 62 Rockwell "A", 100 Rockwell "B", 23 Rockwell "C", 37 Shore with a tensile of approximately 120,000 psi.

ENGINEERING

DODGE

Trigonometric Formula

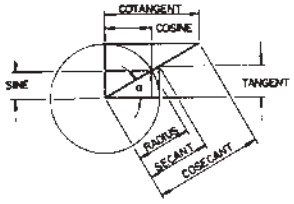

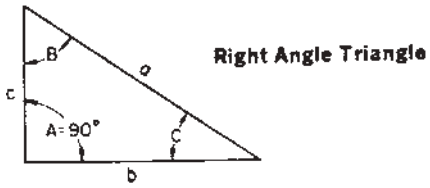

Table 36: Formulas for Finding Functions of Angles

Side opposite / Hypotenuse	=	SINE
Side adjacent / Hypotenuse	=	COSINE
Side opposite / Side adjacent	=	TANGENT
Side adjacent / Side opposite	=	COTANGENT
Hypotenuse / Side adjacent	=	SECANT
Hypotenuse / Side opposite	=	COSECANT

Table 37: Formulas for Finding Sides of Right Angle Triangles with an Angle and Side Known

To find: Length of side opposite	Hypotenuse x Sine Hypotenuse ÷ Coscant Side adjacent x Tangent Side adjacent ÷ Cotangent
To find: Length of side adjacent	Hypotenuse X Cosine Hypotenuse ÷ Secant Side opposite X Cotangent Side opposite ÷ Tangent
To find: Length of Hypotenuse	Side opposite X Cosecant Side opposite ÷ Sine Side adjacent X Secant Side adjacent ÷ Cosine

Table 38: To Find Angles and Sides of Right Angle Triangles

To Find Angles				To Find Angles		
To Find:	**Formulas**			**To Find:**	**Formulas**	
C	$\frac{c}{a}$	=	Sine C	a	$\sqrt{b^2 + c^2}$	- - -
C	$\frac{b}{a}$	=	Cosine C	a	c x Cosec. C	$\frac{c}{\text{Sine C}}$
C	$\frac{c}{b}$	=	Tan. C	a	c x Secant B	$\frac{c}{\text{Cosine B}}$
C	$\frac{b}{c}$	=	Cotan C	a	b x Cosec. B	$\frac{b}{\text{Sine B}}$
C	$\frac{a}{b}$	=	Secant C	a	b x Secant C	$\frac{b}{\text{Cosine C}}$
C	$\frac{a}{c}$	=	Cosec. C	b	$\sqrt{a^2 - c^2}$	- - -
B	$\frac{c}{a}$	=	Sine B	b	a x Sine B	$\frac{a}{\text{Cosecant B}}$
B	$\frac{c}{a}$	=	Cosine B	b	a x Cos. C	$\frac{a}{\text{Secant C}}$
B	$\frac{b}{c}$	=	Tan. B	b	c x Tan. B	$\frac{c}{\text{Cotangent B}}$
B	$\frac{c}{d}$	=	Cotan. B	b	c x Cot. C	$\frac{c}{\text{Tangent C}}$
B	$\frac{a}{c}$	=	Secant B	c	$\sqrt{a^2 - b^2}$	- - -
B	$\frac{a}{b}$	=	Cosec. B	c	a x Cos. B	$\frac{a}{\text{Secant B}}$
				c	a x Sine C	$\frac{a}{\text{Cosecant C}}$
				c	b x Cot. B	$\frac{b}{\text{Tangent B}}$
				c	b x Tan. C	$\frac{b}{\text{Cotangent C}}$

Table 39: To Find Angles and Sides of Oblique Angle Triangle

Oblique Angle Triangle

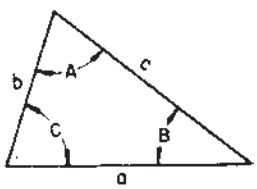

To Find Angles and Sides of Oblique Angle Triangle					
To find:	**Known**	**Formulas**	**To Find:**	**Known**	**Formulas**
C	A, B	180° (A + B)	A	B, C	180° - (B + C)
b	a, B, A	$\frac{\text{a x Sin. B}}{\text{Sin A}}$	Cos. A	a, b, c	$\frac{b^2 + c^2 - a^2}{2bc}$
c	a, A, C	$\frac{\text{a x Sin. C}}{\text{Sin. A}}$	Sin. C	c, A, a	$\frac{\text{c x Sin. A}}{\text{a}}$
Tan. A	a, C, b	$\frac{\text{a x Sin. C}}{\text{b - (a x Cos. C)}}$	Cot. B	a, C, b	$\frac{\text{a x Cosec. C}}{\text{b}}$
B	A, C	180° - (A + C)	c	b, C, B	b x Sin. C x Cosec. B
Sin. B	b, A, a	$\frac{\text{b x Sin. A}}{\text{a}}$	- - -	- - -	- - - - -

NEMA QUICK REFERENCE CHART

- Dimensions are for reference only
- Drawings represent standard TEFC general purpose motors

Contact your local DODGE/Reliance Sales Office at 1-864-284-5700 for "C" dimensions.

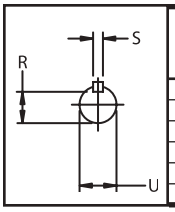

FRAME		NEMA SHAFT	KEYSEAT DIMENSIONS		FRAME		NEMA SHAFT	KEYSEAT DIMENSIONS	
		U	R	S			U	R	S
48	48	1/2	29/64	FLAT	284T	286T	1-7/8	1-19/32	1/2
56	56	5/8	33/64	3/16	324T	326T	2-1/8	1-27/32	1/2
143T	145T	7/8	49/64	3/16	364T	365T	2-3/8	2-1/64	5/8
182T	184T	1-1/8	63/64	1/4	404T	405T	2-7/8	2-29/64	3/4
213T	215T	1-3/8	1-13/64	5/16	444T	445T	3-3/8	2-7/8	7/8
254T	256T	1-5/8	1-13/32	3/8	447T	449T	3-3/8	2-7/8	7/8

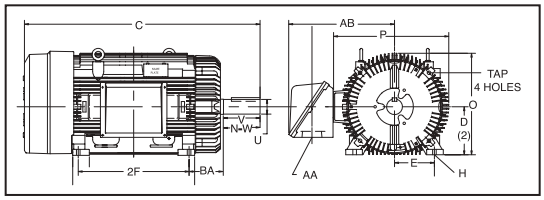

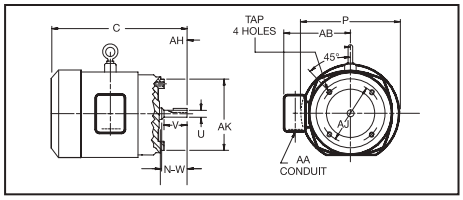

NEMA C-FACE	BA Dimensions
143TC - 145TC	2-3/4
182TC - 184 TC	3-1/2
213TC - 215TC	4-1/4
254TC- 256TC	4-3/4

NEMA Frame	D	E	2F	H	N-W	O	P	U	Keyway	V	AA	AB	AH	AJ	AK	BA	Tap Size
48	3	2-1/8	2-3/4	11/32 SLOT	1-1/2	5-13/16	5-5/8	1/2		1-1/2	1/2	-	1-11/16	3-3/4	3	2-1/2	1/4-20
56	3-1/2	2-7/16	3	11/32	1-7/8	8-9/16	7-9/32	5/8	3/16x3/32	1-7/8	1/2	-	2-1/16	5-7/8	4-1/4	2-3/4	3/8-16
56H	3-1/2	2-7/16	5	SLOT	1-7/8	8-9/16	7-9/32	5/8	3/16x3/32	1-7/8	1/2	-	2-1/16	5-7/8	4-1/2	2-3/4	3/8-16
143T	3-1/2	2-7/16	4	11/32	2-1/4	8-9/16	7-9/32	7/8	3/16x3/32	2-1/4	3/4	-	2-1/8	5-7/8	4-1/2	2-1/4	3/8-16
145T	3-1/2	2-3/4	5	11/32	2-1/4	8-9/16	7-9/32	7/8	3/16x3/32	2-1/4	3/4	-	2-1/8	5-7/8	4-1/2	2-1/4	3/8-16
182	4-1/2	3-3/4	4-1/2	13/32	2-1/4	9-7/8	9-1/4	7/8	3/16x3/32	2-1/4	3/4	8-7/16	2-1/8	5-7/8	4-1/2	2-3/4	3/8-16
184	4-1/2	3-3/4	5-1/2	13/32	2-1/4	9-7/8	9-1/4	7/8	3/16x3/32	2-1/4	3/4	8-7/16	2-1/8	5-7/8	4-1/2	2-3/4	3/8-16
182T	4-1/2	3-3/4	4-1/2	13/32	2-3/4	9-7/8	9-1/4	1-1/8	1/4x1/8	2-3/4	3/4	7-13/16	2-5/8	7-1/4	8-1/2	2-3/4	1/2-13
184T	4-1/2	3-3/4	5-1/2	13/32	2-3/4	9-7/8	9-1/4	1-1/8	1/4x1/8	2-3/4	3/4	7-13/16	2-5/8	7-1/4	8-1/2	2-3/4	1/2-13
213	5-1/4	4-1/4	5-1/2	13/32	3	11-1/4	10-1/2	1-1/8	1/4x1/8	3	1	9-5/16	2-3/4	7-1/4	8-1/2	3-1/2	1/2-13
215	5-1/4	4-1/4	7	13/32	3	11-1/4	10-1/2	1-1/8	1/4x1/8	3	1	9-5/16	2-3/4	7-1/4	8-1/2	3-1/2	1/2-13
213T	5-1/4	4-1/4	5-1/2	13/32	3-3/8	11-1/4	10-1/2	1-3/8	5/16x5/32	3-3/8	1	8-11/16	3-1/8	7-1/4	8-1/2	3-1/2	1/2-13
215T	5-1/4	4-1/4	7	13/32	3-3/8	11-1/4	10-1/2	1-3/8	5/16x5/32	3-3/8	1	8-11/16	3-1/8	7-1/4	8-1/2	3-1/2	1/2-13
254U	6-1/4	5	8-1/4	17/32	3-3/4	13-1/4	13-1/4	1-3/8	5/16x5/32	3-3/4	1-1/4	10-13/16	3-1/2	7-1/4	8-1/2	4-1/4	1/2-13
256U	6-1/4	5	10	17/32	3-3/4	13-1/4	13-1/4	1-3/8	5/16x5/32	3-3/4	1-1/4	10-13/16	3-1/2	7-1/4	8-1/2	4-1/4	1/2-13
254T	6-1/4	5	8-1/4	17/32	4	13-1/4	13-1/4	1-5/8	3/8x3/16	4	1-1/4	10-3/4	3-3/4	7-1/4	8-1/2	4-1/4	1/2-13
256T	6-1/4	5	10	17/32	4	13-1/4	13-1/4	1-5/8	3/8x3/16	4	1-1/4	10-3/4	3-3/4	7-1/4	8-1/2	4-1/4	1/2-13
284U	7	5-1/2	9-1/2	17/32	4-7/8	14-3/4	14-7/8	1-5/8	3/8x3/16	4-7/8	1-1/2	12-5/8	4-5/8	9	10-1/2	4-3/4	1/2-13
286U	7	5-1/2	11	17/32	4-7/8	14-3/4	14-7/8	1-5/8	3/8x3/16	4-7/8	1-1/2	12-5/8	4-5/8	9	10-1/2	4-3/4	1/2-13
284T	7	5-1/2	9-1/2	17/32	4-5/8	14-3/4	14-7/8	1-7/8	1/2x1/4	4-5/8	1-1/2	12-3/4	4-3/8	9	10-1/2	4-3/4	1/2-13
286T	7	5-1/2	11	17/32	4-5/8	14-3/4	14-7/8	1-7/8	1/2x1/4	4-5/8	1-1/2	12-3/4	4-3/8	9	10-1/2	4-3/4	1/2-13
284TS	7	5-1/2	9-1/2	17/32	3-1/4	14-3/4	14-7/8	1-5/8	3/8x3/16	3-1/4	1-1/2	12-3/4	3	9	10-1/2	4-3/4	1/2-13
286TS	7	5-1/2	11	17/32	3-1/4	14-3/4	14-7/8	1-5/8	3/8x3/16	3-1/4	1-1/2	12-3/4	3	9	10-1/2	4-3/4	1/2-13
324U	8	6-1/4	10-1/2	21/32	5-5/8	16-11/16	17	1-7/8	1/2x1/4	5-5/8	2	15-7/16	5-3/8	11	12-1/2	5-1/4	5/8-11
326U	8	6-1/4	12	21/32	5-5/8	16-11/16	17	1-7/8	1/2x1/4	5-5/8	2	15-7/16	5-3/8	11	12-1/2	5-1/4	5/8-11
324T	8	6-1/4	10-1/2	21/32	5-1/4	16-11/16	17	2-1/8	1/2x1/4	5-1/4	2	15-3/16	5	11	12-1/2	5-1/4	5/8-11
326T	8	6-1/4	12	21/32	5-1/4	16-11/16	17	2-1/8	1/2x1/4	5-1/4	2	15-3/16	5	11	12-1/2	5-1/4	5/8-11
324TS	8	6-1/4	10-1/2	21/32	3-3/4	16-11/16	17	1-7/8	1/2x1/4	3-3/4	2	15-3/16	3-1/2	11	12-1/2	5-1/4	5/8-11
326TS	8	6-1/4	12	21/32	3-3/4	16-11/16	17	1-7/8	1/2x1/4	3-3/4	2	15-3/16	3-1/2	11	12-1/2	5-1/4	5/8-11
364U	9	7	11-1/4	21/32	6-3/8	18-1/2	19-1/2	2-1/8	1/2x1/4	6-3/8	2-1/2	18	6-1/8	11	12-1/2	5-7/8	5/8-11
365U	9	7	12-1/4	21/32	6-3/8	18-1/2	19-1/2	2-1/8	1/2x1/4	6-3/8	2-1/2	18	6-1/8	11	12-1/2	5-7/8	5/8-11
364T	9	7	11-1/4	21/32	5-7/8	18-1/2	19-1/2	2-3/8	5/8x5/16	5-7/8	2-1/2	18-1/16	5-5/8	11	12-1/2	5-7/8	5/8-11
365T	9	7	12-1/4	21/32	5-7/8	18-1/2	19-1/2	2-3/8	5/8x5/16	5-7/8	2-1/2	18-1/16	5-5/8	11	12-1/2	5-7/8	5/8-11
364TS	9	7	11-1/4	21/32	3-3/4	18-1/2	19-1/2	1-7/8	1/2x1/4	3-3/4	2-1/2	18-1/16	3-1/2	11	12-1/2	5-7/8	5/8-11
365TS	9	7	12-1/4	21/32	3-3/4	18-1/2	19-1/2	1-7/8	1/2x1/4	3-3/4	2-1/2	18-1/16	3-1/2	11	12-1/2	5-7/8	5/8-11
404U	10	8	12-1/4	13/16	7-1/8	21-5/16	22-1/2	2-3/8	5/8x5/16	7-1/8	3	19-1/4	6-7/8	11	12-1/2	6-5/8	5/8-11
405U	10	8	13-3/4	13/16	7-1/8	21-5/16	22-1/2	2-3/8	5/8x5/16	7-1/8	3	19-1/4	6-7/8	11	12-1/2	6-5/8	5/8-11
404T	10	8	12-1/4	13/16	7-1/4	21-5/16	22-1/2	2-7/8	3/4x3/8	7-1/4	3	19-5/16	7	11	12-1/2	6-5/8	5/8-11
405T	10	8	13-3/4	13/16	7-1/4	21-5/16	22-1/2	2-7/8	3/4x3/8	7-1/4	3	19-5/16	7	11	12-1/2	6-5/8	5/8-11
404TS	10	8	12-1/4	13/16	4-1/4	21-5/16	22-1/2	2-1/8	1/2x1/4	4-1/4	3	19-5/16	4	11	12-1/2	6-5/8	5/8-11
405TS	10	8	13-3/4	13/16	4-1/4	21-5/16	22-1/2	2-1/8	1/2x1/4	4-1/4	3	19-5/16	4	11	12-1/2	6-5/8	5/8-11
444U	11	9	14-1/2	13/16	8-5/8	23-3/8	25-1/4	2-7/8	3/4x3/8	8-5/8	3	22-3/16	8-3/8	14	16	7-1/2	5/8-11
445U	11	9	16-1/2	13/16	8-5/8	23-3/8	25-1/4	2-7/8	3/4x3/8	8-5/8	3	22-3/16	8-3/8	14	16	7-1/2	5/8-11
444T	11	9	14-1/2	13/16	8-1/2	23-3/8	25-1/4	3-3/8	7/8x7/16	8-1/2	3	23-3/8	8-1/4	14	16	7-1/2	5/8-11
445T	11	9	16-1/2	13/16	8-1/2	23-3/8	25-1/4	3-3/8	7/8x7/16	8-1/2	3	23-3/8	8-1/4	14	16	7-1/2	5/8-11
447T	11	9	20	13/16	8-1/2	23-5/8	26	3-3/8	7/8x7/16	8-1/2	3	23-7/8	8-1/4	14	16	7-1/2	5/8-11
449T	11	9	25	13/16	8-1/2	23-5/8	26	3-3/8	7/8x7/16	8-1/2	3	23-7/8	8-1/4	14	16	7-1/2	5/8-11
444TS	11	9	14-1/2	13/16	4-3/4	23-3/8	25-1/4	2-3/8	5/8x5/16	4-3/4	3	23-3/8	4-1/2	14	16	7-1/2	5/8-11
445TS	11	9	16-1/2	13/16	4-3/4	23-3/8	25-1/4	2-3/8	5/8x5/16	4-3/4	3	23-3/8	4-1/2	14	16	7-1/2	5/8-11
447TS	11	9	20	13/16	4-3/4	23-5/8	26	2-3/8	5/8x5/16	4-3/4	4 NPT	23-7/8	4-1/2	14	16	7-1/2	5/8-11
449TS	11	9	25	13/16	4-3/4	23-5/8	26	2-3/8	5/8x5/16	4-3/4	4 NPT	23-7/8	4-1/2	14	16	7-1/2	5/8-11

ENGINEERING

IEC QUICK REFERENCE CHART

- Dimensions are for reference only
- Drawings represent standard TEFC general purpose motors

Contact your local DODGE/Reliance Sales Office at 1-864-284-5700 for "C" dimensions.

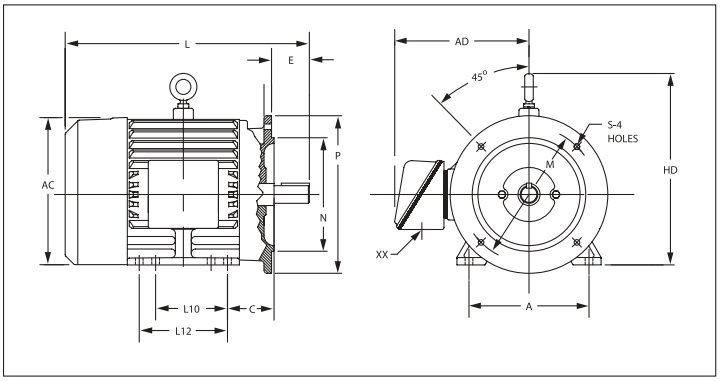

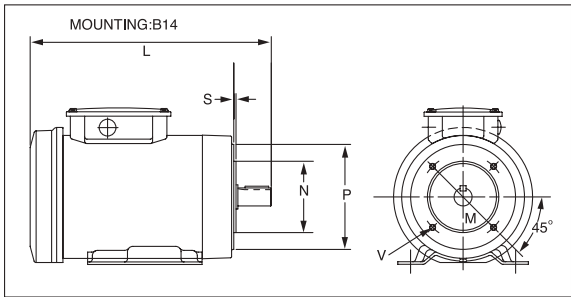

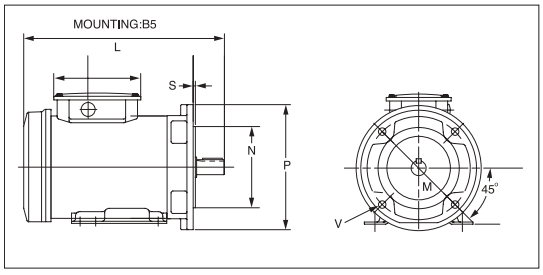

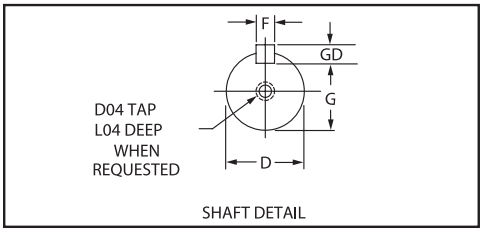

KEY AND KEYSEAT DIMENSIONS

FRAME	D	G	F	GD	FRAME	D	G	F	GD
71	14	11	5	5	160	37	42	12	8
80	19	15.5	6	6	180	48	42.5	14	9
90	24	20	8	7	200	55	49	16	10
100	28	24	8	7	225	60	53	18	11
112	28	24	8	7	250	70	67.5	20	12
132	38	33	10	8	280	80	71	22	14

Frame	B3 RIGID BASE					SHAFT		B5 FLANGE					B14 FACE					GENERAL		
	A	L10	L12	HD	C	E	D	N	M	P	S	V	N	M	P	S	V	AC	AD	XX
71	–	–	–	–	–	–	–	110	130	160	"3,5"	"9,5"	70	85	105	2.5	M6	143	–	13
80	125	100	–	188	50	40	19	130	165	200	"3,5"	"11,5"	80	100	120	3	M6	143	–	13
90	140	100	125	208	56	50	24	130	165	200	"3,5"	"11,5"	95	115	140	3	M8	163	–	13
100	160	112	140	229	63	60	28	180	215	250	4	14	110	130	160	3.5	M8	175	–	19
112S	190	114	–	301.8	71.4	60	28	180	215	250	4	14	110	130	160	3.5	M8	243	210	32
112M	190	–	140	301.8	71.4	60	28	180	215	250	4	14	110	130	160	3.5	M8	243	210	32
132S	216	140	–	336.6	88.9	80	38	230	265	300	4	14	130	165	200	3.5	M8	286	243	32
132M	216	–	178	336.6	88.9	80	38	230	265	300	4	14	130	165	200	3.5	M8	286	243	32
160M	254	210	–	399	108	110	42	250	300	350	5	18	180	215	250	4	M12	324	320	40
160L	254	–	254	399	108	110	42	250	300	350	5	18	180	215	250	4	M12	324	320	40
180M	279	241	–	436	121	110	48	250	300	350	5	18	398	355	40			398	355	40
180L	279	–	279	436	121	110	48	250	300	350	5	18	398	355	40			398	355	40
200M	318	267	–	486	133	110	55	300	350	400	5	18	442	445	50			442	445	50
200L	318	–	305	486	133	110	55	300	350	400	5	18	442	445	50			442	445	50
225S	356	286	–	545	149	140	60	350	400	450	5	18	490	470	50			490	470	50
225M	356	–	311	545	149	140	60	350	400	450	5	18	490	470	50			490	470	50
250S	406	311	–	616	168	140	65											600	510	63
250M	406	–	349	616	168	140	65											600	535	63
280S	457	368	-	677	190	140	75											650	535	63
280M	457	-	419	677	190	140	75											650	535	63
280K	457	500	-	677	190	140	75											650	535	63
280H	457	630	-	677	190	140	75											650	535	63
L280H	457	635	-	677	202	205	75											650	535	63

LEGEND
Metric Dimensions in MM
1 mm = .03937"

PART NUMBER INDEX

Part Number	Page
004060	B17-42
004063	B17-42
004066	B17-42
004069	B17-42
004072	B17-42
004075	B17-42
004078	B17-42
004081	B17-42
004084	B17-42
004087	B17-42
004090	B17-42
004093	B17-42
004096	B17-42
004099	B17-42
004102	B17-42
004105	B17-42
004108	B17-42
004113	B17-42
004114	B17-42
004115	B17-42
004116	B17-42
005050	B17-37
005051	B17-37
005052	B17-37
005053	B17-37
005055	B17-37
005056	B17-37
005057	B17-37
005058	B17-37
005059	B17-37
005060	B17-37
005061	B17-37
005062	B17-37
005063	B17-37
005064	B17-37
005065	B17-37
005066	B17-37
005067	B17-37
005068	B17-37
005070	B17-50
005073	B17-50
005076	B17-50
005079	B17-50
005082	B17-50
005085	B17-51
005088	B17-51
005091	B17-51
005094	B17-51
005097	B17-51
005100	B17-51
005117	B17-37
005195	B17-51
005198	B17-51
005199	B17-51
005201	B17-51
006001	B17-40
006004	B17-40
006007	B17-40
006010	B17-40
006013	B17-40
006016	B17-40
006019	B17-40
006022	B17-40
006025	B17-40
006028	B17-40
006031	B17-40
006034	B17-40
006037	B17-40
006040	B17-40
006043	B17-40
006046	B17-40
006049	B17-40
006052	B17-40
006055	B17-40
006058	B17-40
006061	B17-40
006064	B17-40
006067	B17-40
006070	B17-40
006073	B17-40
006076	B17-40
006079	B17-40
006082	B17-40
006102	B17-38
006104	B17-38
006107	B17-38
006109	B17-38
006110	B17-38
006111	B17-38
006113	B17-38
006114	B17-38
006115	B17-38
006117	B17-38
006118	B17-38
006119	B17-38
006120	B17-38
006124	B17-38
006125	B17-38
006128	B17-38
006129	B17-38
006132	B17-38
006136	B17-38
006140	B17-38
006144	B17-38
006148	B17-38
006152	B17-38
010020	B17-57
010021	B17-57
010024	B17-57
010028	B17-57
010029	B17-57
010032	B17-57
010036	B17-57
010039	B17-57
010043	B17-57
010048	B17-57
010051	B17-57
010054	B17-57
010055	B17-57
010056	B17-57
010057	B17-57
010058	B17-57
010059	B17-57
010060	B17-57
010061	B17-57
010075	B17-57
010076	B17-57
010077	B17-57
010078	B17-57
010080	B17-57
010081	B17-57
010084	B17-57
010085	B17-57
010088	B17-57
010089	B17-57
010092	B17-57
010093	B17-57
010096	B17-57
010097	B17-57
010100	B17-57
010104	B17-57
010105	B17-57
010107	B17-57
010110	B17-57
010112	B17-57
010114	B17-57
010117	B17-57
010120	B17-57
010123	B17-57
010126	B17-57
010127	B17-57
010128	B17-57
010129	B17-57
010130	B17-57
010131	B17-57
012215	B17-46
012216	B17-46
012217	B17-46
012302	B4-82
012303	B4-82
012340	B4-82
012341	B4-82
012342	B4-82
012343	B4-82
013497	B19-24, B19-25
013498	B19-24, B19-25
013499	B19-24, B19-25
013511	B19-24, B19-25
013512	B19-24, B19-25
013513	B19-24, B19-25
013514	B19-24, B19-25
013515	B19-24, B19-25
013519	B19-24, B19-25
013520	B19-24, B19-25
013900	B19-24, B19-25
013901	B19-24, B19-25
013902	B19-24, B19-25
013903	B19-24, B19-25
013904	B19-24, B19-25
013905	B19-24, B19-25
013906	B19-24, B19-25
013907	B19-24, B19-25
013908	B19-24, B19-25
013909	B19-24, B19-25
013910	B19-24, B19-25
013916	B19-24, B19-25
013917	B19-24, B19-25
013918	B19-24, B19-25
019200	B19-27, B19-28
019201	B19-27, B19-28
019202	B19-27, B19-28
019203	B19-27, B19-28
019204	B19-27, B19-28
019210	B19-27, B19-28
019211	B19-27, B19-28
019212	B19-27, B19-28
019213	B19-27, B19-28
019214	B19-27, B19-28
019220	B19-27, B19-28
019221	B19-27, B19-28
019222	B19-27, B19-28
019223	B19-27, B19-28
019224	B19-27, B19-28
019230	B19-27, B19-28
019231	B19-27, B19-28
019232	B19-27, B19-28
019233	B19-27, B19-28
019234	B19-27, B19-28
019240	B19-27, B19-28
019241	B19-27, B19-28
019242	B19-27, B19-28
019243	B19-27, B19-28
019244	B19-27, B19-28
019250	B19-27, B19-28
019251	B19-27, B19-28
019252	B19-27, B19-28
019253	B19-27, B19-28
019254	B19-27, B19-28
019260	B19-27, B19-28
019261	B19-27, B19-28
019262	B19-27, B19-28
019263	B19-27, B19-28
019264	B19-27, B19-28
019270	B19-27, B19-28
019271	B19-27, B19-28
019272	B19-27, B19-28
019273	B19-27, B19-28
019274	B19-27, B19-28
019280	B19-27, B19-28
019281	B19-27, B19-28
019282	B19-27, B19-28
019283	B19-27, B19-28
019284	B19-27, B19-28
021218	B17-46
021219	B17-46
021220	B17-46
22208	B16-8
22209	B16-8
22210	B16-8
22211	B16-8

PART NUMBER INDEX

Part Number	Page	Part Number	Page	Part Number	Page	Part Number	Page
22213	B16-8	023058	B10-23	023118	B10-27	023179	B10-41
22215	B16-8	023059	B10-23	023119	B10-27	023180	B10-41
22218	B16-8	023060	B10-23	023120	B10-29	023181	B10-41
22220	B16-8	023061	B10-23	023121	B10-29	023182	B10-41
22222	B16-8	023062	B10-23	023122	B10-29	023183	B10-41
22226	B16-8	023063	B10-23	023123	B10-29	023184	B10-41
22228	B16-8	023064	B10-23	023124	B10-29	023186	B10-41
22232	B16-8	023065	B10-23	023125	B10-29	023187	B10-41
023000	B10-23	023066	B10-23	023126	B10-29	023188	B10-41
023001	B10-23	023067	B10-23	023127	B10-29	023189	B10-41
023002	B10-23	023068	B10-23	023128	B10-29	023190	B10-41
023003	B10-23	023069	B10-23	023129	B10-29	023192	B10-41
023004	B10-23	023070	B10-25	023130	B10-29	023193	B10-41
023005	B10-23	023071	B10-25	023131	B10-29	023194	B10-41
023006	B10-23	023072	B10-25	023132	B10-29	023195	B10-41
023007	B10-23	023073	B10-25	023133	B10-29	023196	B10-41
023008	B10-23	023074	B10-25	023134	B10-29	023197	B10-41
023009	B10-23	023075	B10-25	023135	B10-29	023198	B10-41
023010	B10-23	023076	B10-31	023136	B10-29	023199	B10-41
023011	B10-23	023077	B10-31	023137	B10-29	023200	B10-41
023012	B10-23	023078	B10-31	023138	B10-29	023201	B10-41
023013	B10-23	023079	B10-31	023139	B10-29	023203	B10-41
023014	B10-23	023080	B10-31	023140	B10-29	023204	B10-41
023015	B10-23	023081	B10-31	023141	B10-29	023205	B10-41
023016	B10-23	023082	B10-31	023142	B10-29	023206	B10-41
023017	B10-23	023083	B10-31	023143	B10-29	023208	B10-41
023018	B10-23	023084	B10-31	023144	B10-29	023209	B10-41
023019	B10-23	023085	B10-31	023145	B10-29	023210	B10-41
023020	B10-23	023086	B10-31	023146	B10-29	023212	B10-43
023021	B10-23	023087	B10-31	023147	B10-29	023214	B10-43
023022	B10-23	023088	B10-31	023148	B10-29	023215	B10-43
023023	B10-25	023089	B10-31	023149	B10-33	023219	B10-43
023024	B10-25	023090	B10-31	023150	B10-33	023220	B10-43
023025	B10-25	023091	B10-31	023151	B10-33	023221	B10-43
023026	B10-25	023092	B10-31	023152	B10-33	023223	B10-43
023027	B10-25	023093	B10-27	023153	B10-33	023224	B10-43
023028	B10-25	023094	B10-27	023154	B10-33	023227	B10-43
023029	B10-25	023095	B10-27	023155	B10-33	023228	B10-43
023030	B10-25	023096	B10-27	023156	B10-33	023230	B10-43
023031	B10-25	023097	B10-27	023157	B10-33	023232	B10-43
023032	B10-25	023098	B10-27	023158	B10-33	023234	B10-43
023033	B10-25	023099	B10-27	023159	B10-33	023236	B10-43
023040	B10-25	023100	B10-27	023160	B10-33	023237	B10-43
023041	B10-25	023101	B10-27	023161	B10-33	023241	B10-43
023042	B10-25	023102	B10-27	023162	B10-33	023242	B10-43
023043	B10-25	023103	B10-27	023163	B10-33	023243	B10-43
023044	B10-25	023104	B10-27	023164	B10-33	023245	B10-43
023045	B10-25	023105	B10-27	023165	B10-33	023246	B10-43
023046	B10-25	023106	B10-27	023166	B10-33	023249	B10-43
023047	B10-23	023107	B10-27	023167	B10-41	023250	B10-43
023048	B10-23	023108	B10-27	023168	B10-41	023252	B10-43
023049	B10-23	023109	B10-27	023170	B10-41	023254	B10-43
023050	B10-23	023110	B10-27	023171	B10-41	023256	B10-47
023051	B10-23	023111	B10-27	023172	B10-41	023261	B10-47
023052	B10-23	023112	B10-27	023173	B10-41	023263	B10-47
023053	B10-23	023113	B10-27	023174	B10-41	023265	B10-47
023054	B10-23	023114	B10-27	023175	B10-41	023266	B10-47
023055	B10-23	023115	B10-27	023176	B10-41	023269	B10-47
023056	B10-23	023116	B10-27	023177	B10-41	023270	B10-47
023057	B10-23	023117	B10-27	023178	B10-41	023271	B10-45

PART NUMBER INDEX

Part Number	Page
023272	B10-45
023273	B10-45
023274	B10-45
023275	B10-45
023276	B10-45
023277	B10-45
023278	B10-45
023279	B10-45
023280	B10-45
023281	B10-45
023282	B10-45
023283	B10-45
023284	B10-45
023285	B10-45
023286	B10-45
023287	B10-45
023288	B10-45
023289	B10-45
023290	B10-45
023291	B10-45
023292	B10-45
023293	B10-45
023294	B10-45
023295	B10-45
023296	B10-45
023297	B10-45
023298	B10-45
023299	B10-45
023300	B10-45
023301	B10-45
023302	B10-45
023303	B10-45
023304	B10-45
023305	B10-45
023306	B10-45
023307	B10-45
023308	B10-45
023309	B10-45
023310	B10-45
023311	B10-45
023312	B10-45
023314	B10-49
023316	B10-49
023318	B10-49
023322	B10-49
023325	B10-49
023327	B10-49
023329	B10-51
023330	B10-51
023331	B10-51
023332	B10-51
023333	B10-51
023334	B10-51
023335	B10-51
023337	B10-51
023338	B10-51
023339	B10-51
023340	B10-51
023341	B10-51
023342	B10-51
023343	B10-51
023344	B10-51
023345	B10-51
023346	B10-51
023347	B10-51
023349	B10-51
023350	B10-51
023352	B10-53
023353	B10-53
023354	B10-53
023356	B10-53
023357	B10-53
023360	B10-53
023361	B10-53
023362	B10-53
023363	B10-53
023364	B10-53
023365	B10-53
023366	B10-53
023367	B10-53
023368	B10-53
023369	B10-53
023376	B10-51
023377	B10-51
023378	B10-51
023379	B10-51
023380	B10-51
023381	B10-51
023382	B10-51
023384	B10-51
023385	B10-51
023386	B10-51
023387	B10-51
023388	B10-51
023389	B10-51
023390	B10-51
023391	B10-51
023392	B10-51
023393	B10-51
023394	B10-51
023396	B10-51
023397	B10-51
023399	B10-53
023400	B10-53
023401	B10-53
023403	B10-53
023404	B10-53
023407	B10-53
023408	B10-53
023409	B10-53
023410	B10-53
023411	B10-53
023412	B10-53
023413	B10-53
023414	B10-53
023415	B10-53
023416	B10-53
023425	B10-55
023431	B10-55
023432	B10-55
023433	B10-55
023435	B10-55
023436	B10-55
023439	B10-55
023440	B10-55
023443	B10-55
023445	B10-55
023447	B10-55
023448	B10-55
023449	B10-55
023454	B10-55
023460	B10-55
023461	B10-55
023462	B10-55
023464	B10-55
023465	B10-55
023468	B10-55
023469	B10-55
023472	B10-55
023474	B10-55
023476	B10-55
023477	B10-55
023478	B10-55
023480	B10-57
023481	B10-57
023482	B10-57
023483	B10-57
023484	B10-57
023485	B10-57
023486	B10-57
023487	B10-57
023488	B10-57
023489	B10-57
023490	B10-57
023491	B10-57
023492	B10-57
023493	B10-57
023494	B10-57
023495	B10-57
023496	B10-57
023497	B10-57
023498	B10-57
023499	B10-57
023500	B10-57
023501	B10-57
023502	B10-57
023503	B10-57
023504	B10-57
023505	B10-57
023506	B10-57
023507	B10-57
023508	B10-51, B10-57
023509	B10-51, B10-57
023510	B10-51, B10-57
023511	B10-51, B10-57
023512	B10-51, B10-57
023513	B10-51, B10-57
023514	B10-51, B10-57
023515	B10-57
023516	B10-51, B10-57
023517	B10-51, B10-57
023518	B10-51, B10-57
023519	B10-51, B10-57
023520	B10-51, B10-53, B10-57
023521	B10-51, B10-53, B10-57
023522	B10-51, B10-53, B10-57
023523	B10-51, B10-57
023524	B10-51, B10-53, B10-57
023525	B10-51, B10-53, B10-57
023526	B10-51, B10-57
023527	B10-57
023528	B10-51, B10-53, B10-57
023529	B10-51, B10-53, B10-57
023530	B10-53, B10-57
023531	B10-53, B10-57
023532	B10-53, B10-57
023533	B10-53, B10-57
023534	B10-53, B10-57
023535	B10-53, B10-57
023536	B10-53, B10-57
023537	B10-53, B10-57
023538	B10-57
023539	B10-57
023540	B10-57
023541	B10-57
023542	B10-57
023543	B10-57
023545	B10-57
023546	B10-57
023547	B10-57
023548	B10-57
023550	B10-57
023552	B10-57
023553	B10-57
023554	B10-57
023556	B10-57
023557	B10-57
023558	B10-57
023559	B10-57
023560	B10-57
023561	B10-57
023564	B10-57
023565	B10-57
023566	B10-57
023567	B10-57
023568	B10-57
023569	B10-57
023570	B10-57
023571	B10-57
023584	B10-61
023585	B10-61
023586	B10-61
023587	B10-61

PART NUMBER INDEX

Part Number	Page
023588	B10-61
023589	B10-61
023590	B10-61
023603	B10-61
023604	B10-61
023605	B10-61
023606	B10-61
023607	B10-61
023608	B10-61
023609	B10-61
023610	B10-61, B10-63
023611	B10-61, B10-63
023612	B10-61, B10-63
023613	B10-61, B10-63
023614	B10-61, B10-63
023615	B10-61, B10-63
023616	B10-61, B10-63
023620	B10-75
023621	B10-75
023622	B10-75
023623	B10-75
023624	B10-75
023625	B10-75
023626	B10-75
023627	B10-75
023628	B10-75
023629	B10-75
023630	B10-75
023631	B10-75
023632	B10-75
023633	B10-75
023634	B10-75
023635	B10-75
023636	B10-75
023637	B10-75
023638	B10-75
023639	B10-75
023640	B10-75
023641	B10-75
023690	B10-25
023691	B10-25
023692	B10-25
023693	B10-25
023694	B10-25
023695	B10-25
023700	B10-77
023701	B10-77
023702	B10-77
023703	B10-77
023704	B10-77
023705	B10-77
023706	B10-77
023707	B10-77
023708	B10-77
023709	B10-77
023710	B10-77
023711	B10-77
023712	B10-77
023713	B10-77
023714	B10-77
023715	B10-77
023795	B10-65
023796	B10-65
023797	B10-65
023798	B10-65
023799	B10-65
023800	B10-65
023801	B10-65
032867	B2-76
032868	B2-76
032871	B2-76
032872	B2-76
032874	B2-76
032875	B2-76
032876	B2-76
032877	B2-76
032878	B2-76
032879	B2-76
032881	B2-76
032882	B2-76
032886	B2-76
032887	B2-76
032923	B17-15
032937	B17-15
032940	B17-12
032941	B17-12
032942	B17-12
032943	B17-12
032945	B17-12
032946	B17-12
032947	B17-12
032949	B17-12
032950	B17-12
032951	B17-12
032953	B17-12
032954	B17-12
032955	B17-12
032956	B17-12
032957	B17-12
032959	B17-12
032960	B17-12
032970	B17-12
032971	B17-12
032972	B17-12
032973	B17-12
032975	B17-12
032976	B17-12
032977	B17-12
032979	B17-12
032980	B17-12
032981	B17-12
032983	B17-12
032984	B17-12
032985	B17-12
032986	B17-12
032987	B17-12
032989	B17-12
032990	B17-12
033077	B17-10
033085	B17-16
033086	B17-16
033087	B17-16
033088	B17-16
033089	B17-16
033090	B17-16
033091	B17-16
033092	B17-16
033093	B17-16
033094	B17-16
033095	B17-16
033096	B17-16
033097	B17-16
033098	B17-16
033185	B17-16
033186	B17-16
033187	B17-16
033188	B17-16
033189	B17-16
033190	B17-16
033191	B17-16
033192	B17-16
033193	B17-16
033194	B17-16
033195	B17-16
033196	B17-16
033197	B17-16
033198	B17-16
033200	B17-18
033201	B17-18
033202	B17-18
033203	B17-18
033204	B17-18
033205	B17-18
033206	B17-18
033207	B17-18
033208	B17-18
033209	B17-18
033210	B17-18
033211	B17-18
033212	B17-18
033213	B17-18
033214	B17-18
033215	B17-18
033216	B17-18
033217	B17-18
033218	B17-18
033247	B17-14
033251	B17-14
033260	B17-18
033261	B17-18
033262	B17-18
033263	B17-18
033264	B17-18
033265	B17-18
033266	B17-18
033267	B17-18
033268	B17-18
033269	B17-18
033270	B17-18
033271	B17-18
033272	B17-18
033273	B17-18
033274	B17-18
033275	B17-18
033276	B17-18
033277	B17-18
033278	B17-18
033321	B17-15
033323	B17-15
033347	B17-14
033351	B17-14
033475	B17-14
033480	B17-14
033485	B17-14
033490	B17-14
033500	B17-14
033505	B17-14
033510	B17-14
033515	B17-14
033525	B17-14
033530	B17-14
033535	B17-14
033540	B17-14
033585	B17-26
033586	B17-26
033587	B17-26
033588	B17-26
033589	B17-26
033590	B17-26
033591	B17-26
033592	B17-26
033593	B17-26
033594	B17-26
033595	B17-26
033596	B17-26
033597	B17-26
033598	B17-26
033599	B17-26
033600	B17-26
033601	B17-26
033602	B17-26
033610	B17-26
033611	B17-26
033612	B17-26
033613	B17-26
033614	B17-26
033615	B17-26
033616	B17-26
033617	B17-26
033618	B17-26
033619	B17-26
033620	B17-26
033621	B17-26
033622	B17-26
033623	B17-26
033624	B17-26
033625	B17-26
033626	B17-26
033627	B17-26
033667	B17-10

PART NUMBER INDEX

Part Number	Page
033668	B17-10
033669	B17-10
033670	B17-10
033672	B17-10
033673	B17-10
033674	B17-10
033676	B17-10
033677	B17-10
033678	B17-10
033680	B17-10
033681	B17-10
033682	B17-10
033683	B17-10
033684	B17-10
033686	B17-10
033687	B17-10
033688	B17-10
033692	B17-32
033693	B17-32
033694	B17-32
033695	B17-32
033696	B17-33
033697	B17-33
033698	B17-33
033699	B17-33
033739	B17-24
033740	B17-24
033741	B17-24
033742	B17-24
033743	B17-24
033744	B17-24
033745	B17-24
033750	B17-24
033751	B17-24
033752	B17-24
033753	B17-24
033754	B17-24
033755	B17-24
033756	B17-24
033810	B17-20
033811	B17-20
033812	B17-20
033813	B17-20
033814	B17-20
033815	B17-20
033816	B17-20
033817	B17-20
033818	B17-20
033819	B17-20
033820	B17-20
033821	B17-20
033822	B17-20
033823	B17-20
033824	B17-20
033825	B17-20
033826	B17-20
033840	B17-20
033841	B17-20
033842	B17-20
033843	B17-20
033844	B17-20
033845	B17-20
033846	B17-20
033847	B17-20
033848	B17-20
033849	B17-20
033850	B17-20
033851	B17-20
033852	B17-20
033853	B17-20
033854	B17-20
033855	B17-20
033856	B17-20
033862	B17-15
033863	B17-15
033867	B17-15
033868	B17-15
033869	B17-15
033870	B17-22
033871	B17-22
033872	B17-22
033873	B17-22
033874	B17-22
033875	B17-22
033876	B17-22
033877	B17-22
033878	B17-22
033879	B17-22
033880	B17-22
033881	B17-22
033882	B17-22
033883	B17-22
033884	B17-22
033885	B17-22
033886	B17-22
033887	B17-22
033888	B17-22
033890	B17-31
033891	B17-31
033892	B17-31
033893	B17-31
033894	B17-31
033895	B17-31
033896	B17-31
033897	B17-31
033899	B17-15
033900	B17-31
033901	B17-31
033902	B17-31
033903	B17-31
033904	B17-31
033905	B17-31
033906	B17-31
033907	B17-31
033910	B17-22
033911	B17-22
033912	B17-22
033913	B17-22
033914	B17-22
033915	B17-22
033916	B17-22
033917	B17-22
033918	B17-22
033919	B17-22
033920	B17-22
033921	B17-22
033922	B17-22
033923	B17-22
033924	B17-22
033925	B17-22
033926	B17-22
033927	B17-22
033928	B17-22
033929	B17-15
033930	B17-15
033931	B17-15
033932	B17-15
033933	B17-15
033934	B17-15
033937	B17-30
033938	B17-30
033939	B17-30
033940	B17-30
033952	B17-30
033953	B17-30
033954	B17-30
033955	B17-30
033960	B17-29
033961	B17-29
033962	B17-29
033963	B17-29
033964	B17-29
033965	B17-29
033966	B17-29
033967	B17-29
033968	B17-29
033974	B17-10
033977	B17-10
033978	B17-10
033979	B17-10
033980	B17-10
033982	B17-10
033983	B17-10
033984	B17-10
033986	B17-10
033987	B17-10
033988	B17-10
033990	B17-10
033991	B17-10
033992	B17-10
033993	B17-10
033994	B17-10
033996	B17-10
033997	B17-10
033998	B17-10
034020	B19-44
034021	B19-44
034022	B19-44
034023	B19-44
034024	B19-44
034025	B19-44
034030	B17-54, B19-44
034031	B17-54, B19-44
034032	B17-54, B19-44
034033	B17-54, B19-44
034034	B17-54, B19-44
034035	B17-54, B19-44
034117	B17-26
034218	B17-16
034221	B17-10
034225	B17-10
034226	B17-10
034227	B17-10
034228	B17-10
034229	B17-10
034230	B17-10
034231	B17-10
034232	B17-10
034233	B17-10
034234	B17-10
034235	B17-10
034236	B17-10
034237	B17-10
034238	B17-10
034239	B17-10
034240	B17-10
034241	B17-10
034242	B17-10
034243	B17-10
034244	B17-12
034245	B17-12
034246	B17-12
034247	B17-12
034248	B17-12
034249	B17-12
034250	B17-12
034251	B17-12
034252	B17-12
034253	B17-12
034254	B17-12
034255	B17-12
034256	B17-12
034257	B17-12
034258	B17-12
034259	B17-12
034260	B17-16
034261	B17-16
034262	B17-16
034263	B17-16
034264	B17-16
034265	B17-16
034266	B17-16
034267	B17-16
034268	B17-16
034269	B17-16
034270	B17-16
034271	B17-16
034272	B17-16
034273	B17-18
034274	B17-18

PART NUMBER INDEX

Part Number	Page	Part Number	Page	Part Number	Page	Part Number	Page
034275	B17-18	034444	B17-28	034729	B2-73	035433	B15-95
034276	B17-18	034445	B17-28	034730	B2-73	035437	B15-112
034277	B17-18	034446	B17-28	034731	B2-73	035438	B15-112
034278	B17-18	034447	B17-28	034732	B2-73	035439	B15-112
034279	B17-18	034448	B17-28	034735	B2-73	035744	B15-113, B15-119
034280	B17-18	034449	B17-28	034736	B2-74	035745	B15-113, B15-119
034281	B17-18	034450	B17-28	034737	B2-74	035747	B15-113, B15-119
034282	B17-18	034451	B17-28	034738	B2-74	035748	B15-113, B15-119
034283	B17-18	034452	B17-28	034739	B2-74	035749	B15-113, B15-119
034284	B17-18	034453	B17-28	034740	B2-74	035750	B15-113, B15-119
034285	B17-18	034454	B17-26	034741	B2-74	035751	B15-113, B15-119
034286	B17-18	034455	B17-26	034748	B2-71	035752	B15-113, B15-119
034287	B17-18	034456	B17-26	034749	B2-71	035762	B15-50
034288	B17-18	034457	B17-26	034750	B2-71	035763	B15-50
034289	B17-18	034458	B17-26	034751	B2-71	035764	B15-50
034290	B17-18	034459	B17-26	034752	B2-71	035765	B15-50
034291	B17-18	034460	B17-26	034754	B2-71	035766	B15-50
034292	B17-18	034461	B17-26	034755	B2-72	035767	B15-50
034293	B17-20	034462	B17-26	034756	B2-72	035768	B15-50
034294	B17-20	034463	B17-26	034757	B2-72	035769	B15-50
034295	B17-20	034464	B17-26	034758	B2-72	035770	B15-50
034296	B17-20	034465	B17-26	034759	B2-75	035771	B15-51
034297	B17-20	034466	B17-26	034760	B2-75	035772	B15-51
034298	B17-20	034467	B17-26	034761	B2-75	035773	B15-51
034299	B17-20	034468	B17-26	034762	B2-75	035774	B15-51
034300	B17-20	034469	B17-26	034763	B2-75	035775	B15-50
034303	B17-20	034470	B17-26	034765	B2-75	035776	B15-50
034304	B17-20	034471	B17-26	034766	B2-73	035777	B15-50
034305	B17-20	034472	B17-26	034767	B2-73	035778	B15-50
034306	B17-20	034473	B17-26	034768	B2-73	035779	B15-50
034307	B17-20	034525	B17-26	034769	B2-73	035780	B15-50
034308	B17-20	034596	B17-12	034770	B2-73	035781	B15-51
034309	B17-20	034597	B17-12	034772	B2-73	035782	B15-51
034310	B17-20	034598	B17-12	034773	B2-74	035783	B15-51
034313	B17-22	034599	B17-12	034774	B2-74	035784	B15-51
034314	B17-22	034700	B2-71	034775	B2-74	035785	B15-51
034315	B17-22	034701	B2-71	034776	B2-74	035786	B15-51
034316	B17-22	034702	B2-71	035025	B17-55	035787	B15-51
034317	B17-22	034703	B2-71	035026	B17-55	035788	B15-51
034318	B17-22	034704	B2-71	035027	B17-55	035789	B15-51
034319	B17-22	034705	B2-71	035028	B17-55	035790	B15-51
034320	B17-22	034706	B2-71	035029	B17-55	035791	B15-51
034321	B17-22	034709	B2-71	035030	B17-55	035915	B15-112
034322	B17-22	034710	B2-72	035031	B17-56	035916	B15-112
034323	B17-22	034711	B2-72	035032	B17-56	035917	B15-112
034324	B17-22	034712	B2-72	035033	B17-56	035929	B15-95
034325	B17-22	034713	B2-72	035034	B17-56	035930	B15-95
034326	B17-22	034714	B2-72	035035	B17-56	035931	B15-95
034327	B17-22	034715	B2-72	035036	B17-56	035943	B15-85
034328	B17-22	034716	B2-75	035083	B17-56	035944	B15-85
034329	B17-22	034717	B2-75	035107	B17-55	035945	B15-85
034330	B17-22	034718	B2-75	035108	B17-55	035946	B15-85
034331	B17-22	034719	B2-75	035116	B17-56	036054	B11-17
034332	B17-22	034720	B2-75	035117	B17-56	036116	B11-17
034438	B17-28	034721	B2-75	035183	B15-85	036118	B11-17
034439	B17-28	034722	B2-75	035185	B15-85	036119	B11-17
034440	B17-28	034725	B2-75	035417	B15-85	036120	B11-17
034441	B17-28	034726	B2-73	035418	B15-85	036121	B11-17
034442	B17-28	034727	B2-73	035431	B15-95	036180	B19-45
034443	B17-28	034728	B2-73	035432	B15-95	036181	B19-45

PART NUMBER INDEX

Part Number	Page
036182	B19-45
036183	B19-45
036184	B19-45
036185	B19-45
036186	B19-45
036187	B19-45
036188	B19-45
036193	B19-45
036194	B19-45
036196	B19-45
036197	B19-45
036198	B19-45
036199	B19-45
036200	B19-45
036270	B19-45
036274	B19-45
036350	B19-21
036351	B19-21
036352	B19-21
036353	B19-21
036354	B19-21
036355	B19-21
036356	B19-21
036357	B19-21
036358	B19-21
036359	B19-21
036360	B19-21
036361	B19-21
036362	B19-21
036363	B19-21
036364	B19-21
036365	B19-21
036366	B19-21
036367	B19-21
036567	B5-20
037001	B17-48
037002	B17-48
037003	B17-48
037004	B17-48
037005	B17-48
037006	B17-48
037007	B17-48
037009	B17-48
037010	B17-48
037011	B17-48
037012	B17-48
037013	B17-48
037017	B17-48
037020	B17-48
037022	B17-48
037024	B17-48
037026	B17-48
037426	B15-84
037427	B15-84
037428	B15-84, B15-85
037429	B15-85
037430	B15-85
037431	B15-85
037432	B15-84
037433	B15-84
037434	B15-84
037435	B15-84
037436	B15-84, B15-85
037437	B15-84, B15-85
037438	B15-85
037439	B15-85
037440	B15-85
037441	B15-85
037442	B15-84
037443	B15-84
037444	B15-84
037446	B15-84
037447	B15-84
037448	B15-84
037449	B15-84, B15-85
037450	B15-84, B15-85
037451	B15-85
037452	B15-85
037461	B15-84
037462	B15-84
037464	B15-84
037465	B15-84
037540	B10-59
037541	B10-59
037542	B10-59
037543	B10-59
037544	B10-59
037545	B10-59
037546	B10-59
037547	B10-59
037548	B10-61, B10-67
037549	B10-61
037550	B10-61, B10-67
037551	B10-61, B10-67
037552	B10-61, B10-67
037553	B10-61, B10-67
037554	B10-61, B10-67
037555	B10-59
037556	B10-59
037557	B10-59
037558	B10-59
037559	B10-59
037560	B10-59
037561	B10-59
037562	B10-59
037563	B10-61
037564	B10-61
037565	B10-61
037566	B10-61
037567	B10-61
037568	B10-61
037569	B10-61
037580	B10-59
037581	B10-59
037582	B10-59
037583	B10-59
037584	B10-59
037585	B10-59
037586	B10-59
037587	B10-59
037588	B10-59
037589	B10-59
037590	B10-59
037591	B10-59
037592	B10-59
037593	B10-59
037594	B10-59
037595	B10-59
037596	B10-59
037597	B10-59
037598	B10-59
037599	B10-59
037600	B10-59
037601	B10-59
037602	B10-59
037603	B10-59
037604	B10-61
037605	B10-61
037606	B10-61
037607	B10-61
037608	B10-61
037609	B10-61
037610	B10-61
037611	B10-61
037612	B10-61
037613	B10-61
037614	B10-61
037615	B10-61
037616	B10-61
037617	B10-61
037618	B10-61
037619	B10-61
037620	B10-61
037621	B10-61
037622	B10-61
037623	B10-61
037624	B10-61
037625	B10-61
037626	B10-61
037627	B10-61
037628	B10-61
037629	B10-61
037630	B10-61
037631	B10-61
037632	B10-59, B10-63
037633	B10-59, B10-63
037634	B10-59, B10-63
037635	B10-59, B10-63
037636	B10-59, B10-61, B10-63
037637	B10-59, B10-61, B10-63
037638	B10-59, B10-61, B10-63
037639	B10-59, B10-61, B10-63
037640	B10-59, B10-61, B10-63
037641	B10-59, B10-61, B10-63
037642	B10-59, B10-61, B10-63
037643	B10-59, B10-61, B10-63
037644	B10-61, B10-63
037645	B10-61, B10-63
037646	B10-61, B10-63
037647	B10-61, B10-63
037648	B10-61, B10-63
037649	B10-61, B10-63
037650	B10-64
037651	B10-64
037652	B10-64
037653	B10-64
037654	B10-64
037655	B10-64
037656	B10-64
037657	B10-64
037658	B10-64
037659	B10-64
037660	B10-64
037673	B10-64
037674	B10-64
037681	B10-66
037682	B10-66
037683	B10-66
037684	B10-66
037685	B10-66
037686	B10-66
037687	B10-66
037688	B10-66
037689	B10-66
037690	B10-66
037850	B14-54
037851	B14-54
037852	B14-54
037853	B14-54
037854	B14-54
037855	B14-54
037856	B14-54
037857	B14-54
037901	B14-54
037902	B14-54
037903	B14-54
037904	B14-54
037905	B14-54
037906	B14-54
037907	B14-54
037908	B14-54
037909	B14-54
037910	B14-54
037911	B14-54
037912	B14-54
037913	B14-54
037914	B14-54
037915	B14-54
037916	B14-54
037917	B14-54
037918	B14-54
037919	B14-54

PART NUMBER INDEX

Part Number	Page
037920	B14-54
037921	B14-54
037922	B14-54
037923	B14-54
037924	B14-54
037925	B14-102
037926	B14-102
037927	B14-102
037928	B14-102
037929	B14-102
037930	B14-102
037931	B14-102
037932	B14-102
037933	B14-102
037934	B14-102
037935	B14-102
037936	B14-102
037937	B14-102
037938	B14-102
037939	B14-102
037940	B14-102
038060	B19-12
038061	B19-12
038062	B19-12
038063	B19-12
038064	B19-12
038070	B19-12
038071	B19-12
038072	B19-12
038073	B19-12
038074	B19-12
038075	B19-12
038076	B19-12
038077	B19-12
038078	B19-12
038109	B19-8
038110	B19-8
038111	B19-8
038112	B19-8
038113	B19-8
038114	B19-8
038115	B19-8
038116	B19-8
038117	B19-8
038118	B19-8
038119	B19-8
038200	B19-11
038201	B19-11
038202	B19-11
038203	B19-11
038204	B19-11
038205	B19-11
038206	B19-11
038207	B19-11
038208	B19-11
038209	B19-11
038210	B19-11
038211	B19-11
038212	B19-11
038213	B19-11
038214	B19-11
038215	B19-11
038216	B19-11
038217	B19-11
038218	B19-11
038219	B19-11
038220	B19-11
038221	B19-11
038222	B19-11
038223	B19-11
038224	B19-11
038225	B19-11
038226	B19-11
038227	B19-11
038228	B19-11
038229	B19-11
038910	B19-31, B19-32
038911	B19-31, B19-32
038912	B19-31, B19-32
038913	B19-31, B19-32
038914	B19-31, B19-32
038915	B19-31, B19-32
038916	B19-31, B19-32
038917	B19-31, B19-32
038918	B19-31, B19-32
038919	B19-31, B19-32
038920	B19-31, B19-32
038921	B19-31, B19-32
038922	B19-31, B19-32
038923	B19-31, B19-32
038924	B19-31, B19-32
038925	B19-31, B19-32
038926	B19-31, B19-32
038927	B19-31, B19-32
038928	B19-31, B19-32
038929	B19-31, B19-32
038930	B19-31, B19-32
038932	B19-31, B19-32
039002	B19-31, B19-32
039003	B19-31, B19-32
039004	B19-31, B19-32
039005	B19-31, B19-32
039006	B19-31, B19-32
039007	B19-31, B19-32
039008	B19-31, B19-32
039009	B19-31, B19-32
039010	B19-31, B19-32
039011	B19-31, B19-32
039012	B19-31, B19-32
039013	B19-31, B19-32
039014	B19-31, B19-32
039015	B19-31, B19-32
039016	B19-31, B19-32
039017	B19-31, B19-32
039018	B19-31, B19-32
039019	B19-31, B19-32
039043	B19-31, B19-32
039044	B19-31, B19-32
039073	B19-31, B19-32
039084	B19-31, B19-32
039097	B19-31, B19-32
039100	B15-48
039101	B15-48
039102	B15-48
039103	B15-48
039104	B15-48
039105	B15-48
039106	B15-48
039107	B15-48
039108	B15-48
039109	B15-49
039110	B15-49
039111	B15-49
039112	B15-49
039113	B15-48
039114	B15-48
039115	B15-48
039116	B15-48
039117	B15-48
039118	B15-48
039119	B15-49
039120	B15-49
039121	B15-49
039122	B15-49
039123	B15-49
039124	B15-49
039125	B15-49
039126	B15-49
039127	B15-49
039128	B15-49
039129	B15-49
039138	B15-33
039141	B15-33
039142	B15-33
039147	B15-33
039148	B15-33
039151	B15-33
039152	B15-33
039155	B15-33
039156	B15-33
039159	B15-33
039160	B15-33
039163	B15-33
039164	B15-34
039165	B15-34
039166	B15-34
039167	B15-34
039168	B15-34
039169	B15-34
039170	B15-34
039171	B15-34
039172	B15-34
039173	B15-34
039174	B15-34
039175	B15-101
039177	B15-101
039179	B15-101
039181	B15-101
039183	B15-101
039185	B15-101
039187	B15-101
039189	B15-101
039191	B15-101
039193	B15-101
039195	B15-101
039197	B15-101
039199	B15-101
039201	B15-101
039203	B15-101
039205	B15-101
039207	B15-101
039209	B15-101
039211	B15-101
039213	B15-101
039215	B15-101
039217	B15-33, B15-35
039218	B15-33, B15-35
039219	B15-33, B15-35
039220	B15-33, B15-35
039221	B15-33, B15-35
039222	B15-33, B15-35
039223	B15-33, B15-35
039224	B15-33, B15-34, B15-35
039225	B15-34, B15-35
039226	B15-34, B15-35
039227	B15-34, B15-35
039228	B15-34, B15-35
039289	B15-103, B15-106, B15-113, B15-119
039290	B15-119
039291	B15-103, B15-106, B15-113, B15-119
039292	B15-103, B15-106, B15-113, B15-119
039297	B15-103, B15-106, B15-115, B15-119
039355	B15-112
039356	B15-112
039357	B15-112
039358	B15-112
039359	B15-112
039360	B15-112
039361	B15-112
039362	B15-112
039371	B15-112
039372	B15-112
039373	B15-112
039374	B15-112
039375	B15-112
039376	B15-112
039377	B15-114
039378	B15-114
039380	B15-114
039381	B15-114
039382	B15-114
039383	B15-114
039384	B15-114
039385	B15-114
039386	B15-114

PART NUMBER INDEX

Part Number	Page
039404	B15-95
039405	B15-95
039406	B15-95
039407	B15-95
039413	B15-95
039414	B15-95
039415	B15-95
039416	B15-95
039417	B15-95
039419	B15-95
039420	B15-95
039421	B15-95
039422	B15-95
039423	B15-95
039424	B15-95
039425	B15-95
039426	B15-95
039427	B15-95
039508	B15-32, B15-35
039509	B15-32, B15-35
039515	B15-103, B15-106, B15-113, B15-119
039530	B15-27, B15-32, B15-41, B15-54, B15-95
039538	B15-27, B15-32, B15-41, B15-54, B15-95
039544	B15-32, B15-35
039545	B15-32, B15-35
039553	B15-95
039568	B15-103, B15-106, B15-113
039575	B15-32
039576	B15-32
039577	B15-32
039578	B15-32
039579	B15-26
039580	B15-32
039581	B15-32
039582	B15-32, B15-95
039583	B15-32, B15-95
039584	B15-32
039585	B15-32
039586	B15-32
039587	B15-32
039588	B15-32
039589	B15-32
039590	B15-32
039591	B15-32
039592	B15-32
039593	B15-32
039594	B15-32
039595	B15-32
039596	B15-32
039597	B15-33
039598	B15-33
039599	B15-33
039600	B15-33
039601	B15-33
039602	B15-33
039603	B15-33
039604	B15-33
039605	B15-33
039606	B15-28
039665	B15-32, B15-35
039666	B15-32, B15-35
039667	B15-32, B15-35
039668	B15-32, B15-35
039669	B15-26, B15-35, B15-48, B15-50, B15-52, B15-77
039670	B15-32, B15-35
039671	B15-32, B15-35
039672	B15-32, B15-35
039673	B15-32, B15-35
039674	B15-32, B15-35
039675	B15-32, B15-33, B15-35
039676	B15-32, B15-33, B15-35
039677	B15-33, B15-35
039678	B15-33, B15-35
039679	B15-33, B15-35
039680	B15-33, B15-35
039681	B15-28, B15-35
039682	B15-101
039684	B15-101
039686	B15-101
039688	B15-101
039690	B15-101
039692	B15-101
039694	B15-101
039696	B15-101
039698	B15-101
039700	B15-101
039702	B15-101
039704	B15-101
039706	B15-101
039708	B15-101
039710	B15-101
039711	B15-101
039712	B15-101
039713	B15-101
039714	B15-101
039715	B15-101
039716	B15-101
039717	B15-112
039719	B15-112
039721	B15-112
039723	B15-112
039725	B15-112
039727	B15-112
039729	B15-112
039731	B15-112
039733	B15-112
039735	B15-112
039737	B15-112
039739	B15-112
039741	B15-112
039743	B15-112
039745	B15-114
039747	B15-114
039749	B15-114
039750	B15-114
039751	B15-114
039752	B15-114
039753	B15-114
039754	B15-114
039755	B15-114
039760	B15-95
039762	B15-35, B15-95
039764	B15-95
039766	B15-95
039768	B15-95
039770	B15-95
039772	B15-95
039774	B15-95
039776	B15-95
039780	B15-95
039781	B15-95
039782	B15-95
039783	B15-95
039784	B15-95
039785	B15-95
039852	B15-27, B15-32, B15-41
039853	B15-27, B15-32, B15-41
039854	B15-27, B15-32, B15-41
039855	B15-27, B15-32, B15-41, B15-95
039856	B15-27, B15-32, B15-41
039857	B15-27, B15-32, B15-41, B15-103, B15-106, B15-113, B15-119
039858	B15-27, B15-32, B15-41
039859	B15-29, B15-32, B15-41, B15-54, B15-95
039860	B15-29, B15-33, B15-41
039861	B15-29, B15-33, B15-41, B15-54
039862	B15-29, B15-33, B15-41
039863	B15-29, B15-33, B15-41, B15-95, B15-103, B15-106, B15-115, B15-119
039864	B15-29, B15-33, B15-41, B15-54, B15-95
039865	B15-29, B15-33, B15-41
039866	B15-29, B15-33, B15-41, B15-54, B15-95
039867	B15-29, B15-33, B15-41
040001	B17-57
040002	B17-57
040003	B17-57
040004	B17-57
040005	B17-57
040006	B17-57
040007	B17-57
040008	B17-57
040009	B17-57
040010	B17-57
040011	B17-57
040012	B17-57
040013	B17-57
040014	B17-57
040015	B17-57
040016	B17-57
040017	B17-57
040018	B17-57
040019	B17-57
040020	B17-57
040021	B17-57
040022	B17-57
040023	B17-57
040024	B17-57
040025	B17-57
040026	B17-57
040027	B17-57
040028	B17-57
040029	B17-57
040030	B17-57
040031	B17-57
040032	B17-57
040033	B17-57
040034	B17-57
040681	B15-29, B15-41, B15-69, B15-95, B15-103, B15-106, B15-115, B15-119
040682	B15-29, B15-41, B15-69, B15-103, B15-106, B15-115, B15-119
040683	B15-29, B15-41, B15-69, B15-95, B15-103, B15-106
040684	B15-29, B15-41, B15-69, B15-103, B15-106
040685	B15-29, B15-31, B15-41, B15-69
040687	B15-106
040689	B15-31
040690	B15-29, B15-33, B15-41, B15-69

PART NUMBER INDEX

Part Number	Page
040691	B15-41, B15-69, B15-103, B15-115
040700	B15-27, B15-41, B15-48, B15-50, B15-113, B15-119
040701	B15-27, B15-41, B15-48, B15-50, B15-95, B15-113, B15-119
040702	B15-27, B15-41, B15-48, B15-50, B15-69, B15-95, B15-113, B15-119
040703	B15-27, B15-41, B15-48, B15-50, B15-69, B15-95, B15-113, B15-119
040704	B15-27, B15-41, B15-48, B15-50, B15-69, B15-95
040705	B15-27, B15-41, B15-48, B15-50, B15-69, B15-95, B15-103, B15-106, B15-113, B15-119
040706	B15-27, B15-41, B15-48, B15-49, B15-50, B15-51, B15-69, B15-95, B15-103, B15-106, B15-113, B15-119
040707	B15-27, B15-41, B15-49, B15-51, B15-69
040708	B15-29, B15-41, B15-49, B15-51, B15-69, B15-95
040709	B15-29, B15-41, B15-49, B15-51, B15-69, B15-103, B15-106, B15-115, B15-119
040710	B15-29, B15-41, B15-49, B15-51, B15-69, B15-95, B15-103, B15-106, B15-115, B15-119
040711	B15-29, B15-41, B15-49, B15-51, B15-69, B15-95, B15-103, B15-106, B15-115, B15-119
040712	B15-29, B15-41, B15-49, B15-51, B15-69, B15-95, B15-103, B15-106, B15-115, B15-119
040713	B15-29, B15-41, B15-69, B15-95, B15-103, B15-106, B15-115, B15-119
040714	B15-29, B15-41, B15-69, B15-95
040830	B15-85, B15-93
040838	B15-101, B15-111
040850	B15-125
040890	B15-27, B15-32, B15-41, B15-69
040891	B15-27, B15-32, B15-41, B15-69
040892	B15-27, B15-32, B15-41, B15-69
040893	B15-29, B15-33, B15-41, B15-69
040894	B15-29, B15-33, B15-41, B15-69
040895	B15-29, B15-33, B15-41, B15-69
040896	B15-29, B15-33, B15-41, B15-69
040897	B15-31, B15-34, B15-41, B15-69
040898	B15-31, B15-34, B15-41, B15-69
040899	B15-41, B15-69, B15-84, B15-91
040900	B15-31, B15-34, B15-41, B15-69, B15-84, B15-91
040901	B15-31, B15-34, B15-41, B15-69, B15-84, B15-91
040918	B15-27, B15-32, B15-41, B15-69
040919	B15-29, B15-33, B15-41, B15-69
040995	B15-31, B15-34, B15-41, B15-69, B15-84, B15-91
041064	B15-101, B15-111, B15-114, B15-124
041065	B15-101, B15-111, B15-114, B15-124
041066	B15-101, B15-111, B15-114, B15-124
041067	B15-101, B15-111, B15-114, B15-124
041068	B15-101, B15-111, B15-114, B15-124
041069	B15-101, B15-111
041070	B15-101, B15-111
041071	B15-101, B15-111, B15-114, B15-124
041072	B15-101, B15-111, B15-114, B15-124
041082	B15-31, B15-34, B15-41, B15-69
041161	B15-45, B15-125
041172	B15-45, B15-125
041173	B15-45, B15-125
041174	B15-45, B15-125
041175	B15-45, B15-125
041176	B15-45, B15-125
041177	B15-45, B15-125
041178	B15-45, B15-125
041179	B15-45, B15-125
041180	B15-45, B15-125
041181	B15-45, B15-125
041182	B15-45, B15-125
041183	B15-45, B15-125
041184	B15-45, B15-125
041185	B15-45, B15-125
041186	B15-45, B15-125
041213	B15-45, B15-125
041628	B15-30
041646	B15-29, B15-33, B15-41, B15-69
041685	B15-41
041686	B15-41
041687	B15-27, B15-32, B15-41, B15-69
041688	B15-27, B15-32, B15-41, B15-69
041860	B15-26
041861	B15-26
041862	B15-26
041863	B15-26
041864	B15-26
041865	B15-26
041866	B15-26
041867	B15-26
041868	B15-28
041869	B15-28
041870	B15-28
041871	B15-28
041872	B15-28
041873	B15-28
041874	B15-28
041875	B15-28
041876	B15-28
041877	B15-28
041878	B15-28
041879	B15-28
041880	B15-28
041881	B15-28
041882	B15-28
041883	B15-28
041884	B15-28
041885	B15-28
041886	B15-28
041887	B15-30
041987	B15-45, B15-125
042001	B15-64
042002	B15-64
042003	B15-64
042004	B15-64
042005	B15-64
042006	B15-64
042007	B15-64
042008	B15-64
042009	B15-64
042010	B15-64
042011	B15-64
042015	B15-65
042016	B15-65
042017	B15-65
042019	B15-65
042020	B15-65
042021	B15-65
042022	B15-65
042023	B15-65
042024	B15-65
042025	B15-65
042028	B15-103, B15-106
042029	B15-103, B15-106
042030	B15-65
042031	B15-103, B15-106, B15-115, B15-119
042032	B15-103, B15-106, B15-115, B15-119
042036	B15-31, B15-34, B15-41, B15-69, B15-84, B15-91
042037	B15-84, B15-91
042038	B15-84, B15-91
042039	B15-84, B15-91
042040	B15-84, B15-91
042049	B15-103, B15-106, B15-115, B15-119
042085	B15-103, B15-106, B15-115, B15-119
042088	B15-103, B15-106, B15-113, B15-119
042089	B15-103, B15-106, B15-113, B15-119
042090	B15-85, B15-91
042091	B15-85, B15-91
042092	B15-85, B15-91
042093	B15-85, B15-91
042094	B15-85, B15-91
042095	B15-85, B15-91
042098	B15-103, B15-106, B15-115, B15-119
042100	B15-67
042103	B15-67
042106	B15-67
042109	B15-67
042111	B15-67
042114	B15-67
042116	B15-67
042119	B15-67
042121	B15-67
042124	B15-67
042126	B15-67
042129	B15-67
042131	B15-67
042134	B15-67

PART NUMBER INDEX

Part Number	Page
042137	B15-67
042140	B15-67
042143	B15-67
042146	B15-67
042149	B15-67
042152	B15-67
042155	B15-67
042158	B15-67
042161	B15-67
042164	B15-67
042167	B15-67
042193	B15-27, B15-32, B15-41, B15-50, B15-52, B15-113, B15-119
042199	B15-27, B15-32, B15-41, B15-50, B15-52, B15-95, B15-113, B15-119
042220	B15-103, B15-106
042221	B15-103, B15-106
042248	B15-103, B15-106, B15-115, B15-119
042249	B15-103, B15-106, B15-115, B15-119
042270	B15-65
042271	B15-65
042272	B15-65
042273	B15-65
042274	B15-65
042282	B15-65
042283	B15-65
042284	B15-65
042303	B15-65
042304	B15-65
042305	B15-65
042306	B15-65
042307	B15-65
042308	B15-65
042309	B15-65
042315	B15-45, B15-125
042316	B15-45, B15-52, B15-125
042335	B15-45, B15-125
042368	B15-31, B15-41, B15-69
042369	B15-31, B15-41, B15-69
042370	B15-65
042371	B15-65
042372	B15-65
042373	B15-65
042374	B15-65
042375	B15-65
042376	B15-65
042377	B15-65
042378	B15-65
042379	B15-65
042380	B15-27, B15-32, B15-41, B15-54, B15-69
042381	B15-27, B15-32, B15-41, B15-69
042382	B15-27, B15-32, B15-41, B15-54, B15-69
042383	B15-29, B15-32, B15-41, B15-54, B15-69
042384	B15-29, B15-33, B15-41, B15-54, B15-69
042385	B15-29, B15-33, B15-41, B15-54, B15-69
042386	B15-29, B15-33, B15-41, B15-69
042387	B15-29, B15-33, B15-41, B15-54, B15-69
042388	B15-29, B15-41, B15-69
042389	B15-29, B15-33, B15-41, B15-54, B15-69
042390	B15-29, B15-33, B15-41, B15-69
042391	B15-29, B15-33, B15-41, B15-69
042392	B15-29, B15-33, B15-41, B15-54, B15-69
042393	B15-29, B15-33, B15-41, B15-69
042394	B15-31, B15-34, B15-41, B15-69
042395	B15-31, B15-34, B15-41, B15-69
042396	B15-31, B15-34, B15-41, B15-69, B15-84, B15-91
042397	B15-41, B15-69
042400	B15-61
042401	B15-61
042402	B15-61
042403	B15-61
042404	B15-61
042405	B15-61
042406	B15-26
042407	B15-61
042408	B15-61
042409	B15-26
042410	B15-61
042411	B15-61
042412	B15-61
042413	B15-61
042414	B15-61
042415	B15-61
042416	B15-61
042417	B15-61
042420	B15-61
042421	B15-61
042422	B15-26
042423	B15-26
042424	B15-61
042425	B15-61
042428	B15-61
042430	B15-61
042431	B15-28
042432	B15-61
042433	B15-61
042436	B15-61
042438	B15-28
042439	B15-61
042440	B15-61
042443	B15-61
042445	B15-28
042446	B15-61
042447	B15-30
042448	B15-30
042449	B15-30
042450	B15-61
042453	B15-30
042454	B15-30
042455	B15-61
042458	B15-30
042460	B15-61
042463	B15-30
042464	B15-30
042465	B15-61
042468	B15-61
042469	B15-61
042472	B15-61
042477	B15-61
042510	B15-31, B15-34, B15-41, B15-69, B15-84, B15-91
042511	B15-31, B15-34, B15-41, B15-69
042512	B15-27, B15-32, B15-41, B15-50, B15-52, B15-69, B15-95, B15-113, B15-119
042513	B15-27, B15-32, B15-41, B15-50, B15-52, B15-69, B15-95
042514	B15-27, B15-32, B15-41, B15-50, B15-52, B15-54, B15-69, B15-95
042515	B15-27, B15-32, B15-41, B15-50, B15-69
042516	B15-27, B15-32, B15-41, B15-50, B15-52, B15-69, B15-95
042517	B15-27, B15-32, B15-41, B15-50, B15-69
042518	B15-27, B15-32, B15-41, B15-50, B15-52, B15-54, B15-69, B15-95
042519	B15-27, B15-32, B15-41, B15-51, B15-69, B15-103, B15-106, B15-113, B15-119
042520	B15-27, B15-32, B15-41, B15-51, B15-52, B15-69
042521	B15-29, B15-32, B15-41, B15-51, B15-52, B15-54, B15-69, B15-95
042522	B15-29, B15-33, B15-41, B15-51, B15-69
042523	B15-29, B15-33, B15-41, B15-51, B15-52, B15-54, B15-69
042524	B15-29, B15-33, B15-41, B15-51, B15-69
042525	B15-29, B15-33, B15-41, B15-51, B15-69, B15-95, B15-103, B15-106, B15-115, B15-119
042526	B15-29, B15-33, B15-41, B15-51, B15-54, B15-69, B15-95
042527	B15-29, B15-33, B15-41, B15-51, B15-69, B15-103, B15-106, B15-115, B15-119
042528	B15-29, B15-33, B15-41, B15-51, B15-54, B15-69, B15-95, B15-103, B15-106, B15-115, B15-119
042529	B15-29, B15-33, B15-41, B15-51, B15-69
042530	B15-29, B15-33, B15-41, B15-69, B15-95

PART NUMBER INDEX

Part Number	Page
042531	B15-29, B15-33, B15-41, B15-69, B15-95
042532	B15-29, B15-33, B15-41, B15-69
042533	B15-29, B15-33, B15-41, B15-54, B15-69, B15-95
042534	B15-29, B15-33, B15-41, B15-69, B15-95
042535	B15-29, B15-33, B15-41, B15-69, B15-103, B15-106, B15-115, B15-119
042536	B15-29, B15-33, B15-41, B15-69
042537	B15-29, B15-33, B15-41, B15-54, B15-69, B15-95
042538	B15-29, B15-33, B15-41, B15-69, B15-95, B15-103, B15-106, B15-115, B15-119
042539	B15-29, B15-33, B15-41, B15-69
042540	B15-29, B15-33, B15-41, B15-69
042541	B15-31, B15-34, B15-41, B15-69
042542	B15-31, B15-34, B15-41, B15-69
042543	B15-31, B15-34, B15-41, B15-69
042544	B15-31, B15-34, B15-41, B15-69, B15-84, B15-91
042545	B15-31, B15-34, B15-41, B15-69, B15-84, B15-91
042547	B15-113
042562	B15-33
042568	B15-61
042569	B15-61
042570	B15-61
042571	B15-61
042572	B15-61
042573	B15-61
042574	B15-61
042575	B15-61
042576	B15-61
042577	B15-61
042578	B15-61
042579	B15-61
042580	B15-61
042581	B15-61
042594	B15-34, B15-69
042627	B10-61
042628	B10-61, B10-67
042629	B10-61
042630	B10-61, B10-67
042631	B10-61
042632	B10-61
042633	B10-61
042634	B10-61, B10-67
043015	B15-26
043048	B15-26
043109	B15-29, B15-33, B15-41, B15-69
043248	B15-26
043249	B15-26
043386	B15-29, B15-33, B15-41, B15-69
043393	B15-77, B15-81
043400	B15-77, B15-81
043401	B15-77
043402	B15-77, B15-81
043403	B15-77, B15-81
043404	B15-77, B15-81
043405	B15-77, B15-81
043406	B15-77, B15-81
043407	B15-77, B15-81
043408	B15-77, B15-81
043410	B15-77, B15-81
043411	B15-77, B15-81
043412	B15-77, B15-81
043421	B15-77
043501	B15-77, B15-80
043502	B15-77, B15-80
043504	B15-77, B15-80
043506	B15-77, B15-80
043508	B15-77, B15-80
043509	B15-77, B15-80
043511	B15-77, B15-80
043512	B15-77, B15-80
043513	B15-77, B15-80
043514	B15-77, B15-80
043516	B15-77, B15-80
043519	B15-77, B15-80
043520	B15-77, B15-80
043521	B15-77, B15-80
043522	B15-80
043538	B15-31, B15-34, B15-41, B15-69, B15-84, B15-91
043540	B15-27, B15-32, B15-41, B15-48, B15-69, B15-95, B15-113, B15-119
043541	B15-27, B15-32, B15-41, B15-48, B15-69, B15-95
043542	B15-27, B15-32, B15-41, B15-48, B15-54, B15-69, B15-95
043543	B15-27, B15-32, B15-41, B15-48, B15-69
043544	B15-27, B15-32, B15-41, B15-48, B15-69, B15-95
043545	B15-27, B15-32, B15-41, B15-48, B15-69
043546	B15-27, B15-32, B15-41, B15-48, B15-54, B15-69, B15-95
043547	B15-27, B15-32, B15-41, B15-49, B15-69, B15-103, B15-106, B15-119
043548	B15-27, B15-32, B15-41, B15-49, B15-69
043549	B15-29, B15-32, B15-41, B15-49, B15-54, B15-69, B15-95
043550	B15-29, B15-33, B15-41, B15-49, B15-69
043551	B15-29, B15-33, B15-41, B15-49, B15-54, B15-69
043552	B15-29, B15-33, B15-41, B15-49, B15-69
043553	B15-29, B15-33, B15-41, B15-49, B15-69, B15-95, B15-103, B15-106, B15-115, B15-119
043554	B15-29, B15-33, B15-41, B15-49, B15-54, B15-69, B15-95
043555	B15-29, B15-33, B15-41, B15-49, B15-69, B15-103, B15-106, B15-115, B15-119
043556	B15-29, B15-33, B15-41, B15-49, B15-54, B15-69, B15-95, B15-103, B15-106, B15-115, B15-119
043557	B15-29, B15-33, B15-41, B15-49, B15-69
043558	B15-29, B15-33, B15-41, B15-69, B15-95
043559	B15-29, B15-33, B15-41, B15-69, B15-95
043560	B15-29, B15-33, B15-41, B15-54, B15-69, B15-95
043561	B15-29, B15-33, B15-41, B15-69, B15-95
043562	B15-29, B15-41, B15-69, B15-103, B15-106, B15-115, B15-119
043563	B15-29, B15-33, B15-41, B15-69
043564	B15-29, B15-33, B15-41, B15-54, B15-69, B15-95
043565	B15-29, B15-33, B15-41, B15-69, B15-95, B15-103, B15-106, B15-115, B15-119
043566	B15-29, B15-33, B15-41, B15-69
043567	B15-29, B15-33, B15-41, B15-69
043568	B15-31, B15-34, B15-41, B15-69
043569	B15-31, B15-34, B15-41, B15-69
043570	B15-31, B15-34, B15-41, B15-69
043571	B15-31, B15-34, B15-41, B15-69, B15-84, B15-91
043572	B15-31, B15-34, B15-41, B15-69, B15-84, B15-91
043573	B15-31, B15-34, B15-41, B15-69
043574	B15-29, B15-33, B15-41, B15-69
043575	B15-31, B15-34, B15-41, B15-69
043578	B15-27, B15-32, B15-41, B15-48, B15-113, B15-119
043579	B15-27, B15-32, B15-41, B15-48, B15-95, B15-113, B15-119
043580	B15-31, B15-44, B15-71
043581	B15-84, B15-93
043582	B15-84, B15-93
043583	B15-84, B15-93
043584	B15-84, B15-93
043585	B15-31, B15-44, B15-71
043586	B15-31, B15-44, B15-71

PART NUMBER INDEX

Part Number	Page
043618	B15-29, B15-33, B15-44, B15-71
043619	B15-29, B15-33, B15-44, B15-71
043620	B15-29, B15-33, B15-44, B15-54, B15-71
043621	B15-29, B15-33, B15-44, B15-71
043622	B15-29, B15-33, B15-44, B15-71
043623	B15-29, B15-33, B15-44, B15-71
043624	B15-29, B15-33, B15-44, B15-54, B15-71
043625	B15-29, B15-33, B15-44, B15-71
043626	B15-29, B15-33, B15-44, B15-71
043627	B15-29, B15-33, B15-44, B15-71
043628	B15-31, B15-44, B15-71
043629	B15-31, B15-44, B15-71
043630	B15-31, B15-44, B15-71
043631	B15-31, B15-44, B15-71
043632	B15-31, B15-44, B15-71
043633	B15-31, B15-44, B15-71
043634	B15-29, B15-33, B15-44, B15-71
043635	B15-85, B15-93
043636	B15-85, B15-93
043637	B15-85, B15-93
043638	B15-85, B15-93
043639	B15-85, B15-93
043640	B15-85, B15-93
043958	B15-77
043959	B15-77
043960	B15-77
043961	B15-77
043962	B15-77
043963	B15-77
043964	B15-77
043965	B15-77
043966	B15-77
043967	B15-77
043968	B15-77
043969	B15-77
043970	B15-77
043971	B15-77
043972	B15-77
043974	B15-77
043976	B15-77
043977	B15-77
043978	B15-77
043995	B15-26, B15-35, B15-48, B15-50, B15-52
043996	B15-26, B15-35, B15-48, B15-50, B15-52
043997	B15-26, B15-35, B15-48, B15-50, B15-52
043998	B15-26, B15-48, B15-50, B15-52, B15-77
044000	B15-26, B15-35, B15-48, B15-50, B15-52, B15-77
044003	B15-26, B15-35, B15-48, B15-50, B15-52, B15-77
044007	B15-26, B15-35, B15-48, B15-50, B15-52, B15-77
044010	B15-26, B15-35, B15-48, B15-50, B15-51, B15-52, B15-77
044013	B15-26, B15-35, B15-48, B15-49, B15-50, B15-51, B15-52
044015	B15-26
044020	B15-28, B15-35, B15-49, B15-51, B15-52, B15-77
044023	B15-28, B15-35, B15-49, B15-51, B15-52, B15-77
044025	B15-28, B15-35, B15-49, B15-51, B15-52, B15-77
044031	B15-28, B15-35, B15-49, B15-51, B15-77
044034	B15-28, B15-35, B15-49, B15-51, B15-77
044040	B15-28, B15-35, B15-77
044043	B15-28, B15-35, B15-77
044046	B15-28, B15-35
044049	B15-28, B15-35
044054	B15-28, B15-35
044055	B15-28, B15-30, B15-35
044114	B15-26, B15-35, B15-49, B15-51, B15-52, B15-77
044115	B15-26
044164	B15-85
044165	B15-85
044166	B15-85
044198	B15-26, B15-35, B15-48, B15-50, B15-52, B15-77
044199	B15-26, B15-35, B15-49, B15-51, B15-52, B15-77
044200	B15-30, B15-35
044201	B15-30, B15-35
044202	B15-28, B15-35, B15-49, B15-51, B15-77
044203	B15-28, B15-35
044231	B15-61
044232	B15-61
044233	B15-61
044234	B15-61
044235	B15-61
044236	B15-61
044360	B15-29, B15-33, B15-41, B15-69
044440	B15-84, B15-91
045338	B2-42
045412	B2-42
045431	B15-84, B15-93
045434	B15-85, B15-93
045464	B15-84, B15-93
045600	B2-42
045601	B2-42
045602	B2-42
045603	B2-42
045604	B2-42
045605	B2-42
045606	B2-42
045677	B2-42
045778	B15-84, B15-91
045781	B15-84, B15-91
045784	B15-84, B15-91
045787	B15-84, B15-91
045790	B15-84, B15-91
045793	B15-85, B15-91
045796	B15-85, B15-91
045799	B15-85, B15-91
045802	B15-85, B15-91
045805	B15-85, B15-91
045808	B15-85, B15-91
045874	B4-90, B4-94
045927	B15-103, B15-106, B15-113, B15-119
045928	B15-103, B15-106, B15-113, B15-119
045931	B15-103, B15-106, B15-113, B15-119
045934	B15-103, B15-106
045936	B15-103, B15-106
045939	B15-103, B15-106, B15-115, B15-119
045943	B15-103, B15-106, B15-115, B15-119
045949	B15-103, B15-106, B15-115, B15-119
045951	B15-103, B15-106, B15-115, B15-119
045953	B15-103, B15-106, B15-115, B15-119
045955	B15-103, B15-106
045956	B15-103, B15-106
046110	B15-77
046166	B15-113, B15-119
046167	B15-113, B15-119
046168	B15-113, B15-119
046175	B15-113, B15-119
046176	B15-113, B15-119
046177	B15-113, B15-119
046219	B16-34, B16-35
046221	B16-34, B16-35
046222	B16-34, B16-35
046223	B16-34, B16-35
046224	B16-34, B16-35
046225	B16-34, B16-35
046226	B16-34, B16-35
046227	B16-34, B16-35
046228	B16-34
046229	B16-34
046230	B16-34
046231	B16-34
046232	B16-34
046233	B16-45, B16-49
046234	B16-45, B16-49
046235	B16-45, B16-49
046236	B16-45, B16-49
046237	B16-45, B16-49
046238	B16-37
046239	B16-37
046285	B16-31, B16-37
046286	B16-31, B16-37
046287	B16-31, B16-37
046288	B16-31, B16-37
046289	B16-31, B16-37
046290	B16-31, B16-37
046291	B16-31, B16-37
046292	B16-31
046293	B16-31, B16-37
046294	B16-31
046295	B16-31
046296	B16-31
046297	B16-31
046298	B16-31
046299	B16-31
046304	B16-31, B16-37
046305	B16-31, B16-37
046306	B16-31, B16-37
046307	B16-31, B16-37
046308	B16-31, B16-37
046309	B16-31, B16-37
046310	B16-31, B16-37
046311	B16-31
046312	B16-31, B16-37
046313	B16-31

PART NUMBER INDEX

Part Number	Page
046314	B16-31
046315	B16-31
046316	B16-31
046317	B16-31
046318	B16-31
046323	B15-67
046324	B15-67
046325	B15-67
046326	B15-67
046331	B16-34, B16-35
046332	B16-34, B16-35
046333	B16-34, B16-35
046350	B15-27, B15-32, B15-44, B15-48, B15-50, B15-52
046351	B15-27, B15-32, B15-44, B15-48, B15-50, B15-52
046352	B15-27, B15-32, B15-44, B15-48, B15-50, B15-52, B15-71
046353	B15-27, B15-32, B15-44, B15-48, B15-50, B15-52, B15-71
046354	B15-27, B15-32, B15-44, B15-48, B15-50, B15-52, B15-54, B15-71
046355	B15-27, B15-32, B15-44, B15-48, B15-50, B15-71
046356	B15-27, B15-32, B15-44, B15-48, B15-50, B15-52, B15-71
046357	B15-27, B15-32, B15-44, B15-48, B15-50, B15-71
046358	B15-27, B15-32, B15-44, B15-48, B15-50, B15-52, B15-54, B15-71
046359	B15-27, B15-32, B15-44, B15-49, B15-51, B15-71
046360	B15-27, B15-32, B15-44, B15-49, B15-51, B15-52, B15-71
046361	B15-29, B15-32, B15-44, B15-49, B15-51, B15-52, B15-54, B15-71
046362	B15-29, B15-33, B15-44, B15-49, B15-51, B15-71
046363	B15-29, B15-33, B15-44, B15-49, B15-51, B15-52, B15-54, B15-71
046364	B15-29, B15-33, B15-44, B15-49, B15-51, B15-71
046400	B15-103, B15-106, B15-113, B15-119
046401	B15-103, B15-106, B15-113, B15-119
046402	B15-103, B15-106, B15-113, B15-119
046403	B15-103, B15-106, B15-113, B15-119
046404	B15-103, B15-106, B15-113, B15-119
046405	B15-103, B15-106
046406	B15-103, B15-106
046407	B15-103, B15-106, B15-115, B15-119
046408	B15-103, B15-106, B15-115, B15-119
046409	B15-103, B15-106, B15-115, B15-119
046410	B15-103, B15-106, B15-115, B15-119
046411	B15-103, B15-106, B15-115, B15-119
046412	B15-103, B15-106, B15-115, B15-119
046413	B15-103, B15-106, B15-115, B15-119
046414	B15-103, B15-106, B15-115, B15-119
046415	B15-103, B15-106, B15-115, B15-119
046416	B15-103, B15-106, B15-115, B15-119
046417	B15-103, B15-106
046418	B15-103, B15-106
046419	B15-103, B15-106, B15-115, B15-119
046420	B15-103, B15-106, B15-115, B15-119
046421	B15-29, B15-33, B15-41, B15-69
046422	B15-103, B15-106
046423	B15-103, B15-106
046424	B15-103, B15-106
046425	B15-103, B15-106
046430	B15-29, B15-33, B15-44, B15-49, B15-51, B15-71
046431	B15-29, B15-33, B15-44, B15-49, B15-51, B15-54, B15-71
046432	B15-29, B15-33, B15-44, B15-49, B15-51, B15-71
046433	B15-29, B15-33, B15-44, B15-49, B15-51, B15-54, B15-71
046434	B15-29, B15-33, B15-44, B15-49, B15-51, B15-71
046463	B15-113, B15-119
046464	B15-113, B15-119
046465	B15-113, B15-119
046466	B15-113, B15-119
046467	B15-113, B15-119
046468	B15-113, B15-119
046469	B15-113, B15-119
046470	B15-113, B15-119
046471	B15-113, B15-119
046472	B15-113, B15-119
046473	B15-113, B15-119
046474	B15-113, B15-119
046475	B15-113, B15-119
046476	B15-113, B15-119
046477	B15-113, B15-119
046478	B15-113, B15-119
046487	B16-31, B16-37
046488	B16-31, B16-37
046489	B16-31, B16-37
046490	B16-31
046492	B16-37
046496	B16-37
046498	B15-85, B15-91
046499	B15-85, B15-91
046545	B15-29, B15-33, B15-44, B15-71
046550	B15-99
046551	B15-95, B15-99
046552	B15-95, B15-99
046553	B15-95, B15-99
046554	B15-95, B15-99
046555	B15-95, B15-99
046556	B15-99
046557	B15-91, B15-95, B15-99
046558	B15-95, B15-99
046559	B15-95, B15-99
046560	B15-95, B15-99
046561	B15-95, B15-99
046562	B15-95, B15-99
046563	B15-95, B15-99
046564	B15-95, B15-99
046565	B15-95, B15-99
046566	B15-85, B15-91
046567	B15-85, B15-91
046568	B15-85, B15-91
046569	B15-85, B15-91
046570	B15-85, B15-91
046572	B15-85, B15-91
046632	B15-45, B15-125
046634	B15-45, B15-125
046635	B15-45, B15-125
046637	B15-45, B15-125
046638	B15-45, B15-125
046639	B15-45, B15-125
046642	B15-45, B15-125
046643	B15-45, B15-125
046680	B15-95, B15-99
046682	B15-95, B15-99
046710	B16-39
046711	B16-39
046712	B16-39
046713	B16-39
046714	B16-39
046715	B16-39
046717	B16-39
046718	B16-39
046719	B16-35, B16-39
046720	B16-35, B16-39
046721	B16-35
046722	B16-35
046723	B16-35
046751	B15-123
046752	B15-123
046753	B15-123
046754	B15-123
046755	B15-123
046756	B15-109, B15-123
046757	B15-109, B15-123
046758	B15-109, B15-123
046759	B15-109
046760	B15-109, B15-123
046761	B15-109, B15-123
046762	B15-109, B15-123
046763	B15-109, B15-123
046764	B15-109, B15-123
046765	B15-109, B15-123
046766	B15-109, B15-123
046767	B15-109, B15-123
046768	B15-109
046769	B15-109, B15-123
046770	B15-109
046771	B15-109
046772	B15-123
046773	B15-123
046850	B15-47
046851	B15-47
046872	B15-47
046873	B15-47
046874	B15-47
046875	B15-47
046876	B15-47
046877	B15-47
046878	B15-47
046879	B15-47
046880	B15-47
046881	B15-47
046882	B15-47
046883	B15-47
046884	B15-47

PART NUMBER INDEX

Part Number	Page
046885	B15-47
046886	B15-47
046887	B15-47
046891	B15-47
046892	B15-47
046893	B15-47
046894	B15-47
046960	B15-47
046961	B15-47
046962	B15-47
046963	B15-47
046964	B15-47
046965	B15-47
046966	B15-47
046967	B15-47
046968	B15-47
046969	B15-47
046970	B15-47
046971	B15-47
046972	B15-47
046973	B15-47
046974	B15-47
046975	B15-47
046976	B15-47
046977	B15-47
046978	B15-47
046979	B15-47
046980	B15-47
046981	B15-47
046982	B15-47
046983	B15-47
046984	B15-47
046985	B15-47
046986	B15-47
046987	B15-47
046988	B15-47
046989	B15-47
046991	B15-47
046992	B15-47
046993	B15-47
047628	B15-84, B15-93
047629	B15-84, B15-93
047630	B15-84, B15-93
047631	B15-84, B15-93
047632	B15-85, B15-93
047635	B15-85, B15-93
047636	B15-85, B15-93
047637	B15-84, B15-93
047638	B15-84, B15-93
047639	B15-84, B15-93
047641	B15-85, B15-93
047642	B15-85, B15-93
047643	B15-85, B15-93
047644	B15-85, B15-93
047645	B15-85, B15-93
047646	B15-84, B15-93
047647	B15-84, B15-93
047648	B15-84, B15-93
047649	B15-84, B15-93
047678	B15-84, B15-93
047679	B15-84, B15-93
047680	B15-84, B15-93
047681	B15-85, B15-93
047682	B15-85, B15-93
047815	B15-47
047816	B15-47
047817	B15-47
047818	B15-47
047819	B15-47
047820	B15-47
047821	B15-47
047822	B15-47
047823	B15-47
047824	B15-47
047825	B15-47
047826	B15-47
047827	B15-47
047828	B15-47
047829	B15-47
047830	B15-47
047831	B15-47
047940	B15-31, B15-34, B15-41, B15-69, B15-84, B15-91
047941	B15-31, B15-34, B15-41, B15-69, B15-84, B15-91
047942	B15-84, B15-91
047943	B15-84, B15-91
047944	B15-84, B15-91
047945	B15-84, B15-91
047946	B15-84, B15-91
047947	B15-85, B15-91
047948	B15-85, B15-91
047949	B15-85, B15-91
047950	B15-85, B15-91
047951	B15-85, B15-91
047952	B15-85, B15-91
047953	B15-85, B15-91
047954	B15-85, B15-91
047955	B15-85, B15-91
047956	B15-85, B15-91
047957	B15-85, B15-91
048000	B13-13
048001	B13-13
048002	B13-13
048003	B13-13
048004	B13-13
048005	B13-13
048006	B13-13
048007	B13-13
048008	B13-13
048009	B13-13
048010	B13-13
048011	B13-13
048012	B13-13
048013	B13-13
048014	B13-13
048015	B13-13
048016	B13-13
048017	B13-13
048018	B13-13
048019	B13-13
048020	B13-13
048021	B13-13
048022	B13-13
048023	B13-13
048024	B13-13
048025	B13-13
048026	B13-13
048027	B13-13
048028	B13-13
048029	B13-13
048030	B13-13
048031	B13-13
048032	B13-13
048033	B13-13
048034	B13-15
048035	B13-15
048036	B13-15
048037	B13-15
048038	B13-15
048039	B13-15
048040	B13-15
048041	B13-15
048042	B13-15
048043	B13-15
048044	B13-15
048045	B13-15
048046	B13-15
048047	B13-15
048048	B13-15
048049	B13-15
048050	B13-15
048051	B13-15
048052	B13-15
048053	B13-15
048054	B13-15
048055	B13-15
048056	B13-15
048057	B13-15
048058	B13-15
048059	B13-15
048060	B13-15
048061	B13-15
048062	B13-15
048063	B13-15
048064	B13-15
048065	B13-15
048066	B13-15
048067	B13-15
048109	B13-19
048110	B13-19
048111	B13-19
048113	B13-19
048114	B13-19
048115	B13-19
048116	B13-19
048124	B13-19
048125	B13-19
048126	B13-19
048128	B13-19
048129	B13-19
048130	B13-19
048131	B13-19
048202	B13-20
048203	B13-20
048204	B13-20
048205	B13-20
048206	B13-20
048207	B13-20
048208	B13-20
048210	B13-20
048216	B13-20
048217	B13-20
048218	B13-20
048219	B13-20
048220	B13-20
048221	B13-20
048222	B13-20
048224	B13-20
048385	B14-103
048386	B14-103
048389	B14-103
048390	B14-103
048925	B14-105, B16-21
048926	B14-105
048927	B14-105, B16-21
048928	B14-105
048929	B14-105, B16-21
048930	B14-105, B16-21
048931	B14-105, B16-21
048932	B14-105, B16-21
048933	B14-105, B16-21
048934	B14-105, B16-21
048937	B16-21
048938	B16-21
048939	B16-21
048940	B16-21
049235	B10-67
049380	B2-56
049385	B7-34
049415	B6-50
049430	B6-53
049437	B4-36
049447	B6-31
049462	B4-99
049466	B6-31
049467	B6-42
049468	B8-14
049469	B2-28
049470	B7-30
049477	B2-36
049490	B16-37
049496	B6-46
049610	B6-38
049615	B4-50
049686	B2-31
049690	B4-16
049696	B6-48

PART NUMBER INDEX

Part Number	Page
049709	B6-32
049742	B4-38
049747	B6-46
049751	B9-18
049781	B6-52
049784	B8-10
049787	B7-22
049802	B7-22
049803	B7-22
049811	B4-101
049813	B6-51
049816	B4-28
049818	B4-28
049829	B4-74
049835	B2-56
049838	B6-38
049841	B7-14
049843	B7-14
049844	B7-14
049845	B7-34
049848	B7-14
049852	B4-12
049855	B6-51
049859	B4-32
049879	B7-24
049884	B7-30
049887	B8-8
049891	B4-101
049892	B8-14
049893	B4-101
049894	B4-100
049918	B4-94
049925	B4-92
049926	B4-40
049930	B6-32
049944	B4-30
049945	B4-94
049950	B7-30
049991	B4-100
049996	B2-26
050119	B4-34
050130	B4-58
050132	B4-62
050146	B4-44
050189	B4-99
050386	B4-32
050420	B9-22
050474	B15-85, B15-91
050498	B4-44
050524	B2-42
050531	B15-85, B15-93
050555	B4-101
050580	B2-42
050653	B2-42
050654	B2-42
050656	B2-42
050662	B4-59, B4-62
050778	B8-14
050792	B4-16
050828	B8-12
050829	B8-12
050830	B8-12
050831	B8-12
050833	B8-12
050834	B4-54
050835	B4-54
050836	B8-16
050837	B4-12
050838	B8-10
050839	B7-24
050840	B8-14
050842	B8-14
050843	B4-56
050844	B8-16
050845	B8-8
050846	B4-74
050848	B8-12
050867	B4-56
050895	B4-52
050951	B7-24
051513	B4-99
051606	B7-34
051699	B8-14
051774	B4-50
051825	B4-100
051826	B4-99
051827	B4-99
051841	B15-52, B16-35
051878	B4-20
051879	B4-20
051880	B4-20
051885	B7-22
051888	B8-14
051889	B8-10
051890	B8-10
051891	B8-16
051892	B8-16
051906	B4-99
051931	B4-58
051987	B4-54
051991	B4-56
051992	B4-56
052002	B4-60
052003	B4-60
052004	B4-56, B4-60
052005	B4-26
052006	B4-56
052007	B4-56
052008	B4-56
052009	B4-54
052010	B4-54
052011	B4-36
052012	B4-12
052015	B4-99
052016	B4-50
052017	B4-60
052032	B4-88
052045	B7-34
052047	B4-100
052048	B4-100
052081	B15-85, B15-92
052093	B2-43, B6-54
052094	B4-50
052101	B4-12
052194	B4-70
052199	B4-70
052205	B4-60
052220	B4-34
052224	B4-24
052275	B4-26
052276	B4-100
052291	B4-56
052294	B4-99
052302	B4-60
052311	B4-99
052413	B4-18
052414	B4-18
052472	B4-32
052478	B4-100
052531	B4-99
052532	B4-100
052535	B6-31
052540	B4-99
052546	B6-46
052550	B4-100
052567	B7-30
052570	B15-52, B16-35
052604	B4-99
052618	B4-99
052620	B2-42
052621	B2-42
052622	B2-42
052623	B2-42
052626	B6-42
052637	B15-52, B16-35
052638	B15-52, B16-35
052639	B15-52, B16-35
052640	B15-52, B16-35
052641	B15-52, B16-35
052642	B15-52, B16-35
052643	B15-52, B16-35
052644	B15-52, B16-35
052645	B4-88
052668	B6-31
052722	B6-46
052729	B7-24
052762	B7-14
052763	B7-14
052792	B4-14
052794	B4-14
052906	B4-50
052931	B6-26
052932	B9-14
052939	B4-72
052959	B7-30
052981	B2-42
052984	B6-26
053007	B9-18
053008	B9-6
053011	B6-22
053021	B4-24
053025	B4-24
053042	B9-6
053045	B6-53
053047	B9-6
053067	B10-67
053088	B16-41
053140	B6-31
053169	B4-99
053170	B4-12, B4-20
053175	B4-36
053183	B4-24
053201	B16-35
053219	B7-22
053320	B4-84
053326	B7-24
053339	B7-22
053411	B7-22
053412	B7-22
053413	B7-22
053414	B7-22
053415	B7-22
053416	B7-22
053417	B7-22
053418	B7-22
053493	B6-42
053517	B6-46
053563	B4-100
053565	B4-90
053617	B7-24
053628	B10-67
053662	B8-10
053670	B4-99
053717	B4-16
053718	B4-16
053719	B4-28
053763	B9-22
053776	B4-88, B4-94
053784	B6-40
053871	B4-101
053883	B4-36
053894	B4-101
053895	B4-101
053901	B4-62
053955	B4-100
053986	B2-43, B6-54
054009	B4-18
054019	B4-90
054063	B4-101
054065	B4-100
054142	B6-26
054145	B2-42
054190	B4-99
054196	B4-90
054203	B4-99, B4-100
054225	B4-90
054276	B4-99
054300	B4-99
054314	B4-99
054315	B4-100

PART NUMBER INDEX

Part Number	Page
054316	B4-100
054342	B4-99
054390	B6-48
054411	B6-48
054412	B4-100
054419	B4-99
054431	B4-90
054436	B4-32
054455	B6-16
054495	B8-8
054534	B4-99
054548	B4-32
054556	B4-100
054580	B4-101
054593	B4-100
054726	B4-58
054727	B4-22
054781	B4-32
054782	B4-99
054831	B4-101
054837	B4-101
054843	B4-99
054917	B4-100
054918	B4-100
054934	B4-100
054949	B4-88
054950	B7-12
054960	B10-67
055572	B15-54
055654	B15-54
055710	B15-54
055712	B15-54
055714	B15-54
055716	B15-54
055734	B15-54
055740	B15-54
055805	B10-67
055806	B10-67
055807	B10-67
055840	B10-67
055876	B15-54
055881	B15-54
055898	B15-54
055906	B15-54
055907	B15-54
055915	B10-67
055931	B10-67, B14-103, B15-54
055940	B14-103, B15-54
055943	B10-67
056100	B10-51
056102	B10-51
056104	B10-51
056106	B10-51
056108	B10-51
056110	B10-51
056112	B10-51
056114	B10-51
056130	B10-51
056132	B10-51
056134	B10-51
056136	B10-51
056138	B10-51
056140	B10-51
056142	B10-51
056144	B10-51
056440	B2-64
056449	B2-56
056468	B6-53
056481	B4-24
056483	B4-24
056492	B4-68
056497	B2-46
056512	B6-34
056525	B2-26
056526	B2-56
056548	B2-26
056552	B2-31
056553	B2-26
056565	B2-26
056577	B2-51
056578	B4-101
056580	B2-56
056588	B4-100
056593	B2-36
056605	B6-46
056606	B4-16
056610	B6-10
056611	B2-31
056612	B2-31
056630	B4-100
056633	B2-36
056638	B6-46, B6-48
056676	B6-16
056696	B6-28
056728	B15-131
056734	B2-31
056744	B4-12
056750	B4-18
056765	B4-50
056779	B6-44
056780	B6-32
056784	B7-24
056796	B2-26
056797	B2-26
056800	B2-26
056801	B2-31
056802	B2-31
056803	B2-31
056804	B2-31
056805	B2-31
056806	B2-36
056807	B2-36
056808	B2-36
056809	B2-36
056810	B2-36
056811	B4-28
056830	B9-10
056845	B4-40
056855	B4-14
056862	B7-24
056864	B4-99
056867	B6-28
056889	B6-31
056890	B6-32
056893	B2-56
056902	B4-38
056907	B4-60
056911	B4-101
056912	B4-94
056929	B4-40
056961	B6-26
056962	B6-26
056964	B2-31
056967	B6-26
056968	B6-34
056970	B6-34
056971	B2-31
057102	B2-42
057114	B4-100
057132	B4-100
057201	B4-88
057212	B4-100
057220	B4-84
057260	B15-103
057265	B4-101
057266	B6-48
057338	B4-99
057354	B4-88
057361	B4-84
057363	B4-100
057368	B4-100
057414	B4-24
057442	B2-48
057474	B4-99
057475	B6-40
057487	B4-100
057524	B2-56
057543	B6-42
057594	B2-56
057603	B4-20
057658	B6-42
057683	B4-101
057687	B2-56
057692	B7-22
057707	B4-39
057708	B4-100
057709	B4-62
057770	B6-46
057800	B4-100
057801	B4-100
057802	B4-90
057839	B4-101
057847	B4-99
057854	B8-14
057878	B4-84
057898	B2-46
057899	B2-64
057906	B4-101
057907	B2-64
057908	B2-59
057958	B15-54
057966	B15-54
058081	B6-44
058157	B4-90, B4-94
058183	B4-100
058194	B4-99
058233	B4-101
058262	B4-99
058263	B4-99
058275	B9-6
058294	B2-64
058311	B2-59
058336	B2-59
058345	B2-42
058347	B6-48
058380	B4-100
058395	B6-36
058400	B4-26
058404	B2-56
058470	B2-56
058514	B2-65
058515	B2-57
058516	B2-48
058529	B4-50
058544	B4-50
058545	B4-50
058593	B2-56
058594	B2-64
058595	B2-64
058596	B2-46
058597	B2-46
058619	B4-100
058624	B4-26
058625	B6-26
058630	B4-84
058632	B2-51
058633	B4-100
058647	B6-46
058648	B2-59
058652	B4-101
058665	B2-42
058699	B15-52
058702	B4-14
058705	B4-76
058736	B4-58
058738	B4-101
058778	B9-16
058779	B9-16
058792	B2-56
058852	B4-100
058897	B4-70
058898	B6-34
058902	B15-52
058903	B15-52
058904	B15-52
058905	B15-52
058906	B15-52
058907	B15-52
058908	B15-52

PART NUMBER INDEX

Part Number	Page	Part Number	Page	Part Number	Page	Part Number	Page
058909	B15-52	061083	B11-19	062742	B5-16	063772	B14-103
058910	B2-64	061084	B11-19	062746	B4-42	063773	B14-103
058915	B4-101	061085	B11-19	062773	B6-46	063774	B14-103
058931	B2-46	061086	B11-19	062779	B4-100	063775	B14-103
058941	B2-56	061087	B11-19	062781	B6-32	063776	B14-103
058944	B2-46	062040	B11-45	062829	B4-99	064000	B2-31
058965	B2-42	062070	B11-45	062835	B2-36	064064	B2-46
058975	B2-46	062143	B6-14	062837	B2-46, B2-56	064070	B16-12
058989	B2-42	062152	B6-34	062842	B4-60	064071	B16-12
058994	B6-42	062157	B4-100	062861	B5-14	064072	B16-12
058996	B7-34	062162	B4-14	062862	B5-14	064073	B16-12
058997	B6-16, B6-18	062176	B6-54	062874	B2-26	064074	B16-12
059593	B6-46	062178	B4-14, B4-26	062875	B2-48	064075	B16-12
059595	B9-16	062182	B4-100	062877	B4-99	064076	B16-12
059596	B9-16	062184	B6-46	062879	B2-26	064077	B16-12
059614	B4-100	062186	B4-26	062880	B6-50, B6-51	064079	B5-28
059636	B4-101	062187	B6-12	062881	B6-46, B6-48	064089	B4-40
059637	B4-30	062260	B4-46	062893	B9-20	064096	B7-30
059667	B7-12	062263	B6-36	062897	B4-60	064136	B4-28
059673	B4-99	062270	B14-58	062899	B7-30	064147	B2-54
059680	B6-26	062281	B6-42	062901	B2-35	064149	B4-90, B4-94
059696	B4-100	062285	B6-48	062913	B2-31	064153	B16-12
059704	B6-46	062304	B4-28	062945	B9-18	064154	B16-12
059705	B6-34	062306	B6-46	062958	B5-14	064155	B16-12
059722	B2-46	062307	B7-22	062975	B4-76	064156	B16-12
059737	B4-99	062309	B4-100	062978	B5-12	064157	B16-12
059754	B6-53	062317	B2-59	062993	B5-12	064178	B7-30
059758	B6-48	062321	B4-28	062994	B2-31	064198	B4-44
059785	B4-16	062337	B9-28	063359	B11-55	064203	B4-56
059798	B2-26	062339	B9-28	063360	B11-55	064211	B5-26
059799	B2-26	062340	B2-36	063361	B11-55	064214	B4-56
059811	B8-14	062373	B6-40	063362	B11-55	064230	B7-12
059816	B4-50	062379	B6-26	063363	B11-55	064237	B4-101
059821	B4-99	062407	B6-34	063366	B11-55	064249	B4-26
059823	B2-56	062408	B6-34	063389	B11-55	064255	B2-31
059844	B4-101	062438	B6-26	063390	B11-55	064289	B7-26
059850	B6-26	062439	B9-18	063392	B11-55	064300	B6-46, B6-48
059857	B6-26	062443	B6-52	063393	B11-55	064306	B2-26
059869	B2-43, B6-54	062454	B9-22	063396	B11-55	064335	B4-58
059870	B2-26	062461	B14-58	063411	B11-55	064341	B2-31
059880	B6-42	062475	B6-34	063420	B11-57	064361	B4-40
059882	B6-16	062491	B6-34	063421	B11-57	064430	B6-42
059954	B4-100	062497	B9-19	063422	B11-57	064450	B4-16
060578	B10-53	062500	B7-20	063424	B11-57	064463	B5-14
060579	B10-53	062509	B8-16	063426	B11-57	064472	B5-26, B5-30
060745	B10-53	062525	B6-31	063429	B11-57	064473	B6-28
060746	B10-53	062542	B2-36	063450	B11-57	064480	B4-40
060747	B10-53	062570	B4-94	063451	B11-57	064483	B9-12
060748	B10-53	062572	B4-99	063452	B11-57	064503	B2-54
060749	B10-53	062575	B6-32	063454	B11-57	064535	B6-58
060750	B10-53	062628	B2-64	063456	B11-57	064536	B7-22
060751	B10-53	062648	B4-40	063459	B11-57	064537	B4-28
060752	B10-53	062676	B4-100	063694	B10-67	064557	B4-100
060753	B10-53	062682	B5-14	063765	B14-103	064572	B2-46
060754	B10-53	062686	B4-40	063766	B14-103	064584	B2-62
060755	B10-53	062691	B4-76	063767	B14-103	064586	B4-59, B4-62
060756	B10-53	062700	B14-58	063768	B14-103	064624	B6-32
060905	B15-114	062702	B6-48	063769	B14-103	064637	B4-24
060906	B15-114	062738	B6-42	063770	B14-103	064656	B4-34
061082	B11-19	062741	B5-16	063771	B14-103	064670	B5-44

PART NUMBER INDEX

Part Number	Page
064684	B5-22
064689	B4-18
064691	B8-8
064698	B6-46
064704	B4-76
064720	B2-51
064735	B6-31, B6-32
064750	B9-18
064756	B4-28
064762	B7-30
064775	B4-40
064794	B5-18
064825	B6-12
064839	B2-46
064841	B5-14
064853	B4-59
064865	B4-90
064874	B5-18
064875	B5-18
064880	B4-99
064882	B7-12
064890	B6-46
064910	B7-22
064911	B4-58
064912	B4-58
064913	B4-59
064929	B7-28
064943	B4-54
064993	B2-35
064994	B2-24
065238	B11-9
065244	B11-9
065258	B11-14
065260	B11-14
065262	B11-14
065265	B11-14
065268	B11-14
065270	B11-14
065271	B11-14
065274	B11-14
065282	B11-14
065283	B11-14
065284	B11-14
065285	B11-14
065286	B11-14
065287	B11-14
065288	B11-14
065289	B11-9
065290	B11-9
065291	B11-9
065292	B11-9
065293	B11-9
065294	B11-9
065295	B11-9
065296	B11-9
065297	B11-9
065298	B11-11
065299	B11-11
065300	B11-11
065302	B11-11
065303	B11-11
065304	B11-14
065305	B11-14
065306	B11-14
065310	B11-11
065311	B11-9
065312	B11-9
065313	B11-9
065314	B11-9
065315	B11-9
065316	B11-9
065317	B11-9
065530	B9-22
065548	B4-26
065551	B6-58
065555	B7-30
065565	B4-40
065569	B6-48
065576	B4-60
065593	B4-72, B4-73
065595	B4-36, B4-42
065597	B5-22
065598	B5-18
065600	B2-36
065605	B6-26
065607	B5-40
065616	B7-12
065620	B5-14
065632	B6-26
065634	B7-34
065635	B7-24
065636	B9-8
065641	B14-56
065642	B4-70
065644	B4-66, B4-68
065653	B4-60
065655	B2-46
065657	B14-56
065658	B6-26
065666	B7-30
065681	B4-70
065694	B2-30
065699	B4-52
065700	B4-100
065766	B4-34
065770	B6-28
065771	B6-28
065774	B4-22
065776	B5-18
065777	B5-18
065780	B2-64
065784	B6-12, B6-20
065786	B2-56
065945	B2-36
065969	B5-22
066212	B11-30
066213	B11-30
066214	B6-16, B11-30
066215	B11-30
066216	B11-30
066217	B11-30
066218	B11-30
066220	B11-30
066222	B11-30
066223	B11-30
066224	B11-33
066225	B11-33
066226	B11-30
066228	B11-30
066230	B11-30
066231	B11-33
066232	B11-30
066234	B11-30
066235	B11-33
066236	B11-30
066237	B11-30
066238	B11-33
066240	B11-33
066242	B11-33
066243	B11-30
066244	B11-33
066245	B11-33
066246	B11-30
066247	B11-30
066248	B11-30
066249	B11-30
066250	B11-30
066252	B11-30
066253	B11-30
066254	B11-30
066256	B11-30
066257	B11-30
066258	B11-30
066260	B11-33
066261	B11-33
066262	B11-30
066263	B11-30
066266	B11-30
066268	B11-33
066269	B11-30
066270	B11-30
066271	B11-30
066272	B11-33
066273	B11-30
066274	B11-33
066276	B11-33
066278	B11-33
066279	B11-39
066280	B11-39
066281	B11-39
066282	B11-39
066283	B11-39
066284	B11-39
066285	B11-39
066286	B11-39
066287	B11-39
066288	B11-39
066289	B11-39
066290	B11-39
066291	B11-39
066292	B11-39
066293	B11-39
066294	B11-39
066295	B11-39
066296	B11-39
066297	B11-39
066298	B11-39
066299	B11-39
066300	B11-30
066301	B11-30
066302	B11-30
066303	B11-30
066304	B11-30
066305	B11-30
066306	B11-30
066307	B11-30
066308	B11-30
066309	B11-30
066310	B11-30
066311	B11-30
066312	B11-39
066314	B11-39
066315	B11-39
066316	B11-39
066317	B11-39
066318	B11-39
066319	B11-39
066320	B11-39
066321	B11-39
066322	B11-39
066324	B11-39
066325	B11-39
066326	B11-39
066360	B11-33
066363	B11-33
066365	B11-33
066366	B11-33
066367	B11-33
066370	B11-33
066371	B11-33
066372	B11-33
066373	B11-33
066374	B11-33
066375	B11-33
066377	B11-33
066378	B11-33
066379	B11-33
066381	B11-33
066382	B11-33
066384	B11-33
066385	B11-33
066386	B11-33
066388	B11-33
066389	B11-33
066400	B11-33
066403	B11-33
066405	B11-33
066406	B11-33
066407	B11-33
066409	B11-33

PART NUMBER INDEX

Part Number	Page
066411	B11-33
066412	B11-33
066413	B11-33
066414	B11-33
066415	B11-33
066417	B11-33
066418	B11-33
066419	B11-33
066421	B11-33
066422	B11-33
066424	B11-33
066425	B11-33
066426	B11-33
066428	B11-33
066429	B11-33
066444	B11-39
066445	B11-39
066446	B11-39
066447	B11-39
066448	B11-39
066450	B11-39
066451	B11-39
066455	B11-39
066456	B11-39
066457	B11-39
066458	B11-39
066459	B11-39
066460	B11-39
066461	B11-39
066463	B11-39
066464	B11-39
066465	B11-39
066466	B11-39
066467	B11-39
066468	B11-39
066469	B11-39
066471	B11-39
066472	B11-39
066473	B11-39
066475	B11-39
066476	B11-39
066478	B11-39
066479	B11-39
066480	B11-39
066482	B11-39
066483	B11-39
066484	B11-39
066485	B11-39
066486	B11-39
066487	B11-39
066488	B11-39
066489	B11-39
066499	B11-39
066500	B11-39
066501	B11-39
066502	B11-39
066503	B11-39
066504	B11-39
066506	B11-39
066507	B11-39
066509	B11-39
066510	B11-39
066511	B11-39
066512	B11-39
066513	B11-39
066514	B11-39
066515	B11-39
066516	B11-39
066517	B11-39
066519	B11-39
066520	B11-39
066521	B11-39
066522	B11-39
066523	B11-39
066524	B11-39
066526	B11-39
066527	B11-39
066528	B11-39
066530	B11-39
066531	B11-39
066533	B11-39
066534	B11-39
066535	B11-39
066537	B11-39
066538	B11-39
066539	B11-39
066540	B11-39
066541	B11-39
066542	B11-39
066543	B11-39
066544	B11-39
066559	B11-39
066560	B11-39
066561	B11-39
066562	B11-39
066563	B11-39
066564	B11-39
066566	B11-39
066567	B11-39
066569	B11-39
066570	B11-39
066571	B11-39
066572	B11-39
066573	B11-39
066574	B11-39
066575	B11-39
066576	B11-39
066577	B11-39
066578	B11-39
066580	B11-39
066581	B11-39
066582	B11-39
066583	B11-39
066584	B11-39
066585	B11-39
066587	B11-39
066588	B11-39
066589	B11-39
066590	B11-39
066591	B11-39
066593	B11-39
066594	B11-39
066596	B11-39
066598	B11-39
066600	B11-39
066601	B11-39
066602	B11-39
066603	B11-39
066604	B11-39
066605	B11-39
066606	B11-39
066607	B11-39
066629	B14-104, B16-22
066630	B14-104, B16-22
066631	B14-104, B16-22
066632	B14-104, B16-22
066633	B14-104, B16-22
066634	B14-104, B16-22
066635	B14-104, B16-22
066636	B14-104, B16-22
066637	B14-104, B16-22
066638	B14-104, B16-22
066642	B14-104, B16-22
066643	B14-104, B16-22
066644	B14-104
067007	B11-43
067016	B11-43
067019	B4-36
067031	B11-43
067034	B11-43
067042	B11-43
067043	B11-43
067044	B11-43
067045	B11-43
067046	B11-43
067047	B11-43
067048	B11-43
067049	B11-43
067050	B11-43
067051	B11-43
067052	B11-43
067053	B11-43
067054	B11-43
067055	B11-43
067056	B11-43
067057	B11-43
067060	B11-43
067061	B11-43
067072	B11-43
067073	B11-43
067075	B11-43
067078	B11-43
067100	B11-43
067103	B11-43
067120	B11-43
067123	B11-43
067135	B11-43
067138	B11-43
067149	B11-44
067151	B11-44
067152	B11-44
067153	B11-44
067154	B11-44
067155	B11-44
067156	B11-44
067157	B11-44
067159	B11-44
067164	B11-44
067234	B10-67
067323	B10-67
067326	B15-54
067340	B10-67
067342	B10-67
067343	B10-67
067344	B10-67
067345	B10-67
067346	B10-67
067347	B10-67
067348	B10-67
067350	B10-67
067352	B10-67
067353	B10-67
067354	B10-67
067355	B10-67
067356	B10-67
067357	B10-67
067501	B15-54
067503	B15-54
067509	B15-54
067511	B15-54
067517	B15-54
067519	B15-54
067520	B15-54
067521	B15-54
067576	B10-67, B14-103, B15-54
067601	B9-20
067630	B2-26
067642	B4-54
067652	B4-16
067663	B4-34
067664	B8-10
067666	B4-36
067674	B4-42
067678	B2-24
067679	B4-14
067710	B4-99
067713	B5-12
067726	B6-44
067742	B4-16
067774	B4-100
067777	B5-14
067783	B6-12
067829	B4-62
067830	B4-100
067839	B2-26
067865	B5-12
067868	B4-64
067874	B4-54
067892	B4-52

PART NUMBER INDEX

Part Number	Page
067902	B4-88
067903	B6-42
067910	B5-12
067919	B2-46
067921	B14-56
067922	B14-56
067925	B4-14
067926	B7-22
067958	B6-28
067959	B4-36
067969	B6-34
067970	B6-26
067986	B2-56
067996	B2-46
067997	B6-28
068008	B6-54
068013	B4-88
068025	B4-26
068053	B2-64
068061	B6-16
068066	B4-100
068068	B4-30
068071	B5-20, B7-20
068088	B4-99
068092	B7-30
068118	B7-22
068184	B4-72
068185	B4-99
068195	B7-16
068196	B7-16
068197	B7-16
068198	B7-16
068199	B7-16
068200	B7-16
068201	B7-16
068202	B7-18
068203	B7-18
068204	B7-18
068205	B7-18
068206	B7-18
068207	B7-28
068208	B7-28
068209	B7-28
068210	B7-28
068211	B7-28
068212	B7-28
068213	B7-24
068214	B7-24
068215	B7-24
068216	B7-24
068230	B5-18
068232	B6-48
068234	B2-28
068236	B2-26
068239	B4-101
068266	B4-100
068273	B5-40
068283	B2-31
068290	B4-99
068301	B4-58
068307	B4-22
068320	B6-34
068321	B6-42
068322	B2-46
068329	B5-22
068361	B4-20
068372	B4-12
068373	B6-16, B6-18
068374	B4-76
068387	B9-18
068389	B6-46
068400	B9-12
068404	B4-94
068424	B2-64
068428	B8-12
068471	B7-34
068472	B5-22
068478	B4-92
068495	B2-46
068532	B4-48
068537	B6-12
068540	B6-54
068561	B9-18
068571	B4-56
068572	B4-56
068573	B4-56
068576	B14-56
068603	B4-14
068608	B6-52
068622	B5-12
068643	B6-26
068650	B6-46
068659	B4-72
068662	B5-22
068663	B6-32
068673	B5-22
068680	B5-22
068682	B5-22
068683	B5-14
068685	B5-32
068686	B5-22
068687	B2-62
068715	B5-14
068716	B8-16
068720	B4-50
068726	B5-10
068727	B5-10
068743	B7-16
068747	B9-12
068756	B6-42
068758	B6-34
068760	B4-20
068763	B9-20
068774	B14-56
068775	B14-56
068777	B6-12
068784	B9-16
068785	B4-58
068789	B4-48
068790	B9-22
068800	B4-24
068803	B9-18
068809	B8-16
068839	B4-40
068840	B4-50
068849	B7-42
068855	B9-18
068861	B5-26
068864	B9-10
068865	B5-14, B5-22
068866	B7-24
068867	B9-16
068871	B5-22
068872	B5-18
068878	B5-32
068889	B4-94
068901	B7-26
068905	B14-56
068915	B4-40
068937	B4-40
068973	B4-59, B4-62
068996	B4-46
069034	B11-14
069039	B11-14
069045	B11-14
069046	B11-14
069060	B11-14
069061	B11-14
069062	B11-14
069063	B11-14
069064	B11-14
069065	B11-14
069066	B11-14
069067	B11-14
069069	B11-14
069286	B16-12
069287	B16-12
069288	B16-12
069289	B16-12
069296	B16-12
069297	B16-12
069303	B16-12
069304	B16-12
069305	B16-12
069306	B16-12
069307	B16-12
069308	B16-12
069312	B16-12
069313	B16-12
069316	B16-12
069317	B16-12
069340	B14-97
069341	B14-97
069342	B14-97
069343	B14-97
069344	B14-97
069345	B14-97
069346	B14-97
069347	B14-97
069348	B14-97
069349	B14-97
069350	B14-97
069351	B14-97
069352	B14-97
069353	B14-97
069354	B14-99
069355	B14-99
069356	B14-99
069357	B14-99
069358	B14-99
069359	B14-99
069360	B14-99
069361	B14-99
069362	B14-99
069363	B14-99
069364	B14-99
069365	B14-99
069366	B14-99
069367	B14-99
069368	B14-97
069369	B14-97
069370	B14-97
069371	B14-97
069372	B14-97
069373	B14-97
069374	B14-97
069375	B14-97
069376	B14-97
069377	B14-97
069378	B14-97
069379	B14-97
069380	B14-97
069381	B14-97
069382	B14-99
069383	B14-99
069384	B14-99
069385	B14-99
069386	B14-99
069387	B14-99
069388	B14-99
069389	B14-99
069390	B14-99
069391	B14-99
069392	B14-99
069393	B14-99
069394	B14-99
069395	B14-99
069400	B14-31
069401	B14-31
069402	B14-31
069403	B14-31
069404	B14-31
069405	B14-31
069406	B14-31
069407	B14-31
069408	B14-31
069409	B14-31
069410	B14-31
069411	B14-31
069412	B14-31

PART NUMBER INDEX

Part Number	Page	Part Number	Page	Part Number	Page	Part Number	Page
069413	B14-31	069473	B14-33	069541	B14-43	069602	B14-67
069414	B14-33	069474	B14-33	069542	B14-43	069603	B14-67
069415	B14-33	069475	B14-33	069543	B14-43	069604	B14-69
069416	B14-33	069476	B14-33	069544	B14-43	069605	B14-69
069417	B14-33	069477	B14-33	069545	B14-43	069606	B14-69
069418	B14-33	069478	B14-33	069546	B14-43	069607	B14-69
069419	B14-33	069479	B14-33	069547	B14-43	069608	B14-69
069420	B14-33	069480	B14-33	069548	B14-43	069609	B14-69
069421	B14-33	069481	B14-33	069549	B14-45	069610	B14-69
069422	B14-33	069482	B14-33	069550	B14-45	069611	B14-69
069423	B14-33	069483	B14-33	069551	B14-45	069612	B14-69
069424	B14-33	069484	B14-31	069552	B14-45	069630	B14-67
069425	B14-33	069485	B14-31	069553	B14-45	069631	B14-67
069426	B14-33	069486	B14-31	069554	B14-45	069632	B14-67
069427	B14-33	069487	B14-31	069555	B14-45	069633	B14-67
069428	B14-31	069488	B14-31	069556	B14-43	069634	B14-67
069429	B14-31	069489	B14-31	069557	B14-43	069635	B14-67
069430	B14-31	069490	B14-31	069558	B14-43	069636	B14-67
069431	B14-31	069491	B14-31	069559	B14-43	069637	B14-67
069432	B14-31	069492	B14-31	069560	B14-43	069638	B14-67
069433	B14-31	069493	B14-31	069561	B14-43	069639	B14-67
069434	B14-31	069494	B14-31	069562	B14-43	069640	B14-67
069435	B14-31	069495	B14-31	069563	B14-43	069641	B14-67
069436	B14-31	069496	B14-31	069564	B14-43	069642	B14-69
069437	B14-31	069497	B14-31	069565	B14-43	069643	B14-69
069438	B14-31	069498	B14-33	069566	B14-43	069644	B14-69
069439	B14-31	069499	B14-33	069567	B14-45	069645	B14-69
069440	B14-31	069500	B14-33	069568	B14-45	069646	B14-69
069441	B14-31	069501	B14-33	069569	B14-45	069647	B14-69
069442	B14-33	069502	B14-33	069570	B14-45	069648	B14-69
069443	B14-33	069503	B14-33	069571	B14-45	069649	B14-69
069444	B14-33	069504	B14-33	069572	B14-45	069650	B14-69
069445	B14-33	069505	B14-33	069573	B14-45	069651	B14-67
069446	B14-33	069506	B14-33	069574	B14-43	069652	B14-67
069447	B14-33	069507	B14-33	069575	B14-43	069653	B14-67
069448	B14-33	069508	B14-33	069576	B14-43	069654	B14-67
069449	B14-33	069509	B14-33	069577	B14-43	069655	B14-67
069450	B14-33	069510	B14-33	069578	B14-43	069656	B14-67
069451	B14-33	069511	B14-33	069579	B14-43	069657	B14-67
069452	B14-33	069520	B14-43	069580	B14-43	069658	B14-67
069453	B14-33	069521	B14-43	069581	B14-43	069659	B14-67
069454	B14-33	069522	B14-43	069582	B14-43	069660	B14-67
069455	B14-33	069523	B14-43	069583	B14-43	069661	B14-67
069456	B14-31	069524	B14-43	069584	B14-43	069662	B14-67
069457	B14-31	069525	B14-43	069585	B14-45	069663	B14-69
069458	B14-31	069526	B14-43	069586	B14-45	069664	B14-69
069459	B14-31	069527	B14-43	069587	B14-45	069665	B14-69
069460	B14-31	069528	B14-43	069588	B14-45	069666	B14-69
069461	B14-31	069529	B14-43	069589	B14-45	069667	B14-69
069462	B14-31	069530	B14-43	069590	B14-45	069668	B14-69
069463	B14-31	069531	B14-45	069591	B14-45	069669	B14-69
069464	B14-31	069532	B14-45	069593	B14-67	069670	B14-69
069465	B14-31	069533	B14-45	069594	B14-67	069671	B14-69
069466	B14-31	069534	B14-45	069595	B14-67	069672	B14-67
069467	B14-31	069535	B14-45	069596	B14-67	069673	B14-67
069468	B14-31	069536	B14-45	069597	B14-67	069674	B14-67
069469	B14-31	069537	B14-45	069598	B14-67	069675	B14-67
069470	B14-33	069538	B14-43	069599	B14-67	069676	B14-67
069471	B14-33	069539	B14-43	069600	B14-67	069677	B14-67
069472	B14-33	069540	B14-43	069601	B14-67	069678	B14-67

PART NUMBER INDEX

Part Number	Page
069679	B14-67
069680	B14-67
069681	B14-67
069682	B14-67
069683	B14-67
069684	B14-69
069685	B14-69
069686	B14-69
069687	B14-69
069688	B14-69
069689	B14-69
069690	B14-69
069691	B14-69
069692	B14-69
069693	B14-71
069694	B14-71
069695	B14-71
069696	B14-71
069697	B14-71
069698	B14-71
069699	B14-71
069700	B14-71
069701	B14-71
069702	B14-71
069703	B14-71
069704	B14-71
069705	B14-71
069706	B14-71
069707	B14-73
069708	B14-73
069709	B14-73
069710	B14-73
069711	B14-73
069712	B14-73
069713	B14-73
069714	B14-73
069715	B14-73
069716	B14-73
069717	B14-73
069718	B14-73
069719	B14-73
069720	B14-73
069721	B14-71
069722	B14-71
069723	B14-71
069724	B14-71
069725	B14-71
069726	B14-71
069727	B14-71
069728	B14-71
069729	B14-71
069730	B14-71
069731	B14-71
069732	B14-71
069733	B14-71
069734	B14-71
069735	B14-73
069736	B14-73
069737	B14-73
069738	B14-73
069739	B14-73
069740	B14-73
069741	B14-73
069742	B14-73
069743	B14-73
069744	B14-73
069745	B14-73
069746	B14-73
069747	B14-73
069748	B14-73
069749	B14-71
069750	B14-71
069751	B14-71
069752	B14-71
069753	B14-71
069754	B14-71
069755	B14-71
069756	B14-71
069757	B14-71
069758	B14-71
069759	B14-71
069760	B14-71
069761	B14-71
069762	B14-71
069763	B14-73
069764	B14-73
069765	B14-73
069766	B14-73
069767	B14-73
069768	B14-73
069769	B14-73
069770	B14-73
069771	B14-73
069772	B14-73
069773	B14-73
069774	B14-73
069775	B14-73
069776	B14-73
069777	B14-71
069778	B14-71
069779	B14-71
069780	B14-71
069781	B14-71
069782	B14-71
069783	B14-71
069784	B14-71
069785	B14-71
069786	B14-71
069787	B14-71
069788	B14-71
069789	B14-71
069790	B14-71
069791	B14-73
069792	B14-73
069793	B14-73
069794	B14-73
069795	B14-73
069796	B14-73
069797	B14-73
069798	B14-73
069799	B14-73
069800	B14-73
069801	B14-73
069802	B14-73
069803	B14-73
069804	B14-73
069805	B14-83
069806	B14-83
069807	B14-83
069808	B14-83, B14-87
069809	B14-83, B14-87
069810	B14-83
069811	B14-83, B14-87
069812	B14-83, B14-87
069813	B14-83
069814	B14-83, B14-87
069815	B14-83, B14-87
069816	B14-83, B14-87
069817	B14-83, B14-87
069818	B14-83
069819	B14-83
069820	B14-83, B14-87
069821	B14-83, B14-87
069822	B14-85, B14-89
069823	B14-85, B14-89
069824	B14-85, B14-89
069825	B14-85, B14-89
069826	B14-85, B14-89
069827	B14-85, B14-89
069828	B14-85, B14-89
069829	B14-85, B14-89
069830	B14-85
069831	B14-85, B14-89
069832	B14-85, B14-89
069833	B14-85
069834	B14-85
069835	B14-85
069836	B14-85
069837	B14-83
069838	B14-83
069839	B14-83
069840	B14-83, B14-87
069841	B14-83, B14-87
069842	B14-83
069843	B14-83, B14-87
069844	B14-83, B14-87
069845	B14-83
069846	B14-83, B14-87
069847	B14-83, B14-87
069848	B14-83, B14-87
069849	B14-83, B14-87
069850	B14-83
069851	B14-83
069852	B14-83, B14-87
069853	B14-83, B14-87
069854	B14-85, B14-89
069855	B14-85, B14-89
069856	B14-85, B14-89
069857	B14-85, B14-89
069858	B14-85, B14-89
069859	B14-85, B14-89
069860	B14-85, B14-89
069861	B14-85, B14-89
069862	B14-85
069863	B14-85, B14-89
069864	B14-85, B14-89
069865	B14-85
069866	B14-85
069867	B14-85
069868	B14-85
069869	B14-83
069870	B14-83
069871	B14-83
069872	B14-83, B14-87
069873	B14-83, B14-87
069874	B14-83
069875	B14-83, B14-87
069876	B14-83, B14-87
069877	B14-83
069878	B14-83, B14-87
069879	B14-83, B14-87
069880	B14-83, B14-87
069881	B14-83, B14-87
069882	B14-83
069883	B14-83
069884	B14-83, B14-87
069885	B14-83, B14-87
069886	B14-85, B14-89
069887	B14-85, B14-89
069888	B14-85, B14-89
069889	B14-85, B14-89
069890	B14-85, B14-89
069891	B14-85, B14-89
069892	B14-85, B14-89
069893	B14-85, B14-89
069894	B14-85
069895	B14-85, B14-89
069896	B14-85, B14-89
069897	B14-85
069898	B14-85
069899	B14-85
069900	B14-85
069901	B14-83
069902	B14-83
069903	B14-83
069904	B14-83, B14-87
069905	B14-83, B14-87
069906	B14-83
069907	B14-83, B14-87
069908	B14-83, B14-87
069909	B14-83
069910	B14-83, B14-87
069911	B14-83, B14-87
069912	B14-83, B14-87
069913	B14-83, B14-87
069914	B14-83
069915	B14-83
069916	B14-83, B14-87
069917	B14-83, B14-87
069918	B14-85, B14-89

PART NUMBER INDEX

Part Number	Page
069919	B14-85, B14-89
069920	B14-85, B14-89
069921	B14-85, B14-89
069922	B14-85, B14-89
069923	B14-85, B14-89
069924	B14-85, B14-89
069925	B14-85, B14-89
069926	B14-85
069927	B14-85, B14-89
069928	B14-85, B14-89
069929	B14-85
069930	B14-85
069931	B14-85
069932	B14-85
069960	B12-51, B14-107, B14-110, B16-21
069961	B12-51, B14-107, B14-110, B16-21
069962	B12-51, B14-107, B14-110, B16-21
069963	B12-51, B14-107, B14-110, B16-21
069964	B12-51, B14-107, B14-110, B16-21
069965	B12-51, B14-107, B14-110, B16-21
069966	B12-51, B14-107, B14-110, B16-21
069967	B12-51, B14-107, B14-110, B16-21
069968	B12-51, B14-107, B14-110, B16-21
069969	B12-51, B14-107, B14-110, B16-21
069970	B12-51
069971	B12-51
069972	B12-51
069973	B12-51
069975	B12-51
069983	B16-21
069984	B16-21
070000	B12-49
070001	B12-49
070002	B12-49
070003	B12-49
070004	B12-49
070005	B12-49
070006	B12-49
070007	B12-49
070008	B12-49
070009	B12-49
070010	B12-49
070011	B12-49
070012	B12-49
070013	B12-49
070014	B12-49
070015	B12-49
070016	B12-49
070017	B12-49
070018	B12-49
070019	B12-49
070020	B12-49
070021	B12-49
070022	B12-49
070023	B12-49
070024	B12-49
070025	B12-49
070026	B12-49
070027	B12-49
070028	B12-49
070029	B12-49
070030	B12-49
070031	B12-49
070053	B16-14
070054	B14-52
070055	B14-52
070056	B14-52
070057	B14-52
070058	B14-54
070059	B14-54
070060	B14-54
070061	B14-54
070062	B14-54
070063	B14-54
070064	B14-52
070065	B14-52
070066	B14-52
070067	B14-52
070068	B14-54
070069	B14-54
070070	B14-54
070071	B14-54
070072	B14-54
070073	B14-54
070074	B14-52
070075	B14-52
070076	B14-52
070077	B14-52
070078	B14-54
070079	B14-54
070080	B14-54
070081	B14-54
070082	B14-54
070083	B14-54
070084	B14-52
070085	B14-52
070086	B14-52
070087	B14-52
070088	B14-54
070089	B14-54
070090	B14-54
070091	B14-54
070092	B14-54
070093	B14-54
070094	B14-54
070095	B14-54
070096	B14-54
070097	B14-54
070160	B14-106
070161	B14-106
070162	B14-106
070163	B14-106
070164	B14-106
070165	B14-106
070166	B14-106
070167	B14-106
070168	B14-106
070169	B14-106
070170	B14-106
070171	B14-106
070172	B14-106
070173	B14-106
070174	B14-106
070175	B14-106
070176	B14-106
070177	B14-106
070178	B12-50, B14-106
070179	B14-106
070180	B14-106
070181	B14-106
070182	B14-106
070183	B14-106
070184	B14-106
070185	B14-106
070186	B12-50, B14-106
070187	B14-106
070188	B14-106
070189	B12-50, B14-106
070190	B14-106
070191	B12-50, B14-106
070192	B14-106
070193	B12-50, B14-106
070194	B14-106
070240	B12-50
070241	B12-50
070242	B12-50
070243	B12-50
070244	B12-50
070245	B12-50
070246	B12-50
070247	B12-50
070248	B12-50
070249	B12-50
070250	B12-50
070251	B16-21
070252	B16-21
070253	B16-21
070254	B16-21
070255	B16-21
070256	B16-21
070257	B16-21
070258	B16-21
070259	B16-21
070260	B16-21
070261	B16-21
070262	B16-21
070263	B16-21
070264	B16-21
070265	B16-21
070266	B16-21
070267	B16-21
070272	B12-15
070273	B12-15
070274	B12-15
070276	B12-15
070277	B12-15
070278	B12-15
070279	B12-15
070280	B12-15
070282	B12-15
070284	B12-15
070285	B12-15
070286	B12-15
070288	B12-15
070290	B12-15
070295	B12-15
070296	B12-15
070297	B12-15
070299	B12-15
070300	B12-15
070301	B12-15
070302	B12-15
070303	B12-15
070305	B12-15
070307	B12-15
070308	B12-15
070309	B12-15
070311	B12-15
070313	B12-15
070318	B12-15
070319	B12-15
070320	B12-15
070322	B12-15
070323	B12-15
070324	B12-15
070325	B12-15
070326	B12-15
070328	B12-15
070330	B12-15
070331	B12-15
070332	B12-15
070334	B12-15
070336	B12-15
070341	B12-15
070342	B12-15
070343	B12-15
070345	B12-15
070346	B12-15
070347	B12-15
070348	B12-15
070349	B12-15
070351	B12-15
070353	B12-15
070354	B12-15
070355	B12-15
070357	B12-15
070359	B12-15
070361	B12-23
070362	B12-23
070363	B12-23

PART NUMBER INDEX

Part Number	Page
070365	B12-23
070367	B12-23
070368	B12-23
070369	B12-23
070371	B12-23
070373	B12-23
070375	B12-23
070377	B12-23
070379	B12-23
070380	B12-23
070381	B12-23
070383	B12-23
070385	B12-23
070386	B12-23
070387	B12-23
070389	B12-23
070391	B12-23
070393	B12-23
070395	B12-23
070397	B12-23
070398	B12-23
070399	B12-23
070401	B12-23
070403	B12-23
070404	B12-23
070405	B12-23
070407	B12-23
070409	B12-23
070411	B12-23
070413	B12-23
070415	B12-23
070416	B12-23
070417	B12-23
070419	B12-23
070421	B12-23
070422	B12-23
070423	B12-23
070425	B12-23
070427	B12-23
070429	B12-23
070431	B12-23
070436	B12-31
070437	B12-31
070438	B12-31
070440	B12-31
070441	B12-31
070442	B12-31
070443	B12-31
070444	B12-31
070446	B12-31
070448	B12-31
070449	B12-31
070450	B12-31
070470	B12-31
070471	B12-31
070472	B12-31
070474	B12-31
070475	B12-31
070476	B12-31
070477	B12-31
070478	B12-31
070480	B12-31
070482	B12-31
070483	B12-31
070484	B12-31
070491	B12-31
070492	B12-31
070493	B12-31
070495	B12-31
070496	B12-31
070497	B12-31
070498	B12-31
070499	B12-31
070501	B12-31
070503	B12-31
070504	B12-31
070505	B12-31
070523	B12-31
070524	B12-31
070525	B12-31
070527	B12-31
070528	B12-31
070529	B12-31
070530	B12-31
070531	B12-31
070533	B12-31
070535	B12-31
070536	B12-31
070537	B12-31
070541	B12-33
070542	B12-33
070543	B12-33
070545	B12-33
070546	B12-33
070547	B12-33
070548	B12-33
070549	B12-33
070551	B12-33
070553	B12-33
070554	B12-33
070555	B12-33
070557	B12-33
070559	B12-33
070564	B12-33
070565	B12-33
070566	B12-33
070568	B12-33
070569	B12-33
070570	B12-33
070571	B12-33
070572	B12-33
070574	B12-33
070576	B12-33
070577	B12-33
070578	B12-33
070580	B12-33
070582	B12-33
070600	B12-33
070601	B12-33
070602	B12-33
070604	B12-33
070605	B12-33
070606	B12-33
070607	B12-33
070608	B12-33
070610	B12-33
070612	B12-33
070613	B12-33
070614	B12-33
070616	B12-33
070618	B12-33
070620	B16-21
070621	B16-21
070622	B16-21
070623	B16-21
070624	B16-21
070625	B16-21
070626	B16-21
070627	B16-21
070628	B16-21
070629	B16-21
070630	B16-21
070631	B16-21
070632	B16-21
070633	B16-21
070634	B16-21
070635	B16-21
070636	B16-21
070644	B12-39, B12-41
070645	B12-39, B12-41
070646	B12-39
070648	B12-39, B12-41
070649	B12-39
070650	B12-39, B12-41
070651	B12-39, B12-41
070652	B12-39, B12-41
070654	B12-39, B12-41
070656	B12-39, B12-41
070657	B12-39, B12-41
070658	B12-39, B12-41
070660	B12-39, B12-41
070662	B12-39, B12-41
070664	B12-39
070666	B12-39
070671	B12-39, B12-41
070672	B12-39, B12-41
070673	B12-39
070675	B12-39, B12-41
070676	B12-39
070677	B12-39, B12-41
070678	B12-39, B12-41
070679	B12-39, B12-41
070681	B12-39, B12-41
070683	B12-39, B12-41
070684	B12-39, B12-41
070685	B12-39, B12-41
070687	B12-39, B12-41
070689	B12-39, B12-41
070691	B12-39
070693	B12-39
070698	B12-39, B12-41
070699	B12-39, B12-41
070700	B12-39
070702	B12-39, B12-41
070703	B12-39
070704	B12-39, B12-41
070705	B12-39, B12-41
070706	B12-39, B12-41
070708	B12-39, B12-41
070710	B12-39, B12-41
070711	B12-39, B12-41
070712	B12-39, B12-41
070714	B12-39, B12-41
070716	B12-39, B12-41
070718	B12-39
070720	B12-39
070725	B12-39, B12-41
070726	B12-39, B12-41
070727	B12-39
070729	B12-39, B12-41
070730	B12-39
070731	B12-39, B12-41
070732	B12-39, B12-41
070733	B12-39, B12-41
070735	B12-39, B12-41
070737	B12-39, B12-41
070738	B12-39, B12-41
070739	B12-39, B12-41
070741	B12-39, B12-41
070743	B12-39, B12-41
070745	B12-39
070747	B12-39
070752	B12-43
070753	B12-43
070754	B12-43
070756	B12-43
070757	B12-43
070758	B12-43
070759	B12-43
070760	B12-43
070762	B12-45
070764	B12-45
070765	B12-45
070766	B12-45
070768	B12-45
070770	B12-45
070772	B12-45
070774	B12-45
070779	B12-43
070780	B12-43
070781	B12-43
070783	B12-43
070784	B12-43
070785	B12-43
070786	B12-43
070787	B12-43
070789	B12-45
070791	B12-45
070792	B12-45
070793	B12-45

PART NUMBER INDEX

Part Number	Page
070795	B12-45
070797	B12-45
070799	B12-45
070801	B12-45
070811	B12-47
070812	B12-47
070813	B12-47
070815	B12-47
070817	B12-47
070818	B12-47
070819	B12-47
070821	B12-47
070823	B12-47
070825	B12-47
070827	B12-47
070829	B12-47
070830	B12-47
070831	B12-47
070833	B12-47
070835	B12-47
070836	B12-47
070837	B12-47
070839	B12-47
070841	B12-47
070843	B12-47
070845	B12-47
070853	B12-33
070854	B12-33
070855	B12-33
070857	B12-33
070858	B12-33
070859	B12-33
070860	B12-33
070861	B12-33
070863	B12-33
070865	B12-33
070866	B12-33
070867	B12-33
070869	B12-33
070871	B12-33
070880	B14-100
070881	B14-100
070882	B14-100
070883	B14-100
070884	B14-100
070885	B14-100
070886	B14-100
070887	B14-100
070888	B14-100
070889	B14-100
070890	B14-100
070891	B14-100
070892	B14-100
070893	B14-100
070894	B14-101
070895	B14-101, B14-103
070896	B14-101
070897	B14-101
070898	B14-101
070899	B14-101, B14-103
070900	B14-101
070901	B14-101
070902	B14-101
070903	B14-101, B14-103
070904	B14-101
070905	B14-101
070906	B14-101, B14-103
070907	B14-101
070908	B14-101
070909	B14-101
070910	B14-101
070911	B14-101
070912	B14-100
070913	B14-100
070914	B14-100
070915	B14-100
070916	B14-100
070917	B14-100
070918	B14-100
070919	B14-100
070920	B14-100
070921	B14-100
070922	B14-100
070923	B14-100
070924	B14-100
070925	B14-100
070926	B14-101
070927	B14-101, B14-103
070928	B14-101
070929	B14-101
070930	B14-101
070931	B14-101, B14-103
070932	B14-101
070933	B14-101
070934	B14-101
070935	B14-101, B14-103
070936	B14-101
070937	B14-101
070938	B14-101, B14-103
070939	B14-101
070940	B14-101
070941	B14-101
070942	B14-101
070943	B14-101
070951	B14-52
070952	B14-52
070953	B14-52
070954	B14-52
070955	B14-52
070956	B14-52
070957	B14-52
070958	B14-52
070959	B14-52
070960	B14-52
070961	B14-52
070962	B14-52
070963	B14-52
070964	B14-52
070965	B14-52
070966	B14-52
071000	B16-12, B14-63
071001	B16-12, B14-63
071002	B16-12, B14-63
071003	B16-12, B14-63
071004	B16-12, B14-63
071005	B16-12, B14-63
071006	B16-12, B14-63
071007	B16-12, B14-63
071008	B16-12, B14-63
071009	B16-12, B14-63
071010	B16-12, B14-63
071011	B16-12, B14-63
071012	B16-12, B14-63
071013	B16-12, B14-63
071014	B16-12, B14-63
071015	B16-12, B14-63
071016	B16-12, B14-63
071017	B16-12, B14-63
071018	B16-12, B14-63
071019	B16-12, B14-63
071020	B16-12, B16-12, B14-63
071021	B16-12, B14-63
071022	B16-12, B14-63
071023	B16-12, B14-63
071024	B16-12, B14-63
071025	B16-12, B14-63
071026	B16-12, B14-63
071027	B16-12, B14-63
071028	B16-12, B14-63
071029	B16-12, B14-63
071030	B16-12, B14-63
071031	B16-12, B14-63
071032	B16-12, B14-63
071033	B16-12, B14-63
071034	B16-14, B14-63
071035	B16-14, B14-63
071036	B16-14, B14-63
071037	B16-14, B14-63
071038	B16-14, B14-63
071039	B16-14, B14-63
071040	B16-14, B14-63
071041	B16-14, B14-63
071042	B16-14, B14-63
071043	B16-14, B14-63
071044	B16-14, B14-63
071045	B16-14, B14-63
071046	B16-14, B14-63
071047	B16-14, B14-63
071048	B16-14, B14-63
071049	B16-14, B14-63
071050	B16-14, B14-63
071051	B16-14, B14-63
071052	B16-14, B14-63
071053	B14-63
071054	B16-14, B14-63
071055	B16-14, B14-63
071056	B16-14, B14-63
071057	B16-14, B14-63
071058	B16-14, B14-63
071059	B16-14, B14-63
071060	B16-14, B14-63
071061	B16-14, B14-63
071062	B16-14, B14-63
071063	B16-14, B14-63
071064	B16-14, B14-63
071065	B16-14, B14-63
071066	B16-14, B14-63
071067	B16-14, B14-63
071068	B16-17
071069	B16-17
071070	B16-17
071071	B16-17
071072	B16-17
071073	B16-17
071074	B16-17
071075	B16-17
071076	B16-17
071077	B16-17
071078	B16-17
071079	B16-17
071080	B16-17
071081	B16-17
071082	B16-17
071083	B16-17
071084	B16-17
071085	B16-17
071086	B16-17
071087	B16-17
071088	B16-17
071089	B16-17
071090	B16-17
071091	B16-17
071092	B16-17
071093	B16-17
071094	B16-17
071095	B16-17
071096	B16-17
071097	B16-17
071098	B16-17
071099	B16-17
071100	B16-17
071101	B16-17
071102	B16-12, B14-63
071103	B16-12, B14-63
071104	B16-14, B14-63
071105	B16-14, B14-63
071106	B16-12, B14-63
071107	B16-12, B14-63
071108	B16-14, B14-63
071109	B16-14, B14-63
071114	B16-12
071115	B16-12
071116	B16-17
071117	B16-17
071118	B16-17
071119	B16-17
071120	B14-35
071121	B14-35
071122	B14-35

PART NUMBER INDEX

Part Number	Page	Part Number	Page	Part Number	Page	Part Number	Page
071123	B14-35	071183	B14-35	071243	B14-47	071303	B14-77
071124	B14-35	071184	B14-35	071244	B14-47	071304	B14-77
071125	B14-35	071185	B14-35	071245	B14-47	071305	B14-77
071126	B14-35	071186	B14-35	071246	B14-47	071306	B14-77
071127	B14-35	071187	B14-35	071247	B14-47	071307	B14-77
071128	B14-35	071188	B14-35	071248	B14-47	071308	B14-77
071129	B14-35	071189	B14-35	071249	B14-47	071309	B14-77
071130	B14-37	071190	B14-35	071250	B14-47	071310	B14-77
071131	B14-37	071191	B14-35	071251	B14-47	071311	B14-77
071132	B14-37	071192	B14-35	071252	B14-47	071312	B14-77
071133	B14-37	071193	B14-37	071253	B14-47	071313	B14-75
071134	B14-37	071194	B14-37	071254	B14-47	071314	B14-75
071135	B14-37	071195	B14-37	071255	B14-47	071315	B14-75
071136	B14-37	071196	B14-37	071256	B14-47	071316	B14-75
071137	B14-37	071197	B14-37	071257	B14-47	071317	B14-75
071138	B14-37	071198	B14-37	071258	B14-47	071318	B14-75
071139	B14-37	071199	B14-37	071259	B14-47	071319	B14-75
071140	B14-37	071200	B14-37	071260	B14-47	071320	B14-75
071141	B14-35	071201	B14-37	071261	B14-47	071321	B14-75
071142	B14-35	071202	B14-37	071262	B14-47	071322	B14-75
071143	B14-35	071203	B14-37	071263	B14-47	071323	B14-77
071144	B14-35	071204	B14-47	071264	B14-47	071324	B14-77
071145	B14-35	071205	B14-47	071265	B14-47	071325	B14-77
071146	B14-35	071206	B14-47	071266	B14-47	071326	B14-77
071147	B14-35	071207	B14-47	071267	B14-47	071327	B14-77
071148	B14-35	071208	B14-47	071268	B14-47	071328	B14-77
071149	B14-35	071209	B14-47	071269	B14-47	071329	B14-77
071150	B14-35	071210	B14-47	071270	B14-47	071330	B14-77
071151	B14-37	071211	B14-47	071271	B14-47	071331	B14-77
071152	B14-37	071212	B14-47	071272	B14-89	071332	B14-77
071153	B14-37	071213	B14-47	071273	B14-89	071333	B14-77
071154	B14-37	071214	B14-47	071274	B14-89	071334	B14-77
071155	B14-37	071215	B14-47	071275	B14-89	071335	B14-77
071156	B14-37	071216	B14-47	071276	B14-89	071336	B14-77
071157	B14-37	071217	B14-47	071277	B14-89	071337	B14-77
071158	B14-37	071218	B14-47	071278	B14-89	071338	B14-75
071159	B14-37	071219	B14-47	071279	B14-89	071339	B14-75
071160	B14-37	071220	B14-47	071280	B14-89	071340	B14-75
071161	B14-37	071221	B14-47	071281	B14-89	071341	B14-75
071162	B14-35	071222	B14-47	071282	B14-89	071342	B14-75
071163	B14-35	071223	B14-47	071283	B14-89	071343	B14-75
071164	B14-35	071224	B14-47	071284	B14-89	071344	B14-75
071165	B14-35	071225	B14-47	071285	B14-89	071345	B14-75
071166	B14-35	071226	B14-47	071286	B14-89	071346	B14-75
071167	B14-35	071227	B14-47	071287	B14-89	071347	B14-75
071168	B14-35	071228	B14-47	071288	B14-75	071348	B14-77
071169	B14-35	071229	B14-47	071289	B14-75	071349	B14-77
071170	B14-35	071230	B14-47	071290	B14-75	071350	B14-77
071171	B14-35	071231	B14-47	071291	B14-75	071351	B14-77
071172	B14-37	071232	B14-47	071292	B14-75	071352	B14-77
071173	B14-37	071233	B14-47	071293	B14-75	071353	B14-77
071174	B14-37	071234	B14-47	071294	B14-75	071354	B14-77
071175	B14-37	071235	B14-47	071295	B14-75	071355	B14-77
071176	B14-37	071236	B14-47	071296	B14-75	071356	B14-77
071177	B14-37	071237	B14-47	071297	B14-75	071357	B14-77
071178	B14-37	071238	B14-47	071298	B14-77	071358	B14-77
071179	B14-37	071239	B14-47	071299	B14-77	071359	B14-77
071180	B14-37	071240	B14-47	071300	B14-77	071360	B14-77
071181	B14-37	071241	B14-47	071301	B14-77	071361	B14-77
071182	B14-37	071242	B14-47	071302	B14-77	071362	B14-77

PART NUMBER INDEX

Part Number	Page	Part Number	Page	Part Number	Page	Part Number	Page
071364	B14-75	071424	B12-17	071488	B12-35	071611	B14-47
071365	B14-75	071425	B12-17	071489	B12-35	071612	B14-47
071366	B14-75	071426	B12-17	071490	B12-35	071613	B14-47
071367	B14-75	071427	B12-17	071491	B12-35	071614	B14-47
071368	B14-75	071428	B12-17	071492	B12-35	071615	B14-47
071369	B14-75	071429	B12-17	071493	B12-35	071616	B14-47
071370	B14-75	071430	B12-17	071494	B12-35	071617	B14-47
071371	B14-75	071431	B12-17	071495	B12-35	071618	B14-47
071372	B14-75	071432	B12-17	071496	B12-35	071619	B14-47
071373	B14-75	071433	B12-25	071497	B12-35	071620	B14-47
071374	B14-77	071434	B12-25	071498	B12-35	071621	B14-47
071375	B14-77	071435	B12-25	071499	B12-35	071622	B14-47
071376	B14-77	071436	B12-25	071500	B12-35	071623	B14-47
071377	B14-77	071437	B12-25	071501	B12-35	071624	B14-47
071378	B14-77	071438	B12-25	071502	B12-35	071625	B14-47
071379	B14-77	071439	B12-25	071503	B12-35	071626	B14-47
071380	B14-77	071440	B12-25	071504	B12-35	071627	B14-47
071381	B14-77	071441	B12-25	071505	B12-35	071628	B14-47
071382	B14-77	071442	B12-25	071506	B12-35	071629	B14-47
071383	B14-77	071443	B12-25	071507	B12-35	071630	B14-47
071384	B14-77	071444	B12-25	071508	B12-35	071631	B14-47
071385	B14-77	071445	B12-25	071509	B12-35	071632	B14-47
071386	B14-77	071446	B12-25	071510	B12-35	071633	B14-47
071387	B14-77	071447	B12-25	071511	B12-35	071634	B14-47
071388	B14-77	071448	B12-25	071512	B12-35	071635	B14-47
071389	B12-17	071449	B12-25	071513	B12-35	071636	B14-47
071390	B12-17	071450	B12-25	071514	B12-35	071637	B14-47
071391	B12-17	071451	B12-25	071515	B12-35	071638	B14-47
071392	B12-17	071452	B12-25	071516	B12-35	071639	B14-47
071393	B12-17	071453	B12-25	071517	B12-35	071640	B14-47
071394	B12-17	071454	B12-25	071518	B12-35	071641	B14-47
071395	B12-17	071455	B12-25	071519	B12-35	071650	B14-38
071396	B12-17	071456	B12-25	071520	B12-35	071651	B14-38
071397	B12-17	071457	B12-25	071521	B12-41	071652	B14-38
071398	B12-17	071458	B12-25	071522	B12-41	071653	B14-38
071399	B12-17	071459	B12-25	071523	B12-41	071654	B14-38
071400	B12-17	071460	B12-25	071524	B12-41	071655	B14-38
071401	B12-17	071461	B12-25	071525	B12-41	071656	B14-38
071402	B12-17	071462	B12-25	071526	B12-41	071657	B14-38
071403	B12-17	071463	B12-25	071527	B12-41	071658	B14-38
071404	B12-17	071464	B12-25	071528	B12-41	071659	B14-38
071405	B12-17	071469	B12-35	071576	B14-87	071660	B14-38
071406	B12-17	071470	B12-35	071577	B14-87	071661	B14-38
071407	B12-17	071471	B12-35	071578	B14-87	071662	B14-38
071408	B12-17	071472	B12-35	071579	B14-87	071663	B14-38
071409	B12-17	071473	B12-35	071580	B14-87	071664	B14-38
071410	B12-17	071474	B12-35	071581	B14-87	071665	B14-38
071411	B12-17	071475	B12-35	071582	B14-87	071666	B14-38
071412	B12-17	071476	B12-35	071583	B14-87	071667	B14-38
071413	B12-17	071477	B12-35	071584	B14-87	071668	B14-38
071414	B12-17	071478	B12-35	071585	B14-87	071669	B14-38
071415	B12-17	071479	B12-35	071586	B14-87	071670	B14-38
071416	B12-17	071480	B12-35	071587	B14-87	071671	B14-38
071417	B12-17	071481	B12-35	071590	B14-100	071672	B14-38
071418	B12-17	071482	B12-35	071591	B14-100	071673	B14-38
071419	B12-17	071483	B12-35	071592	B14-101	071674	B14-38
071420	B12-17	071484	B12-35	071593	B14-100	071675	B14-38
071421	B12-17	071485	B12-35	071594	B14-100	071676	B14-38
071422	B12-17	071486	B12-35	071595	B14-101	071677	B14-38
071423	B12-17	071487	B12-35	071610	B14-47	071678	B14-38

PART NUMBER INDEX

Part Number	Page
071679	B14-38
071680	B14-38
071681	B14-38
071682	B14-38
071683	B14-38
071684	B14-38
071685	B14-38
071686	B14-38
071687	B14-38
071688	B14-38
071689	B14-38
071690	B14-38
071691	B14-38
071692	B14-38
071693	B14-38
071694	B14-38
071695	B14-38
071696	B14-38
071697	B14-38
071698	B14-38
071699	B14-38
071700	B14-38
071701	B14-38
071702	B14-38
071703	B14-38
071704	B14-38
071705	B14-38
071706	B14-49
071707	B14-49
071708	B14-49
071709	B14-49
071710	B14-49
071711	B14-49
071712	B14-49
071713	B14-49
071714	B14-49
071715	B14-49
071716	B14-49
071717	B14-49
071718	B14-49
071719	B14-49
071720	B14-49
071721	B14-49
071722	B14-49
071723	B14-49
071724	B14-49
071725	B14-49
071726	B14-49
071727	B14-49
071728	B14-49
071729	B14-49
071730	B14-49
071731	B14-49
071732	B14-49
071733	B14-49
071734	B14-49
071735	B14-49
071736	B14-49
071737	B14-49
071738	B14-49
071739	B14-49
071740	B14-49
071741	B14-49
071790	B12-19
071791	B12-19
071792	B12-19
071793	B12-19
071794	B12-19
071795	B12-19
071796	B12-19
071797	B12-19
071798	B12-19
071799	B12-19
071800	B12-19
071801	B12-19
071802	B12-19
071803	B12-19
071804	B12-19
071805	B12-19
071806	B12-19
071807	B12-19
071808	B12-19
071809	B12-19
071810	B12-19
071811	B12-19
071812	B12-19
071813	B12-19
071814	B12-19
071815	B12-19
071816	B12-19
071817	B12-19
071821	B12-27
071822	B12-27
071823	B12-27
071824	B12-27
071825	B12-27
071826	B12-27
071827	B12-27
071828	B12-27
071832	B12-27
071833	B12-27
071834	B12-27
071835	B12-27
071836	B12-27
071837	B12-27
071838	B12-27
071839	B12-27
071864	B14-41
071865	B14-41
071866	B14-41
071867	B14-41
071868	B14-41
071869	B14-41
071870	B14-41
071871	B14-41
071872	B14-41
071873	B14-41
071874	B14-41
071875	B14-41
071876	B14-41
071877	B14-41
071878	B14-41
071879	B14-41
071880	B14-41
071881	B14-41
071882	B14-41
071883	B14-41
071884	B14-41
071885	B14-41
071886	B14-41
071887	B14-41
071888	B14-41
071889	B14-41
071890	B14-41
071891	B14-41
071892	B14-41
071893	B14-41
071894	B14-41
071895	B14-41
071896	B14-41
071897	B14-41
071898	B14-41
071899	B14-41
071900	B14-41
071901	B14-41
071902	B14-41
071903	B14-41
071904	B14-41
071905	B14-41
071906	B14-51
071907	B14-51
071908	B14-51
071909	B14-51
071910	B14-51
071911	B14-51
071912	B14-51
071913	B14-51
071914	B14-51
071915	B14-51
071916	B14-51
071917	B14-51
071918	B14-51
071919	B14-51
071920	B14-51
071921	B14-51
071922	B14-51
071923	B14-51
071924	B14-51
071925	B14-51
071926	B14-51
071927	B14-51
071928	B14-51
071929	B14-51
071930	B14-51
071931	B14-51
071932	B14-51
071933	B14-51
071934	B14-51
071935	B14-51
071936	B14-51
071937	B14-51
071938	B14-51
071939	B14-51
071940	B12-21
071941	B12-21
071942	B12-21
071943	B12-21
071944	B12-21
071945	B12-21
071946	B12-21
071947	B12-21
071948	B12-21
071949	B12-21
071950	B12-21
071951	B12-21
071952	B12-21
071953	B12-21
071954	B12-21
071955	B12-21
071956	B12-21
071957	B12-21
071958	B12-21
071959	B12-21
071960	B12-21
071961	B12-21
071962	B12-29
071963	B12-29
071964	B12-29
071965	B12-29
071966	B12-29
071967	B12-29
071968	B12-29
071969	B12-29
071970	B12-29
071971	B12-29
071972	B12-29
071973	B12-29
071974	B12-29
071975	B12-29
071976	B12-29
071977	B12-29
071983	B16-12
071984	B16-12
071985	B16-12
071986	B16-12
071987	B16-12
071988	B16-12
071989	B16-12
071990	B16-12
071991	B16-12
071992	B16-12
071993	B16-12
071994	B16-12
071995	B16-12
071996	B16-12
071997	B16-12
071998	B16-12
072000	B14-60
072001	B14-60
072002	B14-60

PART NUMBER INDEX

Part Number	Page	Part Number	Page	Part Number	Page	Part Number	Page
072003	B14-60	072219	B14-79	072281	B14-91	072341	B14-94
072004	B14-60	072220	B14-79	072282	B14-91	072342	B14-94
072005	B14-60	072221	B14-79	072283	B14-91	072343	B14-94
072006	B14-60	072222	B14-79	072284	B14-91	072344	B14-94
072014	B14-60	072223	B14-79	072285	B14-91	072345	B14-94
072015	B14-60	072224	B14-79	072286	B14-91	072346	B14-94
072016	B14-60	072225	B14-79	072287	B14-91	072347	B14-94
072017	B14-60	072226	B14-80	072288	B14-91	072348	B14-94
072018	B14-60	072227	B14-80	072289	B14-91	072349	B14-94
072019	B14-60	072228	B14-80	072290	B14-91	072350	B14-94
072020	B14-60	072229	B14-80	072291	B14-91	072351	B14-94
072170	B14-78	072230	B14-80	072292	B14-91	072352	B14-94
072171	B14-78	072231	B14-80	072293	B14-91	072353	B14-94
072172	B14-78	072232	B14-80	072294	B14-91	072354	B14-94
072173	B14-78	072233	B14-80	072295	B14-91	072355	B14-94
072174	B14-78	072234	B14-80	072296	B14-91	072356	B14-94
072175	B14-78	072235	B14-80	072297	B14-91	072358	B14-94
072176	B14-78	072237	B14-80	072298	B14-91	072359	B14-94
072177	B14-78	072238	B14-80	072299	B14-91	072360	B14-94
072178	B14-78	072239	B14-80	072300	B14-91	072361	B14-94
072179	B14-78	072240	B14-80	072301	B14-91	072362	B14-94
072180	B14-78	072241	B14-80	072302	B14-91	072363	B14-94
072181	B14-78	072242	B14-80	072303	B14-91	072364	B14-94
072182	B14-78	072243	B14-80	072304	B14-91	072365	B14-94
072183	B14-78	072244	B14-80	072305	B14-91	072366	B14-94
072184	B14-79	072245	B14-80	072306	B14-91	072367	B14-94
072185	B14-79	072246	B14-80	072307	B14-91	072368	B14-94
072186	B14-79	072247	B14-80	072308	B14-91	072369	B14-94
072187	B14-79	072248	B14-80	072309	B14-91	072370	B14-94
072188	B14-79	072249	B14-80	072310	B14-91	072371	B14-94
072189	B14-79	072250	B14-80	072311	B14-91	072372	B14-94
072190	B14-79	072251	B14-80	072312	B14-91	072373	B14-94
072191	B14-79	072252	B14-80	072313	B14-91	072374	B14-94
072192	B14-79	072253	B14-80	072314	B14-91	072375	B14-94
072193	B14-79	072254	B14-80	072315	B14-91	072376	B14-94
072194	B14-79	072255	B14-80	072316	B14-91	072377	B14-94
072195	B14-79	072256	B14-80	072317	B14-91	072378	B14-94
072196	B14-79	072257	B14-80	072318	B14-91	072379	B14-94
072197	B14-79	072258	B14-80	072319	B14-91	072380	B14-94
072198	B14-78	072259	B14-80	072320	B14-91	072382	B14-94
072199	B14-78	072260	B14-80	072321	B14-91	072383	B14-94
072200	B14-78	072262	B14-80	072322	B14-91	072384	B14-94
072201	B14-78	072263	B14-80	072323	B14-91	072385	B14-94
072202	B14-78	072264	B14-80	072324	B14-91	072386	B12-37
072203	B14-78	072265	B14-80	072325	B14-91	072387	B12-37
072204	B14-78	072266	B14-80	072326	B14-91	072388	B12-37
072205	B14-78	072267	B14-80	072327	B14-91	072389	B12-37
072206	B14-78	072268	B14-80	072328	B14-91	072390	B12-37
072207	B14-78	072269	B14-80	072329	B14-91	072391	B12-37
072208	B14-78	072270	B14-80	072330	B14-91	072392	B12-37
072209	B14-78	072271	B14-80	072331	B14-91	072393	B12-37
072210	B14-78	072272	B14-80	072332	B14-91	072394	B12-37
072211	B14-78	072273	B14-80	072333	B14-91	072395	B12-37
072212	B14-79	072274	B14-80	072334	B14-91	072396	B12-37
072213	B14-79	072275	B14-80	072335	B14-91	072397	B12-37
072214	B14-79	072276	B14-91	072336	B14-91	072398	B12-37
072215	B14-79	072277	B14-91	072337	B14-91	072399	B12-37
072216	B14-79	072278	B14-91	072338	B14-94	072400	B12-37
072217	B14-79	072279	B14-91	072339	B14-94	072401	B12-37
072218	B14-79	072280	B14-91	072340	B14-94	072402	B12-37

PART NUMBER INDEX

Part Number	Page
072403	B12-37
072404	B12-37
072405	B12-37
072406	B12-37
072407	B12-37
072408	B12-37
072409	B12-37
072410	B12-37
072411	B12-37
072412	B12-37
072413	B12-37
072490	B14-60
072492	B14-60
072500	B14-106
072501	B14-106
072502	B14-106
072503	B12-50, B14-106
072504	B12-50, B14-106
072505	B12-50, B14-106
072506	B12-50, B14-106
072507	B14-106
072508	B12-50, B14-106
072509	B12-50, B14-106
072510	B12-50, B14-106
072511	B14-106
072512	B12-50, B14-106
072513	B12-50, B14-106
072514	B12-50, B14-106
072515	B14-106
072516	B14-106
072517	B14-106
072518	B12-50, B14-106
072519	B14-106
072520	B12-50, B14-106
072521	B14-106
072522	B12-50, B14-106
072523	B12-50, B14-106
072524	B14-106
072525	B14-106
072526	B12-50, B14-106
072527	B14-106
072528	B14-106
072529	B12-50, B14-106
072530	B14-106
072531	B14-106
072532	B12-50
072533	B14-106
072534	B14-106
072535	B12-50
072536	B14-106
072564	B14-60
072565	B14-60
072566	B14-60
072567	B14-60
072572	B14-60
072573	B14-60
072574	B14-60
072575	B14-60
072688	B14-60
072690	B14-60
072692	B14-60
072693	B14-60
072706	B14-60
072708	B14-60
072710	B14-60
072711	B14-60
072742	B14-60
072744	B14-60
072746	B14-60
072747	B14-60
072771	B14-60
072772	B14-60
072786	B14-60
072789	B14-60
072791	B14-60
072792	B14-60
072820	B14-60
072822	B14-60
072831	B14-60
072833	B14-60
072835	B14-60
072836	B14-60
072857	B14-60
072859	B14-60
072895	B14-65, B16-20
072896	B14-65, B16-20
072897	B14-65, B16-20
072898	B14-65, B16-20
072899	B14-65, B16-20
072900	B14-65, B16-20
072901	B14-65, B16-20
072902	B14-65, B16-20
072903	B14-65, B16-20
072904	B14-65, B16-20
072905	B14-65, B16-20
072906	B14-65, B16-20
072907	B14-65, B16-20
072910	B14-60
072911	B14-60
072912	B14-65, B16-20
072913	B14-65, B16-20
072914	B14-65, B16-20
072915	B14-65, B16-20
072916	B14-65, B16-20
072917	B14-65, B16-20
072918	B14-65, B16-20
072919	B14-65, B16-20
072920	B14-65, B16-20
072921	B14-65, B16-20
072922	B14-65, B16-20
072923	B14-65, B16-20
072924	B14-65, B16-20
072954	B14-60
072955	B14-60
072958	B14-60
072959	B14-60
072962	B14-60
072963	B14-60
072966	B14-60
072967	B14-60
073006	B4-100
073007	B2-24
073008	B2-30
073065	B4-100
073069	B6-52
073070	B14-58
073071	B14-58
073072	B6-31
073139	B4-50
073222	B5-28
073224	B2-64
073279	B6-34
073280	B4-100
073282	B4-12
073287	B4-84
073304	B6-22
073332	B6-53
073338	B6-36
073358	B4-24
073381	B4-14
073396	B2-31
073406	B2-54
073416	B4-28
073418	B4-24
073430	B4-72
073479	B6-22
073492	B4-42
073561	B14-56
073562	B14-56
073634	B4-90, B4-94
073638	B2-56
073651	B2-56
073662	B4-34
073669	B4-50
073687	B6-50
073724	B4-16
073753	B6-28
073769	B4-56
073772	B4-100
073793	B4-74
073848	B6-22
073849	B5-28
073850	B5-28
073911	B4-62
073914	B6-22
073924	B6-12
073926	B6-12
073938	B14-58
073950	B4-60
073960	B5-12
073970	B4-70
073992	B4-18
074008	B4-59
074017	B5-34
074115	B14-60
074117	B14-60
074162	B4-12
074163	B6-44
074223	B4-99
074237	B4-100
074254	B6-50
074287	B4-48
074288	B4-48
074308	B6-46
074353	B5-14
074372	B6-42
074381	B4-28
074396	B4-40
074505	B4-88
074512	B2-26
074530	B4-99
074593	B6-12
074613	B14-58
074614	B14-58
074631	B2-26
074632	B2-64
074714	B4-54
074781	B6-34
074782	B6-34
074818	B6-28
074828	B4-99
074867	B14-58
074868	B14-58
074926	B4-24
074935	B4-74
074989	B16-14
075014	B4-90
075020	B4-62
075045	B6-12
075048	B6-16
075049	B6-16
075051	B6-16
075052	B6-16
075096	B2-46
075105	B4-26
075153	B6-46
075154	B16-14
075221	B5-28
075222	B5-28
075248	B2-31
075262	B4-28
075286	B6-51
075306	B14-58
075313	B5-44
075314	B5-44
075329	B4-16
075431	B14-58
075432	B14-58
075444	B14-58
075489	B5-32
075524	B6-54
075546	B3-8
075676	B5-28
075677	B5-28
075679	B5-38
075697	B3-18
075700	B5-36
075714	B4-90, B4-94
075728	B6-54
075765	B4-54

PART NUMBER INDEX

Part Number	Page	Part Number	Page	Part Number	Page	Part Number	Page
075775	B3-21	076058	B3-21	076118	B3-39	076178	B3-24
075792	B5-44	076059	B3-21	076119	B3-39	076179	B3-24
075913	B2-35	076060	B3-21	076120	B3-39	076180	B3-24
076000	B3-8	076061	B3-21	076121	B3-39	076181	B3-28
076001	B3-8	076062	B3-21	076122	B3-39	076182	B3-28
076002	B3-8	076063	B3-23	076123	B3-39	076183	B3-28
076003	B3-8	076064	B3-23	076124	B3-39	076184	B3-28
076004	B3-8	076065	B3-23, B3-24	076125	B3-14	076185	B3-28
076005	B3-8, B3-14	076066	B3-23	076126	B3-14	076186	B3-28
076006	B3-8	076067	B3-23	076127	B3-14	076187	B3-28
076007	B3-8	076068	B3-23	076128	B3-14	076188	B3-26, B3-28
076008	B3-10	076069	B3-23	076129	B3-14	076189	B3-28
076009	B3-10	076070	B3-23	076130	B3-14	076190	B3-34
076010	B3-10	076071	B3-23	076131	B3-14	076191	B3-34
076011	B3-10	076072	B3-23	076132	B3-10, B3-14	076192	B3-34
076012	B3-10	076073	B3-23	076133	B3-10, B3-14	076193	B3-34
076014	B3-10	076074	B3-23	076134	B3-14	076194	B3-34
076015	B3-10	076075	B3-23	076135	B3-10, B3-14	076195	B3-34
076016	B3-10	076076	B3-25	076136	B3-14	076196	B3-36
076017	B3-16	076077	B3-25	076137	B3-14	076197	B3-32, B3-36
076018	B3-16	076078	B3-25	076138	B3-14	076198	B3-36
076019	B3-16	076079	B3-25	076139	B3-14	076199	B3-36
076020	B3-16	076080	B3-25	076140	B3-14	076200	B3-32, B3-36
076021	B3-16	076081	B3-25, B3-28	076141	B3-19	076201	B3-36
076022	B3-16	076082	B3-25	076142	B3-19	076202	B3-36
076023	B3-16	076083	B3-25	076143	B3-19	076203	B3-36
076024	B3-16	076084	B3-26	076144	B3-19	076204	B3-40
076025	B3-16	076085	B3-26	076145	B3-19	076205	B3-40
076026	B3-16	076086	B3-26	076146	B3-19	076206	B3-40
076027	B3-16	076087	B3-26	076147	B3-19	076207	B3-40
076028	B3-16	076088	B3-26	076148	B3-18, B3-19	076208	B3-40
076029	B3-16	076089	B3-26	076149	B3-19	076209	B3-40
076030	B3-16	076090	B3-26	076150	B3-22	076210	B3-40
076031	B3-17	076091	B3-30	076151	B3-22	076211	B3-39, B3-40
076032	B3-17	076092	B3-30	076152	B3-22	076212	B3-40
076033	B3-17	076093	B3-30	076153	B3-22	076213	B3-40
076034	B3-17	076094	B3-30	076154	B3-22	076214	B3-39, B3-40
076035	B3-17	076095	B3-30	076155	B3-22	076215	B3-40
076036	B3-17	076096	B3-30, B3-34	076156	B3-22	076216	B3-40
076037	B3-17	076097	B3-30	076157	B3-21, B3-22	076217	B3-40
076038	B3-17	076098	B3-30	076158	B3-22	076218	B3-40
076039	B3-18	076099	B3-30	076159	B3-22	076219	B3-40
076040	B3-18	076100	B3-32	076160	B3-21, B3-22	076220	B3-8
076041	B3-18	076101	B3-32	076161	B3-22	076221	B3-8
076042	B3-18	076102	B3-32	076162	B3-22	076222	B3-8
076043	B3-18	076103	B3-32	076163	B3-22, B3-23	076223	B3-8
076044	B3-18	076104	B3-32	076164	B3-22	076224	B3-10
076045	B3-18	076105	B3-32	076165	B3-22	076225	B3-10
076046	B3-20	076106	B3-32	076166	B3-24	076226	B3-10
076047	B3-20	076107	B3-32	076167	B3-24	076227	B3-10
076048	B3-20	076108	B3-38	076168	B3-24	076228	B3-10
076049	B3-20	076109	B3-38	076169	B3-24	076229	B3-10
076050	B3-20	076110	B3-38	076170	B3-24	076230	B3-10
076051	B3-20	076111	B3-38	076171	B3-24	076231	B3-16
076052	B3-20	076112	B3-38	076172	B3-24	076232	B3-16
076053	B3-20	076113	B3-38, B3-40	076173	B3-24	076233	B3-16
076054	B3-20	076114	B3-38	076174	B3-24	076234	B3-16
076055	B3-21	076115	B3-38	076175	B3-24	076235	B3-16
076056	B3-21	076116	B3-39, B3-40	076176	B3-23, B3-24	076236	B3-16
076057	B3-21	076117	B3-39	076177	B3-24	076237	B3-16

PART NUMBER INDEX

Part Number	Page
076238	B3-16
076239	B3-17
076240	B3-17
076241	B3-17
076242	B3-17
076243	B3-18
076244	B3-18
076245	B3-18
076246	B3-20
076247	B3-20
076248	B3-20
076249	B3-20
076250	B3-20
076251	B3-21
076252	B3-21
076253	B3-21
076254	B3-21
076255	B3-21
076256	B3-21
076257	B3-23
076258	B3-23
076259	B3-23
076260	B3-23
076261	B3-23
076262	B3-23
076263	B3-23
076264	B3-23
076265	B3-25
076266	B3-25
076267	B3-25
076268	B3-25
076269	B3-26
076270	B3-26
076271	B3-26
076272	B3-26
076273	B3-26
076274	B3-30
076275	B3-30
076276	B3-30
076277	B3-30
076278	B3-30
076279	B3-32
076280	B3-32
076281	B3-32
076282	B3-32
076283	B3-32
076284	B3-32
076286	B3-38
076287	B3-38, B3-40
076288	B3-38
076289	B3-39
076290	B3-39
076291	B3-39
076292	B3-39
076293	B3-39
076294	B3-39
076295	B3-39
076296	B3-14
076297	B3-14
076298	B3-14
076299	B3-14
076300	B3-14
076301	B3-14
076302	B3-14
076303	B3-14
076304	B3-14
076305	B3-14
076306	B3-14
076307	B3-19
076308	B3-19
076309	B3-19
076310	B3-19
076311	B3-19
076312	B3-19
076313	B3-22
076314	B3-22
076315	B3-22
076316	B3-22
076317	B3-22, B3-24
076318	B3-22
076319	B3-22
076320	B3-22
076321	B3-22
076322	B3-22
076323	B3-22
076324	B3-24
076325	B3-24
076326	B3-24
076328	B3-24
076329	B3-24
076330	B3-24
076331	B3-24
076332	B3-24
076333	B3-24
076334	B3-34
076335	B3-34
076336	B3-34
076337	B3-34
076338	B3-34
076339	B3-36
076340	B3-36
076341	B3-36
076342	B3-36
076343	B3-36
076344	B3-40
076346	B3-40
076347	B3-40
076348	B3-40
076349	B3-40
076350	B3-40
076351	B3-40
076352	B3-40
076353	B3-40
076354	B3-40
076410	B3-28
076411	B3-28
076412	B3-28
076413	B3-28
076414	B3-28
076415	B3-28
076416	B3-28
076545	B3-12
076548	B6-22
076558	B4-100
076584	B2-32
076602	B4-38
076608	B6-34
076609	B4-58
076648	B3-22
076649	B3-21
076670	B16-14
076714	B6-16
076763	B5-14
076777	B6-46
076841	B2-56
077192	B10-39
077193	B10-39
077194	B10-39
077195	B10-39
077196	B10-39
077197	B10-39
077198	B10-39
077199	B10-39
077200	B10-39
077201	B10-39
077202	B10-39
077203	B10-39
077204	B10-39
077205	B10-39
077206	B10-39
077207	B10-39
077208	B10-39
077209	B10-39
077210	B10-39
077211	B10-39
077212	B10-39
077213	B10-39
077214	B10-39
077215	B10-39
077216	B10-39
077217	B10-39
077218	B10-39
077219	B10-39
077220	B10-39
077221	B10-34
077222	B10-34
077223	B10-34
077224	B10-34
077225	B10-34
077226	B10-34
077227	B10-34
077228	B10-34
077229	B10-34
077230	B10-34
077231	B10-34
077232	B10-34
077233	B10-34
077234	B10-34
077235	B10-34
077236	B10-34
077237	B10-34
077238	B10-34
077239	B10-34
077240	B10-34
077241	B10-34
077242	B10-34
077243	B10-34
077244	B10-34
077245	B10-34
077246	B10-34
077247	B10-34
077248	B10-34
077249	B10-34
077250	B10-34
077251	B10-34
077252	B10-34
077253	B10-34
077254	B10-34
077255	B10-34
077256	B10-34
077257	B10-34
077258	B10-34
077259	B10-34
077260	B10-34
077261	B10-34
077262	B10-34
077263	B10-34
077264	B10-34
077265	B10-34
077266	B10-34
077267	B10-36
077268	B10-36
077269	B10-36
077270	B10-36
077271	B10-36
077272	B10-36
077273	B10-36
077274	B10-36
077275	B10-36
077276	B10-36
077277	B10-36
077278	B10-36
077279	B10-36
077280	B10-36
077281	B10-36
077282	B10-36
077283	B10-36
077284	B10-36
077285	B10-36
077286	B10-36
077287	B10-36
077288	B10-36
077289	B10-36
077290	B10-36
077291	B10-36
077292	B10-36
077293	B10-36
077294	B10-36
077295	B10-36
077296	B10-36

PART NUMBER INDEX

Part Number	Page	Part Number	Page	Part Number	Page	Part Number	Page
077297	B10-36	079993	B16-17	089035	B19-37	104022	B11-36
077298	B10-36	087172	B11-9	089036	B19-37	104023	B11-36
077299	B10-36	087178	B11-9	089037	B19-37	104024	B11-36
077300	B10-36	087180	B11-9	089038	B19-37	104025	B11-36
077416	B5-12	087181	B11-9	089039	B19-37	104026	B11-36
077417	B5-12	087182	B11-9	089040	B19-37	104027	B11-36
077418	B3-16	087183	B11-9	089041	B19-37	104028	B11-36
077453	B3-12	087184	B11-9	089042	B19-37	104029	B11-36
077458	B14-58	087185	B11-9	089043	B19-37	104030	B11-36
077462	B3-26	087186	B11-9	089044	B19-37	104031	B11-36
077471	B5-18	087187	B11-9	089045	B19-37	104032	B11-36
077473	B14-58	087188	B11-11	089046	B19-37	104033	B11-36
077481	B16-14	087189	B11-11	089047	B19-37	104034	B11-36
077561	B14-58	087190	B11-11	089048	B19-37	104035	B11-36
077646	B14-56	087191	B11-11	089150	B19-37	104036	B11-36
077647	B14-56	087192	B11-11	089151	B19-37	104037	B11-36
077648	B14-56	087193	B11-11	089152	B19-37	104038	B11-36
077649	B14-56	087194	B11-14	089153	B19-37	104039	B11-36
077650	B14-56	087195	B11-14	089154	B19-37	104040	B11-13
077651	B14-56	087196	B11-14	089155	B19-37	104041	B11-13
077652	B14-58	087197	B11-14	089156	B19-37	104042	B11-13
077660	B14-58	087198	B11-14	089600	B19-37	104043	B11-13
077661	B14-58	087199	B11-14	089601	B19-37	104044	B11-13
077662	B14-58	087200	B11-14	089602	B19-37	104045	B11-13
077773	B3-18	087205	B11-14	089603	B19-37	104046	B11-13
077777	B4-26	087207	B11-14	089604	B19-37	104050	B11-13
077897	B14-58	087209	B11-14	089782	B19-15	104051	B11-13
077921	B4-97	087210	B11-14	089783	B19-15	104052	B11-13
077923	B4-97	087211	B11-14	089784	B19-15	104053	B11-13
077940	B4-97	087212	B11-14	089785	B19-15	104054	B11-13
077941	B4-97	087215	B11-14	089786	B19-15	104055	B11-13
077942	B4-97	087218	B11-14	089787	B19-15	104056	B11-13
077943	B4-97	087220	B11-14	089788	B19-15	104078	B11-13
077944	B4-97	087221	B11-14	089789	B19-15	104090	B11-13
077945	B4-97	087222	B11-14	089790	B19-15	104106	B11-13
077946	B4-97	087224	B11-14	089791	B19-15	104119	B11-13
077947	B4-97	087225	B11-14	089792	B19-15	104160	B11-36
077948	B4-97	087262	B11-9	089793	B19-15	104161	B11-36
077949	B4-97	087263	B11-9	089794	B19-15	104162	B11-36
077950	B4-97	087264	B11-9	089795	B19-15	104164	B11-36
077957	B4-97	087265	B11-9	089796	B19-15	104169	B11-36
077958	B4-97	087266	B11-9	089797	B19-15	104170	B11-36
077959	B4-97	087267	B11-9	089798	B19-15	104172	B11-36
077960	B4-97	087268	B11-9	089799	B19-15	104173	B11-36
077976	B4-97	087269	B11-9	089800	B19-15	104176	B11-36
077977	B4-97	089020	B19-37	089801	B19-15	104177	B11-36
077978	B4-97	089021	B19-37	089802	B19-15	104181	B11-36
077979	B4-97	089022	B19-37	089803	B19-15	104195	B11-36
077980	B4-97	089023	B19-37	089804	B19-15	104196	B11-36
077981	B4-97	089024	B19-37	093733	B4-36	104197	B11-36
077982	B4-97	089025	B19-37	104003	B11-36	104199	B11-36
077983	B4-97	089026	B19-37	104006	B11-36	104204	B11-36
077984	B4-97	089027	B19-37	104010	B11-36	104205	B11-36
077985	B4-97	089028	B19-37	104013	B11-36	104207	B11-36
077986	B4-97	089029	B19-37	104016	B11-36	104208	B11-36
077993	B4-97	089030	B19-37	104017	B11-36	104211	B11-36
077995	B4-97	089031	B19-37	104018	B11-36	104212	B11-36
077996	B4-97	089032	B19-37	104019	B11-36	104216	B11-36
079991	B16-17	089033	B19-37	104020	B11-36	123069	B2-42
079992	B16-17	089034	B19-37	104021	B11-36	123070	B2-42

PART NUMBER INDEX

Part Number	Page
123071	B2-42
123072	B2-42
123073	B2-42
123074	B2-42
123075	B2-42
123076	B2-42
123077	B2-42
123170	B4-12
123171	B4-20
123172	B4-34
123173	B4-54
123174	B4-70
123175	B4-74
123176	B4-86
123177	B4-87
123183	B4-16
123184	B4-38
123234	B2-42
123235	B8-24
123326	B4-90
123328	B4-88, B4-97
123329	B4-88, B4-97
123330	B4-88
123331	B4-88
123332	B4-88
123333	B4-88
123334	B4-88
123335	B4-88
123336	B4-88
123337	B4-88
123338	B4-88
123339	B4-88, B4-94
123340	B4-88
123341	B4-88
123342	B4-90, B4-94
123343	B4-90
123344	B4-90
123345	B4-90
123346	B4-90
123347	B4-90
123348	B4-90
123349	B4-90
123350	B4-90
123352	B4-90
123353	B4-94
123354	B4-94
123355	B4-94
123356	B4-94
123357	B4-94
123358	B4-90, B4-94
123359	B4-94
123360	B4-90, B4-94
123361	B4-94
123362	B4-90, B4-94
123363	B4-94
123364	B4-94
123365	B4-94
123366	B4-94
123367	B4-94
123368	B4-88
123409	B2-42
123413	B2-42
123419	B4-94
123420	B4-94
123460	B2-42
123469	B4-88
123580	B8-8
123581	B8-8
123582	B8-8
123583	B8-10
123584	B8-10
123585	B8-10
123586	B8-10
123587	B8-10
123588	B8-10
123589	B4-20, B8-8
123590	B8-8
123593	B8-10
123595	B8-12
123596	B8-12
123597	B8-12
123598	B8-12
123599	B8-12
123600	B8-12
123601	B8-12
123602	B8-12
123603	B8-12
123604	B8-8
123605	B8-12
123606	B8-8
123607	B8-12
123610	B8-14
123611	B8-14
123612	B8-14
123613	B8-14
123614	B8-14
123615	B8-14
123616	B8-14
123617	B8-14
123618	B8-14
123619	B8-14
123625	B8-16
123626	B8-16
123627	B8-16
123628	B8-16
123629	B8-16
123630	B8-16
123631	B8-16
123632	B8-16
123633	B8-16
123634	B8-16
123636	B4-14
123652	B8-16
123680	B8-18
123693	B4-22
123694	B8-14
123725	B4-16, B4-22
123727	B4-20
123728	B4-14
123730	B4-38
123731	B4-38
123732	B4-38
123733	B4-38, B4-44
123734	B4-38
123735	B4-39
123736	B4-39
123737	B4-39
123738	B4-39
123740	B4-58
123741	B4-58
123742	B4-58
123743	B4-58, B4-62
123744	B4-58
123745	B4-58
123746	B4-59
123747	B4-59
123748	B4-59
123749	B4-59
123750	B4-59
123751	B4-59
123753	B4-12
123754	B4-12
123755	B4-44
123756	B4-44
123757	B4-44
123758	B4-44
123760	B4-62
123761	B4-62
123762	B4-62
123763	B4-62
123764	B4-62
123765	B4-62
123766	B4-62
123767	B4-62
123768	B4-62
123769	B4-62
123781	B4-12
123782	B4-14
123783	B4-14
123784	B4-14
123790	B4-16
123792	B4-12
123793	B4-14
123803	B4-12
123804	B4-12
123805	B4-12
123806	B4-12
123807	B4-12
123808	B4-12
123809	B4-12
123810	B4-12, B4-24, B4-26
123811	B4-12
123812	B4-12
123813	B4-12
123814	B4-14
123815	B4-14
123816	B4-14
123817	B4-14
123818	B4-14
123819	B4-14
123820	B4-14
123821	B4-14
123822	B4-14
123823	B4-14
123824	B4-12
123828	B4-12
123829	B4-14
123830	B4-12, B4-20
123831	B4-12, B4-20
123835	B4-12
123836	B4-12
123839	B4-14
123854	B4-20
123855	B4-20
123856	B4-20
123857	B4-20
123858	B4-20
123860	B4-20
123861	B4-20
123862	B4-20
123863	B4-20
123864	B4-20
123865	B4-20
123866	B4-20
123867	B4-20
123868	B4-20
123869	B4-20
123870	B4-20
123871	B4-20
123872	B4-20
123873	B4-20
123874	B4-20
123875	B4-20
123877	B4-12
123878	B4-12
123879	B4-12
123894	B4-12
123903	B4-16
123904	B4-16
123905	B4-16
123906	B4-16
123907	B4-16, B4-28
123908	B4-16
123909	B4-18
123910	B4-18
123911	B4-18
123912	B4-18
123913	B4-18
123914	B4-18
123915	B4-18
123916	B4-16
123918	B4-22
123919	B4-16
123932	B4-12
123933	B4-12, B4-26
123936	B4-22
123938	B4-22
123939	B4-14
123958	B4-16, B4-22
123959	B4-22

PART NUMBER INDEX

Part Number	Page	Part Number	Page	Part Number	Page	Part Number	Page
123960	B4-22	124240	B4-86	124446	B4-50	124640	B4-46
123961	B4-22	124242	B4-86	124447	B4-50	124641	B4-46
123962	B4-22	124244	B4-38	124448	B4-50	124642	B4-46
123963	B4-22	124245	B4-86	124450	B4-50	124643	B4-46
123964	B4-22	124246	B4-58	124460	B4-32	124644	B4-46
123965	B4-22	124250	B4-87	124461	B4-32	124645	B4-46
123966	B4-22	124251	B4-87	124462	B4-32	124646	B4-46
123987	B4-14	124253	B4-87	124463	B4-32	124647	B4-46
124034	B4-36	124256	B4-34	124464	B4-32	124648	B4-46
124048	B4-54	124261	B4-56	124465	B4-32	124649	B4-46
124049	B4-54	124268	B4-36	124466	B4-32	124650	B4-46
124098	B4-54	124269	B4-36	124467	B4-32	124651	B4-46
124099	B4-54	124270	B4-36	124468	B4-32	124652	B4-46
124100	B4-54	124274	B4-34	124469	B4-32	124653	B4-46
124101	B4-54	124275	B4-34	124470	B4-32	124660	B4-46
124102	B4-54	124276	B4-34, B4-42	124471	B4-32	124661	B4-46
124103	B4-54	124277	B4-34	124472	B4-32	124662	B4-46
124148	B4-87	124278	B4-34	124473	B4-32	124663	B4-46
124149	B4-87	124279	B4-36	124474	B9-12	124664	B4-46
124166	B4-34	124280	B4-36	124478	B4-32	124665	B4-46
124167	B4-34	124282	B4-36	124479	B4-32	124666	B4-46
124170	B4-34	124290	B4-84	124480	B4-32	124667	B4-46
124171	B4-34	124291	B4-84	124567	B4-54	124668	B4-46
124172	B4-34	124292	B4-84	124578	B4-66	124669	B4-46
124173	B4-34	124293	B4-84	124579	B4-66	124670	B4-46
124174	B4-34	124299	B4-84	124582	B4-66	124671	B4-46
124175	B4-34	124373	B4-36	124587	B4-66	124672	B4-46
124176	B4-34	124393	B4-86	124590	B9-22	124673	B4-46
124198	B4-34	124394	B4-87	124591	B9-22	124676	B9-18
124199	B4-34	124395	B4-59	124600	B4-52	124677	B9-18
124204	B4-54	124404	B4-84	124601	B4-52	124678	B9-18
124205	B4-54	124405	B4-84	124602	B4-52	124697	B9-18
124206	B4-54, B4-60	124406	B4-84	124603	B4-52	124729	B4-66
124207	B4-54	124408	B4-84	124604	B4-52	124748	B9-18
124208	B4-54	124409	B4-84	124605	B4-52	124749	B9-18
124209	B4-56	124410	B4-34	124606	B4-52	124785	B4-34
124210	B4-56	124411	B4-34	124607	B4-52	124794	B4-39
124211	B4-56	124412	B4-36	124608	B4-52	124872	B4-18
124212	B4-56	124413	B4-36	124609	B4-52	124931	B2-42
124213	B4-56	124419	B4-84	124610	B4-52	124932	B2-42
124214	B4-56	124420	B4-86	124611	B4-52	124933	B8-10
124215	B4-56	124421	B4-86	124612	B4-52	124934	B4-52
124216	B4-56	124422	B4-86	124613	B4-52	124941	B4-20
124217	B4-56	124423	B4-86	124614	B4-34	124942	B4-36
124218	B4-54	124424	B4-86	124618	B4-34	124943	B4-20
124219	B4-54	124427	B4-87	124620	B4-52	124944	B4-20
124220	B4-56	124428	B4-87	124621	B4-52	124996	B4-84
124224	B4-66, B4-68	124429	B4-87	124622	B4-52	125004	B2-42
124225	B4-66	124430	B4-87	124623	B4-52	125005	B2-42
124226	B4-66	124435	B4-50	124624	B4-52	125010	B4-74
124227	B4-66	124436	B4-50	124625	B4-52	125011	B4-74
124228	B4-66	124437	B4-50	124626	B4-52	125012	B4-74
124229	B4-66	124438	B4-50	124627	B4-52	125050	B4-70
124230	B4-66	124439	B4-50	124628	B4-52	125051	B4-70
124231	B4-66	124440	B4-50	124629	B4-52	125052	B4-70
124232	B4-66	124441	B4-50	124630	B4-52	125054	B4-70
124233	B4-66	124442	B4-50	124631	B4-52	125071	B4-76
124235	B4-66	124443	B4-50	124632	B4-52	125113	B4-74
124236	B4-66	124444	B4-50	124633	B4-52	125114	B4-74
124237	B4-66	124445	B4-50	124634	B9-22	125115	B4-76

PART NUMBER INDEX

Part Number	Page
125116	B4-76
125117	B4-76
125118	B4-76
125119	B4-76
125120	B4-74
125121	B4-76
125151	B4-76
125153	B4-70
125154	B4-70, B4-73
125155	B4-70
125156	B4-72
125157	B4-72
125158	B4-72
125159	B4-72
125160	B4-72
125162	B4-72
125169	B4-14, B4-26
125170	B4-56, B4-60
125171	B4-36, B4-42
125328	B4-70
125329	B4-70
125343	B4-74
125344	B4-74
125355	B4-74
125356	B4-74
125357	B4-74
125358	B4-74
125359	B4-74
125360	B4-74, B4-78
125361	B4-74
125362	B4-76
125363	B4-76
125364	B4-76
125365	B4-70
125366	B4-70
125367	B4-70
125368	B4-70
125369	B4-70
125370	B4-72
125371	B4-72
125372	B4-72
125373	B4-72
125378	B4-70
125384	B4-52
125500	B8-8, B8-12
125501	B8-8, B8-12
125502	B8-8
125503	B8-8
125504	B8-8
125505	B8-10
125506	B8-10
125507	B8-12
125508	B8-12
125509	B8-12
125510	B8-12
125511	B8-12
125512	B8-12
125513	B8-8
125514	B8-8
125515	B8-8
125516	B8-14
125517	B8-14
125518	B8-14
125519	B8-14
125520	B8-14
125521	B8-14
125522	B8-14
125523	B8-14
125524	B8-16
125525	B8-16
125526	B8-16
125527	B8-16
125528	B8-16
125529	B8-16, B9-16
125530	B8-16
125531	B8-16
125533	B8-18
125534	B8-18
125535	B8-18
125536	B8-18
125537	B8-18
125538	B8-18
125539	B8-18
125540	B8-18
125541	B8-18
125542	B8-18
125543	B8-18
125544	B8-18
125545	B8-18
125546	B8-18
125547	B8-18
125548	B8-18
125549	B8-20
125550	B8-20
125551	B8-20
125552	B8-20
125553	B8-20
125554	B8-20
125555	B8-20
125556	B8-20
125557	B8-20
125558	B8-20
125559	B8-22
125560	B8-22
125561	B8-22
125562	B8-22
125563	B8-22
125564	B8-22
125565	B8-22
125625	B7-40
125626	B7-40
125627	B7-40
125628	B7-40
125629	B7-40
125630	B7-40
125631	B7-40
125632	B7-40
125633	B7-40
125634	B7-40
125635	B7-40
125636	B4-97, B8-24
125637	B8-24
125638	B8-24
125639	B8-24
125640	B8-24
125641	B8-24
125642	B8-24
125643	B8-24
125644	B9-34
125645	B9-34
125646	B9-34
125647	B9-34
125648	B9-34
125649	B9-34
125650	B9-34
125651	B9-34
125652	B9-34
125655	B7-12
125656	B7-12
125657	B7-12
125658	B7-12
125659	B7-12
125660	B7-18
125661	B7-14
125662	B7-14
125663	B7-14
125664	B7-14
125665	B7-14
125666	B7-28
125667	B7-28
125668	B7-28
125669	B7-28
125670	B7-28
125671	B7-28
125672	B7-28
125673	B7-28
125674	B7-28
125675	B7-28
125676	B7-28
125677	B7-24
125678	B7-24
125679	B7-24
125680	B7-24
125681	B7-24
125682	B7-24
125683	B7-24
125684	B7-24
125685	B8-8
125686	B8-8
125687	B8-8
125688	B8-8
125689	B8-10
125690	B8-12
125691	B8-10
125692	B8-10
125693	B8-10
125694	B8-16
125695	B8-16
125696	B8-16
125697	B8-16
125698	B8-16
125699	B8-16
125700	B8-16
125701	B8-16
125702	B8-16
125703	B8-14
125704	B8-14
125705	B8-14
125706	B8-14
125707	B8-14
125708	B8-14
125709	B8-14
125710	B8-14
125711	B9-6
125712	B9-6
125713	B9-6
125714	B9-6
125715	B9-6
125716	B9-10
125717	B9-8
125718	B9-8
125719	B9-8
125720	B9-24
125721	B9-24
125722	B9-24
125723	B9-24
125724	B9-24
125725	B9-24
125726	B9-24
125727	B9-24
125728	B9-24
125730	B9-16
125731	B9-16
125732	B9-16
125733	B9-16
125734	B9-16
125735	B9-16
125736	B9-16
125737	B9-16
125751	B8-8
125752	B8-14
125760	B4-20
125768	B4-20
125800	B4-88, B4-97
125802	B4-88
125804	B4-88
125806	B4-88
125808	B4-88
125810	B4-90
125812	B4-90
125814	B4-90
125816	B4-90
125818	B4-90
125820	B4-90
125822	B4-90
125825	B4-94
125826	B4-94
125828	B4-94
125830	B4-94
125832	B4-94

PART NUMBER INDEX

Part Number	Page
125834	B4-94
125836	B4-94
125838	B4-94
125840	B4-94
125842	B4-94
125844	B4-94
125850	B4-12
125851	B4-12
125852	B4-12
125853	B4-12
125854	B4-12
125855	B4-12
125856	B4-20
125857	B4-14
125858	B4-14
125859	B4-14
125860	B4-14
125861	B4-14
125862	B4-14
125865	B4-66
125866	B4-66
125867	B4-66
125868	B4-66
125869	B4-66
125870	B4-66
125871	B4-66
125872	B4-66
125873	B2-42
125874	B2-42
125875	B4-34
125876	B4-34
125877	B4-34
125878	B4-34
125879	B4-34
125880	B4-36
125881	B4-36
125882	B4-36
125885	B4-54
125886	B4-54
125887	B4-54
125888	B4-54
125889	B4-54
125890	B4-56
125891	B4-56
125892	B4-56
125893	B4-56
125894	B4-56
125895	B4-56
125896	B4-56
125900	B4-70
125901	B4-70
125902	B4-70
125903	B4-70
125904	B4-72
125905	B4-72
125906	B4-72
125907	B4-72
125908	B4-72
125910	B4-74
125911	B4-74
125912	B4-74
125913	B4-74
125914	B4-74
125915	B4-76
125916	B4-76
125917	B4-76
125918	B4-76
125919	B4-76
125925	B4-24, B4-26
125926	B4-24, B4-26
125927	B4-24
125928	B4-26
125929	B4-24, B4-26
125930	B4-24, B4-26
125931	B4-24, B4-26
125932	B4-26
125933	B4-26
125934	B4-26
125935	B4-26
125937	B4-26
125940	B4-68
125941	B4-68
125942	B4-68
125943	B4-68
125944	B4-68
125945	B4-68
125946	B4-68
125947	B4-68
125948	B4-68
125949	B4-68
125954	B4-42
125955	B4-42
125956	B4-42
125957	B4-42
125958	B4-42
125960	B4-42
125965	B4-60
125966	B4-60
125967	B4-60
125968	B4-60
125969	B4-60
125970	B4-60
125971	B4-60
125972	B4-60
125973	B4-60
125974	B4-60
125975	B4-60
125980	B4-73
125981	B4-73
125982	B4-73
125983	B4-73
125984	B4-73
125985	B4-73
125986	B4-73
125989	B4-78
125990	B4-78
125991	B4-78
125992	B4-78
125993	B4-78
125994	B4-80
125995	B4-80
125996	B4-80
125997	B4-80
125998	B4-80
126042	B4-36
126049	B4-84
126102	B4-34
126110	B4-28
126112	B4-28
126121	B5-50
126147	B4-24, B4-26
126148	B4-26
126167	B4-68
126168	B4-68
126170	B4-68
126171	B4-68
126172	B4-68
126173	B4-68
126174	B4-68
126175	B4-66, B4-68
126176	B4-68
126177	B4-66, B4-68
126178	B4-68
126179	B4-66, B4-68
126180	B4-68
126182	B4-68
126183	B4-68
126184	B4-68
126186	B4-60
126187	B4-60
126188	B4-60
126189	B4-60
126190	B4-60
126191	B4-60
126192	B4-56, B4-60
126193	B4-60
126194	B4-60
126195	B4-56, B4-60
126196	B4-60
126197	B4-60
126198	B4-60
126199	B4-60
126226	B4-60
126227	B4-60
126270	B4-60
126283	B4-56, B4-60
126284	B4-42
126285	B4-42
126287	B4-42
126288	B4-42
126289	B4-42
126290	B4-42
126292	B4-42
126293	B4-36, B4-42
126405	B4-24
126406	B4-24
126407	B4-24
126408	B4-24
126409	B4-24
126415	B7-20
126416	B7-20
126417	B7-20
126418	B7-20
126419	B7-20
126450	B6-16
126451	B6-16
126452	B6-16
126453	B6-16
126454	B6-16
126475	B7-42
126476	B7-42
126477	B7-42
126478	B7-42
126479	B7-42
126480	B6-56
126481	B6-56
126482	B6-56
126483	B6-56
126484	B6-56
126485	B6-56
126486	B6-56
126487	B6-56
126488	B6-56
126489	B6-56
126495	B4-92
126496	B4-92
126497	B4-92
126498	B4-92
126499	B4-92
126500	B4-12
126502	B4-12
126503	B4-12
126504	B4-12
126505	B4-12
126510	B4-14
126513	B4-14
126516	B4-34
126518	B4-34, B4-42
126519	B4-34
126521	B4-36
126522	B4-36
126523	B4-36
126524	B4-54
126525	B4-54
126526	B4-54
126528	B4-54, B4-60
126531	B4-56
126533	B4-26
126534	B4-26
126535	B4-26
126536	B4-42
126537	B4-56, B4-60
126538	B4-60
126539	B4-60
126540	B4-60
126541	B4-60
126544	B4-72
126547	B4-14, B4-26
126548	B4-14
126601	B6-10

PART NUMBER INDEX

Part Number	Page
126602	B6-10
126603	B6-10
126604	B6-10
126605	B6-10, B6-14
126606	B6-10
126607	B6-10
126608	B6-10
126609	B6-10
126610	B6-10
126611	B6-26
126612	B6-26
126613	B6-26
126614	B6-26
126615	B6-26
126616	B6-26
126617	B6-26
126618	B6-26
126619	B6-34
126620	B6-34
126621	B6-34
126622	B6-34
126623	B6-34
126624	B6-34
126625	B6-34
126626	B6-34
126627	B6-34
126628	B6-34
126629	B2-43, B6-54
126630	B2-43, B6-54
126631	B2-43, B6-54
126632	B2-43, B6-54
126633	B2-43, B6-54
126634	B2-43, B6-54
126635	B2-43, B6-54
126636	B6-54
126637	B6-54
126638	B6-54
126639	B6-16, B6-18
126640	B6-18
126641	B6-30
126642	B6-36
126643	B6-36
126644	B6-58
126645	B6-58
126646	B6-28
126647	B6-28
126648	B6-28
126649	B6-28
126650	B6-28
126651	B6-28
126652	B6-28
126653	B6-38
126654	B6-38
126655	B6-38
126656	B6-38
126657	B6-38
126658	B6-38
126659	B6-38
126660	B6-40
126661	B6-38
126685	B2-43, B6-54
126686	B2-43, B6-54
126687	B2-43, B6-54
126688	B2-43, B6-54
126689	B2-43, B6-54
126690	B2-43, B6-54
126691	B2-43, B6-54
126692	B2-43, B6-54
126693	B2-43, B6-54
126694	B2-43, B6-54
126695	B2-43, B6-54
126696	B2-43, B6-54
126697	B2-43, B6-54
126698	B2-43, B6-54
126699	B2-43, B6-54
126810	B4-24, B4-26
126811	B4-26
126812	B4-24, B4-26
126813	B4-24, B4-26
126814	B4-24, B4-26
126815	B4-14, B4-24, B4-26
126816	B4-24, B4-26
126817	B4-14, B4-24, B4-26
126818	B4-24, B4-26
126819	B4-14, B4-26
126820	B4-26
126821	B4-26
126822	B4-26
126823	B4-26
126824	B4-26
126835	B4-28
126836	B4-28
126837	B4-28
126838	B4-28
126839	B4-28
126840	B4-28
126841	B4-28
126842	B4-28
126843	B4-28
126844	B4-28
126847	B4-18, B4-28
126855	B4-26
126856	B4-26
126857	B4-26
127073	B2-42
127500	B2-46
127501	B2-46
127502	B2-46
127503	B2-46
127504	B2-46
127505	B2-46
127506	B2-46
127507	B2-46
127508	B2-46
127509	B2-51
127510	B2-51
127511	B2-51
127512	B2-51
127513	B2-51
127514	B2-51
127515	B2-64
127516	B2-64
127517	B2-64
127518	B2-64
127519	B2-64
127520	B2-64
127521	B2-59, B2-64
127522	B2-59, B2-64
127523	B2-59, B2-64
127524	B2-56
127525	B2-56
127526	B2-56
127527	B2-56
127528	B2-56
127529	B2-56
127530	B2-56
127531	B2-56
127532	B2-56
127533	B2-59
127534	B2-59
127535	B2-59
127536	B2-59
127537	B2-59
127538	B2-59
127545	B2-46
127546	B2-46
127547	B2-46
127548	B2-46
127549	B2-46
127550	B2-46
127551	B2-46
127552	B2-51
127553	B2-51
127554	B2-51
127555	B2-51
127556	B2-64
127557	B2-64
127558	B2-64
127559	B2-64
127560	B2-64
127561	B2-64
127562	B2-64
127563	B2-56
127564	B2-56
127565	B2-56
127566	B2-56
127567	B2-56
127568	B2-56
127569	B2-56
127570	B2-59
127578	B2-48
127579	B2-48
127580	B2-48
127581	B2-48
127582	B2-48
127583	B2-48
127584	B2-48
127585	B2-48
127586	B2-48
127587	B2-52
127588	B2-52
127589	B2-52
127590	B2-52
127591	B2-52
127592	B2-52
127593	B2-65
127594	B2-65
127595	B2-65
127596	B2-65
127597	B2-65
127598	B2-65
127599	B2-65
127600	B2-65
127601	B2-65
127602	B2-57
127603	B2-57
127604	B2-57
127605	B2-57
127606	B2-57
127607	B2-57
127608	B2-57
127609	B2-57
127610	B2-57
127611	B2-60
127612	B2-60
127613	B2-60
127614	B2-60
127615	B2-60
127616	B2-60
127617	B2-70
127618	B2-70
127619	B2-70
127620	B2-70
127621	B2-70
127622	B2-70
127623	B2-48
127624	B2-48
127625	B2-48
127626	B2-48
127627	B2-48
127628	B2-48
127629	B2-48
127630	B2-52
127631	B2-52
127632	B2-52
127633	B2-52
127634	B2-65
127635	B2-65
127636	B2-65
127637	B2-65
127638	B2-65
127639	B2-65
127640	B2-65
127641	B2-57
127642	B2-57
127643	B2-57
127644	B2-57
127645	B2-57
127646	B2-57
127647	B2-57

PART NUMBER INDEX

Part Number	Page
127648	B2-60
127649	B2-60
127650	B2-60
127651	B2-60
127652	B2-70
127653	B2-70
127654	B2-70
127655	B2-70
127670	B2-26
127671	B2-26
127672	B2-26
127673	B2-26
127674	B2-26
127675	B2-26
127676	B2-26
127677	B2-26
127678	B2-26
127679	B2-26
127680	B2-26
127681	B2-31
127682	B2-31
127683	B2-31
127684	B2-31
127685	B2-31
127686	B2-31
127687	B2-31
127688	B2-31
127689	B2-36
127690	B2-36
127691	B2-36
127692	B2-36
127693	B2-36
127694	B2-36
127695	B2-36
127696	B2-36
127697	B2-26
127698	B2-26
127699	B2-26
127700	B2-26
127701	B2-26
127702	B2-26
127703	B2-31
127704	B2-31
127705	B2-31
127706	B2-31
127707	B2-31
127708	B2-31
127709	B2-36
127710	B2-36
127711	B2-36
127712	B2-36
127713	B2-36
127714	B2-36
127715	B2-28
127716	B2-28
127717	B2-28
127718	B2-28
127719	B2-28
127720	B2-28
127721	B2-28
127722	B2-28
127723	B2-32
127724	B2-32
127725	B2-32
127726	B2-32
127727	B2-32
127728	B2-32
127729	B2-32
127730	B2-32
127731	B2-37
127732	B2-37
127733	B2-37
127734	B2-37
127735	B2-37
127736	B2-37
127737	B2-37
127738	B2-37
127739	B2-28
127740	B2-28
127741	B2-28
127742	B2-28
127743	B2-28
127744	B2-28
127745	B2-32
127746	B2-32
127747	B2-32
127748	B2-32
127749	B2-32
127750	B2-32
127751	B2-37
127752	B2-37
127753	B2-37
127754	B2-37
127755	B2-37
127756	B2-37
127804	B1-34
127808	B1-34
127818	B1-34
127819	B1-34
127820	B1-34
127821	B1-34
127822	B1-34
127823	B1-34
127824	B1-34
127825	B1-34
127826	B1-34
127861	B1-34
127862	B1-34
127863	B1-34
127864	B1-34
127865	B1-34
127866	B1-34
127867	B1-34
128082	B4-53
128083	B4-53
128084	B4-53
128085	B4-53
128086	B4-53
128087	B4-53
128088	B4-64
128089	B4-64
128090	B4-64
128091	B4-64
128092	B4-48
128093	B4-48
128094	B4-48
128095	B4-48
128096	B4-48
128097	B4-48
128106	B4-30
128107	B4-30
128108	B4-30
128109	B4-30
128110	B4-30
128111	B4-30
128130	B9-14
128131	B9-14
128132	B9-14
128133	B9-14
128134	B9-14
128135	B9-14
128136	B9-14
128137	B9-19
128138	B9-19
128139	B9-19
128140	B9-19
128141	B9-19
128142	B9-19
128143	B9-19
128144	B9-23
128145	B9-23
128146	B9-23
128147	B9-23
128148	B9-23
128149	B9-23
128150	B9-23
128151	B4-48
128154	B4-48
128170	B4-30
128171	B4-30
128172	B4-30
128173	B4-30
128174	B4-48
128175	B4-48
128176	B4-48
128177	B4-48
128178	B4-53
128179	B4-53
128180	B4-53
128181	B4-53
128182	B4-64
128183	B9-14
128184	B9-14
128185	B9-14
128186	B9-19
128187	B9-19
128188	B9-19
128189	B9-23
128190	B9-23
128191	B9-23
128192	B9-26
128193	B9-26
128194	B9-26
128195	B9-26
128196	B9-26
128197	B4-30
128200	B4-106, B5-74, B6-66, B7-48
128201	B4-108, B5-76, B6-68, B7-50
128202	B4-106, B5-74, B6-66, B7-48
128203	B4-108, B5-76, B6-68, B7-50
128204	B4-106, B5-74, B6-66, B7-48
128205	B4-108, B5-76, B6-68, B7-50
128206	B4-106, B5-74, B6-66, B7-48
128207	B4-108, B5-76, B6-68, B7-50
128208	B4-106, B5-74, B6-66, B7-48
128209	B4-108, B5-76, B6-68, B7-50
128210	B4-106, B5-74, B6-66, B7-48
128211	B4-108, B5-76, B6-68, B7-50
128212	B4-106, B5-74, B6-66, B7-48
128213	B4-108, B5-76, B6-68, B7-50
128214	B4-106, B5-74, B6-66, B7-48
128215	B4-108, B5-76, B6-68, B7-50
128216	B4-106, B5-74, B6-66, B7-48
128217	B4-108, B5-76, B6-68, B7-50
128218	B4-106, B5-74, B6-66, B7-48
128219	B4-108, B5-76, B6-68, B7-50
128220	B6-70
128221	B6-70
128222	B6-70
128223	B6-70
128277	B3-41, B4-103, B5-71, B6-63, B7-45
128278	B3-41, B4-103, B5-71, B6-63, B7-45
128280	B3-41, B4-103, B5-71, B6-63, B7-45
128281	B3-41, B4-103, B5-71, B6-63, B7-45
128282	B3-41, B4-103, B5-71, B6-63, B7-45

PART NUMBER INDEX

Part Number	Page
128283	B3-41, B4-103, B5-71, B6-63, B7-45
128284	B3-41, B4-103, B5-71, B6-63, B7-45
128285	B3-41, B4-103, B5-71, B6-63, B7-45
128286	B3-41, B4-103, B5-71, B6-63, B7-45
128350	B3-41, B4-103, B5-71, B6-63, B7-45
128351	B3-41, B4-103, B5-71, B6-63, B7-45
128352	B3-41, B4-103, B5-71, B6-63, B7-45
128353	B3-41, B4-103, B5-71, B6-63, B7-45
128354	B3-41, B4-103, B5-71, B6-63, B7-45
128355	B3-41, B4-103, B5-71, B6-63, B7-45
128356	B3-41, B4-103, B5-71, B6-63, B7-45
128357	B3-41, B4-103, B5-71, B6-63, B7-45
128358	B3-41, B4-103, B5-71, B6-63, B7-45
128363	B3-41, B4-103, B5-71, B6-63, B7-45
128364	B3-41, B4-103, B5-71, B6-63, B7-45
128365	B3-41, B4-103, B5-71, B6-63, B7-45
128366	B3-41, B4-103, B5-71, B6-63, B7-45
128367	B3-41, B4-103, B5-71, B6-63, B7-45
128368	B3-41, B4-103, B5-71, B6-63, B7-45
128369	B3-41, B4-103, B5-71, B6-63, B7-45
128380	B6-60
128381	B6-60
128382	B6-60
128383	B6-60
128384	B6-60
128385	B6-60
128386	B6-60
128387	B6-60
128388	B6-60
128389	B6-60
128390	B6-60
128391	B6-60
128432	B6-12
128435	B6-12
128436	B6-12
128437	B6-12
128438	B6-12
128440	B6-12
128441	B6-12
128443	B6-12
128444	B6-12
128446	B6-12
128449	B6-12
128451	B6-12
128452	B6-12
128474	B6-20
128475	B6-20
128476	B6-20
128477	B6-20
128478	B6-20
128479	B6-20
128480	B6-20
128481	B6-12, B6-20
128482	B6-20
128483	B6-12, B6-20
128484	B6-20
128485	B6-12, B6-20
128488	B6-20
128489	B6-20
128490	B6-20
128646	B2-43, B6-54
128647	B2-43, B6-54
128648	B2-43, B6-54
128649	B2-43, B6-54
128650	B2-43, B6-54
128651	B2-43, B6-54
128652	B2-43, B6-54, B6-58
128653	B2-43, B6-54
128654	B2-43, B6-54
128655	B2-43, B6-54
128656	B2-43, B6-54, B6-58
128657	B2-43, B6-54
128658	B2-43, B6-54
128659	B2-43, B6-54
128660	B2-43, B6-54
128661	B6-54, B6-58
128663	B6-54
128664	B6-54, B6-58
128665	B6-58
128666	B6-54
128667	B6-54
128668	B6-58
128669	B6-58
128670	B6-58
128671	B6-58
128672	B2-43, B6-58
128673	B6-58
128674	B6-58
128675	B6-58
128676	B6-58
128677	B6-54, B6-58
128684	B2-43, B6-54
128696	B6-18
128697	B6-18
128698	B6-18
128700	B6-10
128701	B6-10
128702	B6-10
128703	B6-10
128704	B6-10
128705	B6-10
128706	B6-10
128707	B6-10, B6-16, B6-18
128708	B6-10
128709	B6-10
128710	B6-10, B6-14
128711	B6-10, B6-18
128712	B6-10
128713	B6-10
128714	B6-10
128715	B6-10
128717	B6-10
128719	B6-10
128720	B6-10
128721	B6-14
128722	B6-14
128723	B6-14
128724	B6-14
128725	B6-14
128726	B6-14
128727	B6-14
128728	B6-14
128729	B6-14
128730	B6-14
128731	B6-14
128732	B6-14
128733	B6-14
128734	B6-14
128735	B6-14
128736	B6-14
128738	B6-14
128739	B6-14
128741	B6-14
128742	B6-22
128743	B6-22
128744	B6-22
128745	B6-22
128746	B6-22
128747	B6-22
128748	B6-22
128749	B6-22
128750	B6-22
128751	B6-22
128752	B6-22
128753	B6-22
128754	B6-22
128755	B6-22
128756	B6-22
128757	B6-26
128758	B6-26
128759	B6-26
128760	B6-26
128761	B6-26
128762	B6-26
128763	B6-26
128764	B6-26, B6-30
128765	B6-26
128766	B6-26
128767	B6-26
128768	B6-26
128769	B6-26
128770	B6-26
128771	B6-26
128772	B6-26
128774	B6-26
128775	B6-34
128776	B6-34
128777	B6-34
128778	B6-34
128779	B6-34
128780	B6-34
128781	B6-34
128782	B6-34, B6-36
128783	B6-34
128784	B6-34
128785	B6-34
128786	B6-34, B6-36
128787	B6-34
128788	B6-34
128789	B6-34
128790	B6-34
128792	B6-34
128794	B6-34
128795	B6-34
128796	B6-33
128797	B6-33
128798	B6-33
128799	B6-33
128800	B6-33
128801	B6-33
128802	B6-33
128803	B6-33
128804	B6-33
128805	B6-33
128806	B6-33
128807	B6-33
128808	B6-38
128809	B6-38
128810	B6-38, B6-40
128811	B6-38
128812	B6-38
128813	B6-38, B6-40
128814	B6-38, B6-40
128815	B6-38
128816	B6-38
128817	B6-38
128818	B6-38
128820	B6-38
128822	B6-38
128823	B6-18
128824	B6-16, B6-18
128825	B6-16, B6-18
128826	B6-18
128827	B6-18
128828	B6-18
128829	B6-16, B6-18
128830	B6-10, B6-16, B6-18
128831	B6-16, B6-18
128832	B6-10, B6-18
128833	B6-16, B6-18

PART NUMBER INDEX

Part Number	Page	Part Number	Page	Part Number	Page	Part Number	Page
128834	B6-10, B6-18	129045	B5-16	129202	B5-16	129262	B2-24
128835	B6-30	129046	B5-16	129203	B5-8, B5-16	129263	B2-24
128836	B6-30	129047	B5-16	129204	B5-8	129264	B2-24
128837	B6-30	129048	B5-20	129205	B5-8	129265	B2-24
128838	B6-30	129049	B5-20, B7-20	129206	B5-8	129266	B2-24
128839	B6-30	129078	B5-26, B5-30	129207	B5-8	129267	B2-24
128840	B6-30	129148	B5-24	129208	B5-8	129268	B2-24
128841	B6-30	129149	B5-10	129209	B5-8	129269	B2-24
128842	B6-26, B6-30	129150	B5-8, B5-16	129210	B5-16	129270	B2-24
128843	B6-36	129151	B5-8, B5-16	129211	B5-10	129271	B2-24
128844	B6-36	129152	B5-8	129212	B5-10	129272	B2-24
128845	B6-36	129153	B5-8	129213	B5-10	129273	B2-24
128846	B6-36	129154	B5-8	129214	B5-10	129274	B2-24
128847	B6-36	129155	B5-8	129215	B5-10	129275	B2-24
128848	B6-36	129156	B5-8	129216	B5-10	129276	B5-24
128849	B6-36	129157	B5-8	129217	B5-20	129277	B5-24
128850	B6-34, B6-36	129158	B5-8	129218	B5-20, B7-20	129278	B5-24
128851	B6-36	129159	B5-8	129219	B5-20, B7-20	129279	B5-24
128852	B6-34, B6-36	129160	B5-8	129220	B5-20	129280	B5-24
128853	B6-36	129161	B5-8, B5-20, B7-20	129221	B5-20, B7-20	129281	B5-24
128854	B6-34, B6-36	129162	B5-8	129222	B5-20, B7-20	129282	B5-24
128855	B6-40	129163	B5-8	129223	B5-20, B7-20	129283	B5-24
128856	B6-40	129164	B5-10	129224	B5-10, B5-20, B7-20	129284	B5-24
128857	B6-40	129165	B5-10	129225	B5-20, B7-20	129285	B5-24
128858	B6-40	129166	B5-10	129226	B5-10, B5-20	129286	B5-24
128859	B6-40	129167	B5-10	129227	B5-20, B7-20	129287	B5-24
128860	B6-40	129168	B5-10	129228	B5-10, B5-20	129288	B5-24
128861	B6-40	129169	B5-10	129229	B5-20	129289	B5-24
128862	B6-38, B6-40	129170	B5-10	129230	B5-20	129290	B5-24
128863	B6-40	129171	B5-10	129231	B5-20	129291	B2-50
128864	B6-38, B6-40	129172	B5-10	129232	B5-20	129292	B2-50
128865	B6-40	129173	B5-10	129233	B5-20	129293	B2-50
128866	B6-38, B6-40	129174	B5-12	129234	B5-22	129294	B2-50
128960	B1-35, B2-77	129175	B5-12	129235	B5-22	129295	B2-50
128961	B1-35, B2-77	129176	B5-12	129236	B5-22	129296	B2-50
128962	B1-35, B2-77	129177	B5-12	129237	B5-22	129297	B2-50
128963	B1-35, B2-77	129178	B5-12	129238	B5-22	129298	B2-50
128964	B1-35, B2-77	129179	B5-14	129239	B5-22	129299	B2-50
128965	B1-35, B2-77	129180	B5-14	129240	B5-22	129300	B2-50
128966	B1-35, B2-77	129181	B5-14	129241	B5-22	129301	B5-26
128974	B1-35, B2-77	129182	B5-14	129242	B5-22	129302	B5-26
128975	B1-35, B2-77	129183	B5-16	129243	B5-22	129303	B5-26
128976	B1-35, B2-77	129184	B5-16	129244	B2-44	129304	B5-26
128977	B1-35, B2-77	129185	B5-16	129245	B2-44	129305	B5-26
128978	B1-35, B2-77	129186	B5-16	129246	B2-44	129306	B5-26
128980	B1-35, B2-77	129187	B5-16	129247	B2-44	129307	B5-26
128989	B1-35, B2-77	129188	B5-16	129248	B2-44	129308	B5-26
128990	B1-35, B2-77	129189	B5-16	129249	B2-44	129309	B5-26
128991	B1-35, B2-77	129190	B5-16	129250	B2-44	129310	B5-26, B5-30
128992	B1-35, B2-77	129191	B5-16	129251	B2-44	129311	B5-26
128993	B1-35, B2-77	129192	B5-16	129252	B2-44	129312	B5-26
128994	B1-35, B2-77	129193	B5-16	129253	B2-44	129313	B5-26
128996	B1-35, B2-77	129194	B5-16	129254	B2-44	129314	B5-26, B5-30
128997	B1-35, B2-77	129195	B5-16	129255	B2-44	129315	B5-26
128998	B4-32	129196	B5-16	129256	B2-44	129316	B5-26
129040	B5-16	129197	B5-16	129257	B2-44	129317	B5-26
129041	B5-16	129198	B5-16	129258	B2-44	129318	B5-26
129042	B5-16	129199	B5-16	129259	B2-44	129319	B5-26
129043	B5-16	129200	B5-16	129260	B2-24	129320	B5-28
129044	B5-16	129201	B5-16	129261	B2-24	129321	B5-26

PART NUMBER INDEX

Part Number	Page
129322	B5-26
129323	B5-26
129324	B5-26
129325	B5-26
129326	B5-26
129327	B5-26
129328	B5-26
129329	B5-26
129330	B5-30
129331	B5-30
129332	B5-30
129333	B5-30
129334	B5-30
129335	B5-30
129336	B5-30
129337	B5-26, B5-30
129339	B2-54
129340	B2-54
129341	B2-54
129342	B2-54
129343	B2-54
129344	B2-54
129345	B2-54
129346	B2-54
129347	B2-54
129348	B2-54
129349	B2-54
129350	B2-54
129351	B2-54
129352	B2-54
129353	B2-54
129354	B2-54
129355	B2-30
129356	B2-30
129357	B2-30
129358	B2-30
129359	B2-30
129360	B2-30
129361	B2-30
129362	B2-30
129363	B2-30
129364	B2-30
129365	B2-30
129366	B2-30
129367	B2-30
129368	B2-30
129369	B5-30
129371	B5-10
129372	B5-16
129373	B5-26
129374	B5-36
129375	B5-46
129376	B5-10
129377	B5-16
129378	B5-26
129379	B5-36
129380	B5-46
129381	B5-20
129382	B5-22
129383	B5-20
129384	B5-22
129385	B5-20
129386	B5-22
129387	B5-20
129388	B5-22
129392	B2-44
129393	B2-44
129394	B2-54
129395	B2-62
129396	B2-44
129399	B5-12
129417	B5-66
129419	B5-8, B5-20
129420	B5-8, B5-16
129421	B5-8
129422	B5-8, B5-20
129423	B5-8
129424	B5-8, B5-20
129425	B5-10, B5-20
129426	B5-10, B5-20
129427	B5-10, B5-20
129428	B5-10, B5-20
129429	B5-10, B5-20
129430	B5-10, B5-20
129431	B5-10, B5-20
129432	B5-8
129433	B5-16
129434	B5-16
129435	B5-16
129436	B5-16
129437	B5-16
129438	B5-16
129439	B5-16
129440	B5-16
129441	B5-16
129442	B5-12
129443	B5-12, B5-22
129444	B5-12, B5-22
129445	B5-14, B5-22
129446	B5-14, B5-22
129447	B5-14, B5-22
129448	B5-14, B5-22
129449	B5-14, B5-22
129450	B5-14, B5-22
129451	B5-22
129452	B5-12, B5-22
129453	B5-20
129454	B5-20
129455	B5-22
129456	B5-22
129457	B5-24
129458	B5-24
129459	B5-24
129460	B5-24
129461	B5-24
129462	B5-24
129463	B5-24
129464	B5-35
129465	B5-35
129466	B5-35, B5-42
129467	B5-35, B5-42
129468	B5-35, B5-42
129469	B5-36, B5-42
129470	B5-36, B5-42
129471	B5-36, B5-42
129472	B5-36, B5-42
129473	B5-36, B5-42
129474	B5-36, B5-42
129475	B5-36, B5-42
129476	B5-38, B5-44
129477	B5-38, B5-44
129478	B5-38, B5-44
129479	B5-40, B5-44
129480	B5-40, B5-44
129481	B5-40, B5-44
129482	B5-40, B5-44
129483	B5-40, B5-44
129484	B5-40, B5-44
129485	B5-40, B5-44
129486	B5-42
129487	B5-42
129488	B5-44
129489	B5-44
129490	B5-26
129491	B5-26
129492	B5-26, B5-30
129493	B5-26, B5-30
129494	B5-26, B5-30
129495	B5-26, B5-30
129496	B5-26, B5-30
129497	B5-26, B5-30
129498	B5-26, B5-30
129499	B5-28
129500	B5-28
129501	B5-46, B5-48
129502	B5-46, B5-48
129503	B5-46, B5-48
129504	B5-46, B5-48
129505	B5-46, B5-48
129506	B5-46, B5-48
129507	B5-46, B5-48
129508	B5-46, B5-48
129509	B5-48
129510	B5-48
129511	B5-33
129512	B5-33
129513	B5-33
129514	B5-33
129515	B5-33
129516	B5-62
129517	B5-62
129518	B5-62, B5-66
129519	B5-62, B5-66
129520	B5-62, B5-66
129521	B5-64, B5-66
129522	B5-64, B5-66
129523	B5-64, B5-66
129524	B5-64, B5-66
129525	B5-64, B5-66
129526	B5-64, B5-66
129527	B5-64, B5-66
129528	B5-66
129529	B5-66
129530	B2-44
129531	B2-44
129532	B2-44
129533	B2-44
129534	B2-44
129535	B2-44
129536	B2-44
129537	B2-50
129538	B2-50
129539	B2-50
129540	B2-50
129541	B2-62
129542	B2-62
129543	B2-62
129544	B2-62
129545	B2-62
129546	B2-62
129547	B2-62
129548	B2-54
129549	B2-54
129550	B2-54
129551	B2-54
129552	B2-54
129553	B2-54
129554	B2-54
129555	B2-58
129556	B2-58
129557	B2-58
129558	B2-58
129559	B2-24
129560	B2-24
129561	B2-24
129562	B2-24
129563	B2-24
129564	B2-24
129565	B2-24
129566	B2-24
129567	B2-35
129568	B2-35
129569	B2-35
129570	B2-35
129571	B2-35
129572	B2-35
129573	B2-30
129574	B2-30
129575	B2-30
129576	B2-30
129577	B2-30
129578	B2-30
129579	B2-40
129580	B2-40
129581	B2-40
129582	B2-40
129583	B2-40
129584	B2-40
129585	B2-40
129602	B2-24, B2-44

PART NUMBER INDEX

Part Number	Page	Part Number	Page	Part Number	Page	Part Number	Page
129603	B2-44	129673	B5-36	129733	B2-35	129793	B5-64
129605	B2-24	129674	B5-36	129734	B2-35	129794	B5-64
129606	B2-24, B2-44	129675	B5-36	129735	B5-46	129795	B5-64
129611	B2-44	129676	B5-36	129736	B5-46	129796	B5-62
129612	B2-24	129677	B5-36	129737	B5-46	129797	B5-62
129613	B2-24, B2-44	129678	B5-36	129738	B5-46, B5-48	129798	B5-62
129615	B5-33	129679	B5-42	129739	B5-46	129799	B5-62
129616	B5-33	129680	B5-42	129740	B5-46	129800	B5-62
129617	B5-33	129681	B5-42	129741	B5-46, B5-48	129801	B5-64
129618	B5-33	129682	B5-42	129742	B5-46, B5-48	129802	B5-64
129619	B5-33	129683	B5-42	129743	B5-46	129803	B5-64
129620	B5-33	129684	B5-42	129744	B5-46	129804	B5-64
129621	B5-33	129685	B5-42	129745	B5-46	129805	B5-64
129622	B5-33	129686	B5-42	129746	B5-46	129806	B5-64
129623	B5-33	129687	B5-36, B5-42	129747	B5-46	129807	B5-64
129624	B5-33	129688	B5-42	129748	B5-46	129808	B5-66
129625	B5-33	129689	B5-36, B5-42	129749	B5-46	129809	B5-66
129626	B5-33	129690	B5-42	129750	B5-46	129810	B5-66
129627	B2-58	129691	B5-36, B5-42	129751	B5-46	129811	B5-66
129629	B2-58	129692	B5-42	129752	B5-46	129812	B5-66
129631	B2-58	129693	B5-42	129753	B5-46	129813	B5-66
129632	B2-58	129694	B5-42	129754	B5-46	129814	B5-66
129634	B2-58	129695	B5-42	129755	B5-46	129815	B5-64, B5-66
129635	B2-58	129696	B5-42	129756	B5-46	129816	B5-66
129637	B5-35	129697	B5-44	129757	B5-46	129817	B5-64, B5-66
129638	B5-35	129698	B5-44	129758	B5-48	129818	B5-66
129639	B5-35	129699	B5-44	129759	B5-48	129819	B5-64, B5-66
129640	B5-35	129700	B5-44	129760	B5-48	129820	B5-66
129641	B5-35	129701	B5-44	129761	B5-48	129821	B5-66
129642	B5-35	129702	B5-44	129762	B5-48	129822	B5-66
129643	B5-35	129703	B5-44	129763	B5-48	129823	B5-66
129644	B5-35	129704	B5-44	129764	B5-48	129824	B5-66
129645	B5-35	129705	B2-62	129765	B5-46, B5-48	129825	B2-40
129646	B5-35, B5-42	129706	B2-62	129766	B5-48	129826	B2-40
129647	B5-35	129707	B2-62	129767	B5-46, B5-48	129827	B2-40
129648	B5-35	129708	B2-62	129768	B5-48	129828	B2-40
129649	B5-36	129709	B2-62	129769	B5-46, B5-48	129829	B2-40
129650	B5-36	129710	B2-62	129770	B5-48	129830	B2-40
129651	B5-36	129711	B2-62	129771	B5-48	129831	B2-40
129652	B5-36	129712	B2-62	129772	B5-48	129832	B2-40
129653	B5-36	129713	B2-62	129773	B5-48	129833	B2-40
129654	B5-36	129714	B2-62	129774	B5-62	129834	B2-40
129655	B5-36	129715	B2-62	129775	B5-62	129835	B2-40
129656	B5-36	129716	B2-62	129776	B5-62	129836	B2-40
129657	B5-36	129717	B2-62	129777	B5-62	129837	B2-40
129658	B5-36	129718	B2-62	129778	B5-62	129838	B2-40
129659	B5-38	129719	B2-62	129779	B5-62	129839	B2-40
129660	B5-38	129720	B2-62	129780	B5-62	129840	B2-40
129661	B5-38	129721	B2-35	129781	B5-62	129841	B5-8
129662	B5-40	129722	B2-35	129782	B5-62	129842	B5-8
129663	B5-40	129723	B2-35	129783	B5-62, B5-66	129843	B5-8
129664	B5-40	129724	B2-35	129784	B5-62	129844	B5-64
129665	B5-40	129725	B2-35	129785	B5-62	129845	B5-64
129666	B5-40	129726	B2-35	129786	B5-64	129889	B5-66
129667	B5-35	129727	B2-35	129787	B5-64, B5-66	129890	B5-66
129668	B5-35	129728	B2-35	129788	B5-64	129891	B5-66
129669	B5-35	129729	B2-35	129789	B5-64	129892	B5-66
129670	B5-35	129730	B2-35	129790	B5-64	129893	B5-66
129671	B5-35	129731	B2-35	129791	B5-64	129894	B5-66
129672	B5-36	129732	B2-35	129792	B5-64	129895	B5-66

PART NUMBER INDEX

Part Number	Page
129896	B5-66
129897	B5-66
129898	B5-66
129899	B5-66
129967	B2-24, B2-30, B2-35, B2-40, B2-44, B2-50, B2-54, B2-58, B2-62, B2-66
129968	B2-24, B2-30, B2-35, B2-40, B2-44, B2-50, B2-54, B2-58, B2-62, B2-66
129969	B2-24, B2-30, B2-35, B2-40, B2-44, B2-50, B2-54, B2-58, B2-62, B2-66
129970	B2-24, B2-30, B2-35, B2-40, B2-50, B2-54, B2-58, B2-62, B2-66
129971	B2-24, B2-30, B2-35, B2-40, B2-50, B2-54, B2-58, B2-62, B2-66
129972	B2-24, B2-30, B2-35, B2-40, B2-44, B2-50, B2-54, B2-58, B2-62, B2-66
129973	B2-24, B2-30, B2-35, B2-40, B2-44, B2-50, B2-54, B2-58, B2-62, B2-66
129974	B2-24, B2-30, B2-35, B2-40, B2-44, B2-50, B2-54, B2-58, B2-62, B2-66
129975	B2-24, B2-30, B2-35, B2-40, B2-54, B2-62
129976	B2-40, B2-44, B2-54, B2-62
129977	B2-40, B2-44, B2-54, B2-62
129978	B2-24, B2-30, B2-35, B2-40, B2-44, B2-54, B2-62
129979	B2-24, B2-30, B2-35, B2-40, B2-44, B2-54, B2-62
129980	B2-24, B2-30, B2-35, B2-40, B2-44, B2-50, B2-54, B2-62, B2-66
129981	B2-24, B2-30, B2-35, B2-40, B2-44, B2-50, B2-54, B2-62, B2-66
129982	B2-24, B2-30, B2-35, B2-40, B2-50, B2-54, B2-62, B2-66
129983	B2-24, B2-30, B2-35, B2-40, B2-44, B2-50, B2-54, B2-62, B2-66
129984	B2-24, B2-30, B2-35, B2-40, B2-54, B2-62
129985	B2-40, B2-44, B2-54, B2-62
129986	B2-24, B2-30, B2-35, B2-40, B2-44, B2-54, B2-62
129988	B2-50
129989	B2-50
129990	B2-50
129991	B2-50
130044	B18-27
130045	B18-27
130047	B18-27
130049	B18-27
130050	B18-27
130051	B18-27
130054	B18-27
130056	B18-27
130057	B18-27
130058	B18-27
130059	B18-27
130060	B18-27
130062	B18-27
130063	B18-27
130064	B18-27
130065	B18-27
130066	B18-27
130067	B18-27
130068	B18-27
130069	B18-27
130070	B18-27
130071	B18-27
130073	B18-27
130078	B18-27
130276	B9-6
130300	B9-34
130301	B9-34
130302	B9-34
130303	B9-34
130305	B9-34
130306	B9-34
130307	B9-34
130308	B9-34
130310	B9-6, B9-10
130311	B9-6, B9-10
130312	B9-8
130313	B9-8
130314	B9-8
130315	B9-8
130316	B9-8
130317	B9-8
130318	B9-10
130319	B9-10
130320	B9-10
130321	B9-10
130322	B9-10
130323	B9-10
130324	B9-6
130325	B9-6
130326	B9-16
130327	B9-16
130328	B9-16
130329	B9-16
130330	B9-16
130331	B9-16
130332	B9-24
130333	B9-24
130334	B9-24
130335	B9-24
130336	B9-24
130337	B9-24
130338	B9-24
130339	B9-24
130340	B9-30
130341	B9-30
130342	B9-30
130343	B9-30
130344	B9-30
130345	B9-30
130346	B9-32
130347	B9-32
130348	B9-32
130349	B9-32
130350	B9-32
130351	B9-32
130352	B9-16
130353	B9-16
130354	B4-32
130355	B4-32
130356	B4-32
130357	B4-32
130358	B4-32
130359	B4-32
130360	B4-32
130361	B4-32
130362	B4-46
130363	B4-46
130364	B4-46
130365	B4-46
130366	B4-46
130367	B4-40
130368	B4-40
130369	B4-40
130370	B4-40
130371	B4-40
130372	B4-40
130373	B4-40
130689	B5-18
130691	B5-18
130692	B5-18
130693	B5-18
130694	B5-18
130695	B5-18
130696	B5-18
130697	B5-18
130698	B5-18
130699	B5-18
130700	B5-18
130701	B5-18
130702	B5-18
130769	B9-12
130770	B9-12
130771	B9-12
130772	B9-12
130773	B9-12
130774	B9-12
130775	B9-12
130776	B9-18
130777	B9-18
130778	B9-18
130779	B9-18
130780	B9-18
130781	B9-20
130782	B9-20
130783	B9-20
130784	B9-20
130785	B9-20
130786	B9-20
130787	B9-20
130788	B9-28
130789	B9-28
130790	B9-28
130791	B9-28
130792	B9-28
130793	B9-32
130794	B9-32
130795	B9-32
130796	B9-32
130797	B9-32
130798	B9-32
130799	B9-32
130831	B7-26
130832	B7-26
130833	B7-26
130834	B7-26
130835	B7-26
130836	B7-26
130837	B7-26
130838	B7-30
130839	B7-30
130840	B7-30
130841	B7-30
130842	B7-30
130843	B7-30
130845	B7-34
130846	B7-34
130847	B7-34
130848	B7-34
130849	B7-34
130850	B7-34
130851	B7-34
130852	B7-34
130853	B7-34
130854	B7-34
130880	B7-24
131050	B7-24
131052	B7-24
131054	B7-24
131056	B7-24
131057	B7-24

PART NUMBER INDEX

Part Number	Page	Part Number	Page	Part Number	Page	Part Number	Page
131058	B7-24	131180	B7-32	131339	B7-14	131747	B9-16
131059	B7-24	131182	B7-32	131340	B7-18	131748	B9-16
131060	B7-24	131185	B7-32	131341	B7-12	131749	B9-16
131061	B7-24	131186	B9-30	131342	B7-12	131800	B7-12, B7-16
131063	B7-24	131187	B9-30	131343	B7-28	131801	B7-12, B7-16
131064	B7-24	131188	B9-30	131356	B7-39	131802	B7-12
131065	B7-24	131189	B9-30	131357	B7-39	131803	B7-12
131066	B7-24	131190	B9-30	131358	B7-39	131804	B7-12
131067	B7-24	131191	B9-30	131359	B7-39	131805	B7-12
131070	B7-24	131192	B9-30	131360	B7-39	131806	B7-12
131071	B7-24	131193	B9-30	131361	B7-39	131807	B7-12
131072	B7-24	131194	B9-30	131363	B7-39	131808	B7-12
131074	B7-24	131195	B9-30	131364	B7-39	131809	B7-12
131075	B7-24	131196	B9-30	131365	B7-39	131810	B7-12
131077	B7-24	131197	B9-30	131366	B7-39	131811	B7-12
131079	B7-24	131198	B9-30	131377	B9-24	131812	B7-12
131082	B9-6	131204	B7-34	131378	B9-24	131813	B7-14
131083	B9-6	131206	B7-34	131379	B9-24	131814	B7-14
131084	B9-6	131207	B7-34	131380	B9-24	131815	B7-14
131085	B9-6	131208	B7-34	131381	B9-24	131816	B7-14
131100	B7-28	131209	B7-34	131382	B9-24	131817	B7-14
131102	B7-28	131210	B7-34	131383	B9-24	131818	B7-14
131104	B7-28	131211	B7-34	131384	B9-24	131819	B7-14
131106	B7-28	131213	B7-34	131385	B9-24	131820	B7-14
131107	B7-28	131214	B7-34	131386	B9-24	131821	B7-14
131108	B7-28	131215	B7-34	131387	B9-24	131830	B7-16
131109	B7-28	131216	B7-34	131388	B9-24	131831	B7-16
131110	B7-28	131217	B7-34	131389	B9-24	131832	B7-16
131111	B7-28	131220	B7-34	131432	B7-14	131833	B7-16
131113	B7-28	131221	B7-34	131433	B7-14	131834	B7-16
131114	B7-28	131222	B7-34	131434	B7-18	131835	B7-16
131115	B7-28	131225	B7-34	131435	B9-34	131836	B7-16
131116	B7-28	131227	B7-34	131436	B9-34	131837	B7-16
131117	B7-28	131230	B7-34	131437	B9-34	131838	B7-16
131120	B7-28	131232	B7-34	131438	B9-34	131839	B7-16
131121	B7-28	131235	B7-34	131439	B9-34	131840	B7-16
131122	B7-28	131238	B9-32	131440	B9-34	131841	B7-18
131125	B7-28	131239	B9-32	131441	B9-34	131842	B7-18
131127	B7-28	131240	B9-32	131442	B9-34	131843	B7-18
131130	B7-28	131241	B9-32	131443	B9-34	131844	B7-18
131132	B7-28	131243	B9-32	131444	B9-34	131845	B7-18
131135	B7-28	131244	B9-32	131445	B9-34	131846	B7-18
131137	B7-28	131245	B9-32	131446	B9-34	131847	B7-18
131154	B7-32	131246	B9-32	131447	B9-34	131848	B7-18
131156	B7-32	131248	B9-32	131536	B7-36	131849	B7-18
131157	B7-32	131249	B9-32	131537	B7-36	131895	B7-12
131158	B7-32	131250	B9-32	131540	B7-36	131896	B7-12
131159	B7-32	131259	B7-37	131542	B7-36	131897	B7-12
131160	B7-32	131260	B7-37	131545	B7-36	131900	B7-40
131161	B7-32	131261	B7-37	131589	B9-6	131902	B7-40
131163	B7-32	131263	B7-37	131737	B9-16	131904	B7-40
131164	B7-32	131264	B7-37	131738	B9-16	131906	B7-40
131165	B7-32	131265	B7-37	131739	B9-16	131907	B7-40
131166	B7-32	131266	B7-37	131740	B9-16	131908	B7-40
131167	B7-32	131275	B7-37	131741	B9-16	131909	B7-40
131170	B7-32	131276	B7-37	131742	B9-16	131910	B7-40
131171	B7-32	131317	B7-38	131743	B9-16	131911	B7-40
131172	B7-32	131325	B7-38	131744	B9-16	131912	B7-40
131175	B7-32	131327	B7-38	131745	B9-16	131913	B7-40
131177	B7-32	131335	B7-38	131746	B9-16	131914	B7-40

PART NUMBER INDEX

Part Number	Page
131915	B7-40
131916	B7-40
131918	B7-40
131919	B7-40
131920	B7-40
131923	B7-40
131924	B7-40
131927	B7-40
131928	B7-40
131931	B7-40
131933	B7-40
131934	B7-40
131970	B9-6
131971	B9-6
131972	B9-6
131973	B9-6
131974	B9-6
131975	B9-6
131976	B9-6
131977	B9-6
131978	B9-6
131979	B9-6
131980	B9-6
131981	B9-6
131982	B9-8
131983	B9-10
131984	B9-10
131985	B9-10
131986	B9-10
131987	B9-10
131988	B9-10
131989	B9-10
131990	B9-10
131991	B9-10
131992	B9-10
131993	B9-10
131994	B9-10
131995	B9-10
131996	B9-6
132151	B18-18
132152	B18-18
132153	B18-18
132154	B18-18
132155	B18-18
132156	B18-18
132157	B18-18
132158	B18-18
132159	B18-18
132160	B18-18
132161	B18-18
132192	B18-13, B18-25
132193	B18-13, B18-25
132198	B18-13, B18-25
132203	B18-19
132205	B18-19
132383	B18-18
132384	B18-18, B18-26
132385	B18-18
132386	B18-18
132387	B18-18
132388	B18-18
132389	B18-18
132420	B18-19
132421	B18-19
132422	B18-19
132423	B18-19
132424	B18-19
132425	B18-19
132426	B18-19
132427	B18-19
132428	B18-19
132429	B18-19
132430	B18-19
132474	B18-18
132475	B18-18
132476	B18-18
132477	B18-18
132538	B18-17
132539	B18-17
132542	B18-18, B18-22
132546	B18-13, B18-18, B18-22
132547	B18-13, B18-18, B18-22
132548	B18-13, B18-18, B18-22
132549	B18-13, B18-18, B18-22
132559	B18-17
132564	B18-15, B18-17, B18-18, B18-22
132565	B18-15, B18-17, B18-18, B18-22
132566	B18-15, B18-17, B18-18, B18-22
132567	B18-15, B18-22
132591	B18-17
132594	B18-17
132597	B18-17
132766	B18-15
132767	B18-15
132768	B18-15
132811	B18-18, B18-23
132814	B18-15, B18-17, B18-18, B18-23
132816	B18-15, B18-17, B18-18, B18-23
132819	B18-15, B18-17, B18-18, B18-23
132822	B18-15, B18-23
132834	B18-26
132924	B18-15
132925	B18-15
132926	B18-15
132950	B18-10
132951	B18-10
132952	B18-12
132953	B18-12
132954	B18-12
132955	B18-12
132956	B18-12
132957	B18-12
132958	B18-12
132959	B18-10
132983	B18-10
132984	B18-10
132985	B18-10
132986	B18-10
132987	B18-10
132988	B18-10
132989	B18-10
132990	B18-10
132991	B18-10
132992	B18-10
133203	B18-10
133245	B18-10
133250	B18-10
133255	B18-10
133260	B18-10
133265	B18-10
133270	B18-10
133275	B18-10
133280	B18-10
133285	B18-12
133292	B18-12
133293	B18-12
133294	B18-12
133295	B18-12
133296	B18-12
133297	B18-12
133303	B18-17
133304	B18-17
133305	B18-17
133344	B18-10, B18-25
133392	B18-15
133550	B18-15
133565	B18-17
133566	B18-17
133583	B18-10
133584	B18-10
133585	B18-10
133586	B18-10
133590	B18-12
133591	B18-12
133592	B18-12
133593	B18-12
133594	B18-12
133595	B18-12
133596	B18-12
133669	B18-15
133932	B18-13, B18-18, B18-23
133933	B18-13, B18-18, B18-23
133937	B18-13, B18-18, B18-23
133938	B18-13, B18-18, B18-23
133959	B18-15
133960	B18-15
133961	B18-15
133980	B18-10
133981	B18-10
133982	B18-10
133983	B18-10
133984	B18-10
133985	B18-10
133986	B18-10
133987	B18-10
133988	B18-13
133989	B18-13
133990	B18-13
133991	B18-13
133992	B18-13
133993	B18-13
133994	B18-13
133995	B18-15, B18-17
133996	B18-15, B18-17
133997	B18-15, B18-17
134186	B6-24
134187	B6-24
134188	B6-24
134189	B6-24
134190	B6-24
134191	B6-24
134192	B6-24
134193	B6-24
134194	B6-24
134195	B6-24
134196	B6-24
134197	B6-24
134200	B18-12
134201	B18-12
134202	B18-12
134203	B18-12
134204	B18-12
134205	B18-12
134206	B18-12
134207	B18-12
134208	B18-12
134209	B18-12
134210	B18-12
134211	B18-12
134212	B18-12
134213	B18-12
134516	B18-21
134517	B18-21
134518	B18-21
134519	B18-21
134520	B18-21
134521	B18-21
134716	B18-21
134717	B18-21
134718	B18-21
134719	B18-21
134720	B18-21
134721	B18-21
134779	B18-21
134796	B18-28
134798	B18-28

PART NUMBER INDEX

Part Number	Page
134800	B18-28
134803	B18-28
134806	B18-28
134809	B18-28
134869	B18-21
134870	B18-21
134871	B18-21
134872	B18-21
134873	B18-21
134874	B18-21
134875	B18-21
134876	B18-21
134877	B18-21
134886	B18-21
134887	B18-21
134888	B18-21
134889	B18-21
134890	B18-21
134891	B18-21
135081	B4-73
135102	B4-73
135105	B4-73
135106	B4-73
135107	B4-73
135109	B4-73
135111	B4-73
135116	B4-78
135117	B4-78
135118	B4-78
135120	B4-78
135121	B4-78
135123	B4-80
135125	B4-80
135127	B4-80
135129	B4-80
135130	B4-80
135135	B18-27
135136	B18-27
135137	B18-27
135138	B18-27
135170	B4-73
135171	B4-72, B4-73
135172	B4-72, B4-73
135181	B4-80
135182	B4-78
135183	B4-76, B4-80
135184	B4-76, B4-80
135185	B4-76, B4-80
135290	B18-27
135291	B18-27
135292	B18-27
135293	B18-27
135294	B18-27
135295	B18-27
135296	B18-27
135297	B18-27
135298	B18-27
135299	B18-27
135700	B18-27
135704	B18-27
135708	B18-27
135712	B18-27
135716	B18-27
135720	B18-27
135724	B18-27
135728	B18-27
135732	B18-27
135736	B18-27
136070	B4-83
136071	B4-83
136072	B4-83
136073	B4-83
136074	B4-83
136075	B4-83
136076	B4-83
136080	B4-83
136081	B4-82, B4-83
136082	B4-82, B4-83
136083	B4-82, B4-83
136084	B4-83
136085	B4-83
136110	B5-50
136111	B5-50
136112	B5-50
136113	B5-50
136114	B5-50
136115	B5-50
136116	B5-50
136117	B5-50, B5-52
136118	B5-50
136119	B5-50
136120	B5-50
136122	B5-50
136123	B5-50
136124	B5-50
136125	B5-50
136126	B5-50
136127	B5-50
136128	B5-50
136129	B5-50
136130	B5-54
136131	B5-54
136132	B5-54
136133	B5-54
136134	B5-54
136135	B5-54
136136	B5-54
136137	B5-54, B5-58
136138	B5-54
136139	B5-54
136140	B5-54
136141	B5-54
136142	B5-56
136143	B5-56
136144	B5-56
136145	B5-56
136146	B5-56
136147	B5-56
136148	B5-56
136149	B5-56
136150	B5-56
136151	B5-56
136152	B5-60
136153	B5-60
136154	B5-60
136155	B5-60
136156	B5-60
136157	B5-60
136158	B5-60
136159	B5-52
136160	B5-52
136161	B5-52
136162	B5-52
136163	B5-52
136164	B5-52
136165	B5-52
136166	B5-52
136167	B5-50, B5-52
136168	B5-52
136169	B5-50, B5-52
136170	B5-58
136171	B5-58
136172	B5-58
136173	B5-58
136174	B5-58
136175	B5-58
136176	B5-58
136177	B5-58
136178	B5-56, B5-58
136179	B5-58
136180	B5-56, B5-58
136181	B5-58
136182	B5-56, B5-58
136183	B5-58
136184	B5-58
136185	B5-58
136186	B5-61
136187	B5-61
136188	B5-61
136189	B5-60, B5-61
136190	B5-61
136191	B5-60, B5-61
136192	B5-61
136193	B5-60, B5-61
136194	B5-61
136195	B5-61
136196	B5-61
136197	B5-61
136198	B5-61
136210	B5-50
136211	B5-50, B5-52
136212	B5-50, B5-52
136213	B5-50, B5-52
136214	B5-50, B5-52
136215	B5-50, B5-52
136216	B5-50, B5-52
136217	B5-50, B5-52
136218	B5-50, B5-52
136219	B5-54
136220	B5-54, B5-58
136221	B5-54, B5-58
136222	B5-54, B5-58
136223	B5-54, B5-58
136224	B5-56, B5-58
136225	B5-56, B5-58
136226	B5-56, B5-58
136227	B5-56, B5-58
136228	B5-56, B5-58
136229	B5-56, B5-58
136230	B5-58
136231	B5-60, B5-61
136232	B5-60, B5-61
136233	B5-60, B5-61
136234	B5-60, B5-61
136235	B5-60, B5-61
136236	B5-61
136237	B5-61
136238	B5-50
136239	B5-50
136240	B5-50
136241	B5-50
136242	B5-50
136243	B5-50
136244	B5-50
136245	B5-50
136246	B5-50
136247	B5-54
136248	B5-54
136249	B5-54
136250	B5-54
136251	B5-54
136252	B5-56
136253	B5-56
136254	B5-56
136255	B5-56
136257	B5-56
136258	B5-20
136259	B5-20, B7-20
136260	B5-20
136261	B5-20, B7-20
136262	B5-20, B7-20
136263	B5-20, B7-20
136264	B5-20
136265	B5-20
136266	B5-20
136267	B5-20
136268	B5-30
136269	B5-30
136270	B5-30
136271	B5-30
136272	B5-30
136273	B5-30
136274	B5-30
136275	B5-42
136276	B5-42
136277	B5-42
136278	B5-42
136279	B5-42
136280	B5-42
136281	B5-42

PART NUMBER INDEX

Part Number	Page
136282	B5-42
136283	B5-42
136284	B5-42
136285	B5-42
136286	B5-48
136287	B5-48
136288	B5-48
136289	B5-48
136290	B5-48
136291	B5-48
136293	B5-48
136294	B5-48
136295	B5-48
136296	B5-52
136297	B5-52
136298	B5-52
136299	B5-52
136300	B5-52
136301	B5-52
136302	B5-52
136303	B5-58
136304	B5-58
136305	B5-58
136306	B5-58
136307	B5-58
136308	B5-58
136309	B5-58
136310	B5-58
136311	B5-58
136312	B5-58
136315	B2-66
136316	B2-66
136317	B2-66
136318	B2-66
136319	B2-66
136320	B2-66
136321	B2-66
136322	B2-66
136323	B2-66
136324	B2-66
136325	B2-66
136326	B2-66
136327	B2-66
136328	B2-66
136329	B2-66
136330	B2-66
136331	B5-32
136332	B5-32
136333	B5-32
136334	B5-32
136335	B5-32
136336	B5-32
136337	B5-32
136338	B5-32
136339	B5-32
136340	B5-32
136341	B5-32
136342	B5-32
136343	B5-34
136344	B5-34
136345	B5-34
136346	B5-34
136347	B5-34
136348	B5-34
136349	B5-34
136350	B5-34
136351	B5-34
136352	B5-34
136353	B5-34
136354	B5-34
136355	B5-32
136356	B5-32
136357	B5-32
136358	B5-32
136359	B5-32
136360	B5-34
136361	B5-34
136362	B5-34
136363	B5-34
136364	B5-34
136365	B5-24
136366	B5-24
136367	B5-24
136368	B5-24
136369	B5-24
136370	B5-24
136371	B5-24
136383	B5-24
136384	B5-24
136385	B5-24
136386	B5-24
136387	B5-24
136388	B5-24
136389	B5-24
136521	B5-8, B5-12, B5-16, B5-26, B5-28, B5-32, B5-34, B5-35, B5-38, B5-62, B5-68
136522	B5-8, B5-12, B5-16, B5-24, B5-26, B5-28, B5-32, B5-33, B5-34, B5-35, B5-38, B5-50, B5-54, B5-62, B5-68
136523	B5-8, B5-12, B5-16, B5-24, B5-26, B5-28, B5-32, B5-33, B5-34, B5-35, B5-38, B5-50, B5-54, B5-62, B5-68
136524	B5-8, B5-16, B5-18, B5-24, B5-26, B5-28, B5-32, B5-33, B5-34, B5-35, B5-38, B5-50, B5-54, B5-62, B5-68
136525	B5-8, B5-12, B5-16, B5-24, B5-26, B5-28, B5-32, B5-33, B5-34, B5-35, B5-38, B5-46, B5-50, B5-54, B5-62, B5-68
136526	B5-8, B5-12, B5-16, B5-18, B5-24, B5-26, B5-28, B5-32, B5-33, B5-34, B5-35, B5-38, B5-46, B5-50, B5-54, B5-62, B5-68
136527	B5-8, B5-12, B5-16, B5-18, B5-24, B5-26, B5-28, B5-32, B5-33, B5-34, B5-35, B5-38, B5-46, B5-50, B5-54, B5-62, B5-68
136528	B5-8, B5-12, B5-16, B5-20, B5-22, B5-24, B5-26, B5-28, B5-30, B5-32, B5-33, B5-34, B5-35, B5-38, B5-42, B5-44, B5-46, B5-48, B5-50, B5-52, B5-54, B5-58, B5-62, B5-66, B5-68
136529	B5-8, B5-12, B5-16, B5-18, B5-24, B5-26, B5-28, B5-32, B5-33, B5-34, B5-35, B5-38, B5-46, B5-50, B5-54, B5-62, B5-68
136530	B5-10, B5-14, B5-16, B5-24, B5-26, B5-28, B5-36, B5-40, B5-46, B5-48, B5-50, B5-54, B5-64, B5-66, B5-68
136531	B5-10, B5-14, B5-16, B5-24, B5-26, B5-28, B5-30, B5-36, B5-40, B5-46, B5-48, B5-50, B5-56, B5-64, B5-66, B5-68
136532	B5-10, B5-14, B5-16, B5-18, B5-24, B5-26, B5-28, B5-36, B5-40, B5-46, B5-50, B5-56, B5-64, B5-68
136533	B5-10, B5-14, B5-16, B5-18, B5-24, B5-26, B5-28, B5-36, B5-40, B5-46, B5-50, B5-56, B5-64, B5-68
136534	B5-10, B5-14, B5-16, B5-18, B5-24, B5-26, B5-28, B5-33, B5-36, B5-40, B5-46, B5-50, B5-56, B5-60, B5-64, B5-68
136535	B5-10, B5-14, B5-16, B5-18, B5-24, B5-26, B5-28, B5-33, B5-36, B5-40, B5-46, B5-50, B5-56, B5-60, B5-64, B5-68
136536	B5-10, B5-14, B5-16, B5-18, B5-26, B5-28, B5-36, B5-40, B5-46, B5-50, B5-56, B5-60, B5-64, B5-68
136537	B5-10, B5-14, B5-16, B5-18, B5-26, B5-28, B5-36, B5-40, B5-46, B5-50, B5-56, B5-60, B5-64, B5-68
136538	B5-10, B5-14, B5-16, B5-18, B5-26, B5-28, B5-36, B5-40, B5-46, B5-50, B5-56, B5-60, B5-64, B5-68
136539	B5-46, B5-56, B5-64, B5-68
136540	B5-10, B5-14, B5-16, B5-36, B5-40, B5-56, B5-64, B5-68
136541	B5-20, B5-22, B5-30, B5-42, B5-44, B5-48, B5-52, B5-58, B5-66, B5-68
136542	B5-20, B5-22, B5-30, B5-42, B5-44, B5-48, B5-52, B5-58, B5-66, B5-68
136543	B5-20, B5-22, B5-30, B5-42, B5-44, B5-48, B5-52, B5-58, B5-66, B5-68
136544	B5-20, B5-22, B5-30, B5-42, B5-44, B5-48, B5-52, B5-58, B5-61, B5-66, B5-68
136545	B5-20, B5-22, B5-30, B5-42, B5-44, B5-48, B5-52, B5-58, B5-61, B5-66, B5-68
136546	B5-20, B5-22, B5-30, B5-42, B5-44, B5-48, B5-52, B5-58, B5-61, B5-66, B5-68
136547	B5-14, B5-20, B5-22, B5-36, B5-40, B5-42, B5-44, B5-48, B5-58, B5-61, B5-66, B5-68
136548	B5-10, B5-14, B5-20, B5-22, B5-36, B5-40, B5-42, B5-44, B5-46, B5-48, B5-56, B5-58, B5-60, B5-61, B5-64, B5-66, B5-68

PART NUMBER INDEX

Part Number	Page
136549	B5-20, B5-22, B5-42, B5-44, B5-58, B5-61, B5-66, B5-68
136550	B5-20, B5-22, B5-42, B5-44, B5-48, B5-58, B5-61, B5-66, B5-68
136551	B5-20, B5-22, B5-42, B5-44, B5-48, B5-58, B5-61, B5-66, B5-68
136552	B5-20, B5-22, B5-42, B5-44, B5-48, B5-61, B5-66, B5-68
136553	B5-8, B5-12, B5-16, B5-24, B5-26, B5-28, B5-32, B5-34, B5-35, B5-38, B5-50, B5-54, B5-62, B5-68
136554	B5-8, B5-12, B5-16, B5-18, B5-24, B5-26, B5-28, B5-32, B5-34, B5-35, B5-38, B5-50, B5-54, B5-62, B5-68
136555	B5-8, B5-12, B5-16, B5-18, B5-24, B5-26, B5-28, B5-32, B5-34, B5-35, B5-38, B5-46, B5-50, B5-54, B5-62, B5-68
136556	B5-8, B5-12, B5-16, B5-18, B5-24, B5-26, B5-28, B5-32, B5-34, B5-35, B5-38, B5-46, B5-50, B5-54, B5-62, B5-68
136557	B5-10, B5-14, B5-16, B5-18, B5-26, B5-28, B5-36, B5-40, B5-46, B5-50, B5-56, B5-64, B5-68
136558	B5-10, B5-14, B5-16, B5-18, B5-24, B5-26, B5-28, B5-36, B5-40, B5-46, B5-50, B5-56, B5-60, B5-64, B5-68
136559	B5-10, B5-14, B5-16, B5-18, B5-26, B5-28, B5-36, B5-40, B5-46, B5-50, B5-56, B5-60, B5-64, B5-68
136560	B5-46, B5-56, B5-60, B5-64, B5-68
136561	B5-20, B5-22, B5-30, B5-42, B5-44, B5-48, B5-52, B5-58, B5-66, B5-68
136562	B5-20, B5-22, B5-30, B5-42, B5-44, B5-48, B5-52, B5-58, B5-66, B5-68
136563	B5-20, B5-22, B5-30, B5-42, B5-44, B5-48, B5-52, B5-58, B5-66, B5-68
136564	B5-20, B5-22, B5-30, B5-42, B5-44, B5-48, B5-52, B5-58, B5-66, B5-68
136565	B5-20, B5-22, B5-30, B5-42, B5-44, B5-48, B5-52, B5-58, B5-68
136566	B5-20, B5-22, B5-30, B5-42, B5-44, B5-48, B5-52, B5-58, B5-66, B5-68
136567	B5-22, B5-30, B5-42, B5-44, B5-48, B5-52, B5-58, B5-66, B5-68
136568	B5-10, B5-14, B5-20, B5-22, B5-36, B5-40, B5-42, B5-44, B5-48, B5-58, B5-66, B5-68
136569	B5-20, B5-22, B5-42, B5-44, B5-58, B5-66, B5-68
136570	B5-20, B5-22, B5-42, B5-44, B5-48, B5-58, B5-66, B5-68
136571	B5-20, B5-22, B5-42, B5-44, B5-48, B5-66, B5-68
136574	B5-12
136588	B5-8, B5-12, B5-16, B5-26, B5-28, B5-32, B5-34, B5-35, B5-38, B5-62, B5-68
136589	B5-8, B5-12, B5-16, B5-26, B5-28, B5-32, B5-34, B5-35, B5-38, B5-62, B5-68
136590	B5-8, B5-12, B5-16, B5-24, B5-26, B5-28, B5-32, B5-33, B5-34, B5-35, B5-38, B5-50, B5-54, B5-62, B5-68
136591	B5-8, B5-12, B5-16, B5-24, B5-26, B5-28, B5-32, B5-33, B5-34, B5-35, B5-38, B5-46, B5-50, B5-54, B5-62, B5-68
136592	B5-10, B5-14, B5-16, B5-24, B5-26, B5-28, B5-36, B5-40, B5-46, B5-50, B5-54, B5-64, B5-68
136593	B5-10, B5-14, B5-16, B5-24, B5-26, B5-28, B5-36, B5-40, B5-46, B5-50, B5-54, B5-64, B5-68
136594	B5-10, B5-14, B5-16, B5-18, B5-26, B5-28, B5-36, B5-40, B5-46, B5-50, B5-56, B5-60, B5-64, B5-68
136595	B5-10, B5-14, B5-16, B5-36, B5-40, B5-56, B5-64, B5-68
136596	B5-10, B5-14, B5-16, B5-36, B5-40, B5-56, B5-64, B5-68
136597	B5-20, B5-22, B5-30, B5-42, B5-44, B5-52, B5-58, B5-66, B5-68
136598	B5-20, B5-22, B5-30, B5-42, B5-44, B5-48, B5-52, B5-58, B5-66, B5-68
136599	B5-20, B5-22, B5-30, B5-42, B5-44, B5-48, B5-52, B5-58, B5-61, B5-66, B5-68
136600	B5-10, B5-14, B5-16, B5-20, B5-22, B5-26, B5-28, B5-30, B5-36, B5-40, B5-42, B5-44, B5-46, B5-48, B5-50, B5-52, B5-56, B5-58, B5-61, B5-64, B5-66, B5-68
136601	B5-10, B5-14, B5-16, B5-20, B5-22, B5-26, B5-28, B5-30, B5-36, B5-40, B5-42, B5-44, B5-46, B5-48, B5-50, B5-52, B5-56, B5-58, B5-61, B5-64, B5-66, B5-68
136602	B5-20
136603	B5-20, B5-22, B5-42, B5-44, B5-48, B5-61, B5-66, B5-68
136657	B5-24
136695	B1-15
136696	B1-15
136697	B1-15
136698	B1-15
136699	B1-15
136700	B1-15
136701	B1-15
136702	B1-15
136703	B1-15
136704	B1-17
136705	B1-17
136706	B1-17
136707	B1-17
136708	B1-17
136709	B1-17
136710	B1-19
136711	B1-19
136712	B1-19
136713	B1-19
136714	B1-19
136715	B1-19
136716	B1-19
136717	B1-19
136718	B1-19
136719	B1-23
136720	B1-23
136721	B1-23
136722	B1-23
136723	B1-23
136724	B1-23
136734	B1-28
136735	B1-28
136736	B1-28
136737	B1-28
136738	B1-28
136739	B1-28
136740	B1-15
136741	B1-15
136742	B1-15
136743	B1-15
136744	B1-15
136745	B1-15
136746	B1-15
136747	B1-17
136748	B1-17
136749	B1-17
136750	B1-17
136751	B1-19
136752	B1-19
136753	B1-19
136754	B1-19
136755	B1-19
136756	B1-19
136757	B1-19
136758	B1-23
136759	B1-23
136760	B1-23
136761	B1-23
136769	B1-28
136770	B1-28
136771	B1-28
136772	B1-28
136773	B1-16
136774	B1-16
136775	B1-16
136776	B1-16
136777	B1-16
136778	B1-16
136779	B1-16
136780	B1-16
136781	B1-16
136782	B1-16

PART NUMBER INDEX

Part Number	Page
136783	B1-16
136784	B1-18
136785	B1-18
136786	B1-18
136787	B1-18
136788	B1-18
136789	B1-18
136792	B1-18
136793	B1-20
136794	B1-20
136795	B1-20
136796	B1-20
136797	B1-20
136798	B1-20
136799	B1-20
136800	B1-20
136801	B1-24
136802	B1-24
136803	B1-24
136804	B1-24
136805	B1-24
136806	B1-24
136808	B1-24
136833	B1-32
136834	B1-32
136835	B1-32
136836	B1-32
136837	B1-32
136838	B1-32
136839	B1-32
136840	B1-32
136841	B1-30
136842	B1-30
136843	B1-30
136844	B1-30
136845	B1-30
136846	B1-30
136847	B1-30
136848	B1-30
136849	B1-16
136850	B1-16
136851	B1-16
136852	B1-16
136853	B1-16
136854	B1-16
136855	B1-18
136856	B1-18
136857	B1-18
136858	B1-18
136859	B1-18
136860	B1-18
136861	B1-20
136862	B1-20
136863	B1-20
136864	B1-20
136865	B1-20
136866	B1-20
136867	B1-24
136868	B1-24
136869	B1-24
136870	B1-24
136872	B1-24
136891	B1-32
136892	B1-32
136893	B1-32
136894	B1-32
136895	B1-32
136896	B1-32
136897	B1-30
136898	B1-30
136899	B1-30
136900	B1-30
136901	B1-30
136902	B1-30
136912	B2-29
136913	B2-29
136914	B2-29
136915	B2-29
136916	B2-29
136917	B2-29
136918	B2-29
136919	B2-29
136920	B2-34
136921	B2-34
136922	B2-34
136923	B2-34
136924	B2-34
136925	B2-34
136926	B2-34
136939	B2-38
136940	B2-38
136941	B2-38
136942	B2-38
136943	B2-38
136944	B2-38
136945	B2-38
136946	B2-38
136947	B2-39
136948	B2-39
136949	B2-39
136950	B2-39
136951	B2-39
136952	B2-39
136953	B2-39
136954	B2-39
136955	B2-29
136956	B2-29
136957	B2-29
136958	B2-29
136959	B2-29
136960	B2-29
136961	B2-34
136962	B2-34
136963	B2-34
136964	B2-34
136965	B2-34
136974	B2-38
136975	B2-38
136976	B2-38
136977	B2-38
136978	B2-38
136979	B2-38
136980	B2-39
136981	B2-39
136982	B2-39
136983	B2-39
136984	B2-39
136985	B2-39
136986	B1-15
136987	B1-19
136989	B1-16
136990	B1-18
136991	B1-20
136992	B1-24
136994	B1-32
136995	B1-30
136997	B2-38
136998	B2-39
137101	B18-18
137102	B18-18
137103	B18-18
137104	B18-18
137105	B18-18
137106	B18-18
137107	B18-18
137108	B18-18
137109	B18-18
137110	B18-18
137111	B18-18
139292	B5-48
163256	B5-56
230050	B17-44
230053	B17-44
230056	B17-44
230059	B17-44
230062	B17-44
230065	B17-44
230068	B17-44
230071	B17-44
230074	B17-44
230077	B17-44
230080	B17-44
230134	B17-44
230137	B17-44
230140	B17-44
231063	B17-52
231069	B17-52
231075	B17-52
231081	B17-52
231087	B17-52
231096	B17-52
231102	B17-52
231108	B17-52
231114	B17-52
231120	B17-52
231126	B17-52
231135	B17-52
231141	B17-52
231150	B17-52
389820	B18-25
389821	B18-25
389822	B18-25
389823	B18-25
389824	B18-25
389825	B18-25
389826	B18-25
389827	B18-25
389828	B18-25
389829	B18-25
389830	B18-25
389831	B18-25
389832	B18-25
389833	B18-25
389834	B18-25
389835	B18-25
389836	B18-25
389837	B18-25
389923	B4-97, B8-24
389924	B4-97, B8-24
389925	B8-24
389926	B8-24
389927	B8-24
389928	B8-24
389929	B8-24
389930	B8-24
389931	B8-24
389932	B8-24
389933	B8-24
389934	B8-24
389935	B8-24
389936	B8-24
389937	B8-24
389938	B8-24
389939	B8-24
389940	B8-24
389941	B8-24
405015	B17-34
407036	B15-112
407302	B15-112, B15-124
407305	B15-112, B15-124
407306	B15-124
416173	B19-38
416229	B19-38
416231	B19-38
416275	B19-38
419008	B15-113, B15-124
419150	B15-103, B15-111, B15-113, B15-124
419151	B15-113, B15-124
419152	B15-103, B15-111, B15-113, B15-124
419153	B15-113, B15-124
419154	B15-103, B15-111, B15-113, B15-124
419156	B15-103, B15-111
419158	B15-103, B15-111, B15-115, B15-124
419160	B15-103, B15-111, B15-115, B15-124

PART NUMBER INDEX

DODGE

Part Number	Page
419162	B15-103, B15-111, B15-115, B15-124
419164	B15-103, B15-111, B15-115, B15-124
419166	B15-103, B15-111, B15-115, B15-124
419168	B15-103, B15-111, B15-115, B15-124
419170	B15-103, B15-111, B15-115, B15-124
419171	B15-103, B15-111
419172	B15-103, B15-111, B15-115, B15-124
419174	B15-103, B15-111
419176	B15-103, B15-111, B15-115, B15-124
419178	B15-103, B15-111
419180	B15-113, B15-124
419181	B15-113, B15-124
419182	B15-113, B15-124
419183	B15-113, B15-124
419184	B15-112, B15-124
419185	B15-112, B15-124
419187	B15-112, B15-124
419188	B15-112, B15-124
420030	B16-47
421243	B13-16
421244	B13-16
421245	B13-16
421246	B13-16
421247	B13-16
421248	B13-16
421249	B13-16
421250	B13-16
421251	B13-16
421252	B13-16
421253	B13-16
421254	B13-16
421255	B13-16
421256	B13-16
421257	B13-16
421258	B13-16
421259	B13-16
421260	B16-31
421261	B16-31
421262	B16-31
421263	B16-31
421264	B16-31
421265	B15-101, B15-107, B16-31
421266	B15-101, B15-107, B16-31
421267	B15-101, B15-107, B16-31
421268	B15-101, B15-107, B16-31
421269	B15-101, B15-107, B16-31
421270	B15-101, B15-107, B16-31
421271	B15-101, B15-107, B16-31
421272	B15-101, B15-107, B16-31
421273	B15-101, B15-107, B16-31
421274	B15-101, B15-107, B16-31
421275	B15-101, B15-107, B16-31
421276	B15-101, B15-107
421277	B15-101, B15-107
421278	B15-101, B15-107
421279	B15-101, B15-107
421280	B15-101, B15-107
421282	B15-85, B15-92, B16-43
421283	B15-85, B15-92
421284	B15-85, B15-92
421285	B15-84, B15-92
421286	B15-84, B15-92
421287	B15-84, B15-85, B15-92, B16-45, B16-49
421288	B15-85, B15-92
421289	B15-85, B15-92
421290	B15-84, B15-92
421291	B15-84, B15-92
421292	B15-84, B15-92
421293	B15-85, B15-92
421294	B15-84, B15-92
421362	B13-21
421363	B13-21
421364	B13-21
421365	B13-21
421366	B13-21
421367	B13-21
421368	B13-21
421369	B13-21
421370	B13-21
421371	B13-21
421372	B13-21
421396	B16-31
421399	B16-35
421403	B16-45, B16-49
422001	B15-26, B15-32, B15-43, B15-54, B15-70, B16-34
422003	B15-26, B15-32, B15-43, B15-70, B16-34
422005	B15-26, B15-32, B15-43, B15-54, B15-70, B16-34
422007	B15-26, B15-32, B15-43, B15-70, B16-34
422009	B15-28, B15-32, B15-33, B15-43, B15-54, B15-70, B16-34
422011	B15-28, B15-33, B15-43, B15-54, B15-70, B16-34
422013	B15-28, B15-33, B15-43, B15-70, B16-34
422015	B15-28, B15-33, B15-43, B15-54, B15-70, B16-34
422017	B15-28, B15-33, B15-43, B15-54, B15-70, B16-34
422019	B15-28, B15-33, B15-43, B15-70, B16-34
422021	B15-28, B15-33, B15-43, B15-70, B16-34
422023	B15-28, B15-33, B15-43, B15-54, B15-70
422025	B15-28, B15-33, B15-43, B15-70
422027	B15-28, B15-33, B15-43, B15-54, B15-70
422029	B15-28, B15-30, B15-33, B15-34, B15-43, B15-70
422030	B15-30, B15-34, B15-43, B15-70, B16-43
422031	B15-30, B15-34, B15-43, B15-70, B16-43, B16-47
422035	B15-95, B15-98
422036	B15-85, B15-92
422054	B15-85, B15-92
422064	B15-28, B15-33, B15-43, B15-70
422123	B15-26, B15-32, B15-43, B15-70, B16-34
422124	B15-26, B15-32, B15-43, B15-70, B16-34
422134	B15-26, B15-32, B15-43, B16-34
422137	B15-26, B15-32, B15-43, B16-34
422140	B15-95, B15-98
422502	B15-84
422511	B15-84, B15-92
422525	B15-85, B15-93
422529	B15-84, B15-85
422531	B15-84, B15-85, B15-92
422535	B15-85, B15-91
422538	B15-31, B15-44, B15-71
422542	B15-30, B15-35
422543	B15-30, B15-34, B15-43, B15-70
422544	B15-30
422545	B15-31, B15-34, B15-41, B15-84, B15-91
422554	B15-45, B15-125
422555	B15-67
422556	B15-65
422560	B15-30, B15-35
422567	B15-31, B15-44, B15-71
422571	B15-67
422572	B15-65
422573	B15-31, B15-34, B15-41, B15-69, B15-84, B15-91
422576	B15-84, B15-93
422580	B15-84
422582	B15-84, B15-92
422588	B15-84, B15-91
422594	B15-31, B15-41, B15-69, B15-84, B15-91
422595	B17-29
422596	B17-29
422597	B17-29
422599	B17-29
422600	B17-29
422601	B17-29
422602	B17-29
422603	B17-29
422604	B11-45
422606	B15-31, B15-41, B15-69
422843	B15-85, B15-93
422844	B15-84, B15-85, B15-92
422978	B16-34
422979	B16-34
422980	B15-48, B15-50
422981	B15-48, B15-50
422982	B15-48, B15-50
422983	B15-48, B15-50
422984	B15-48, B15-50
422985	B15-48, B15-50
422986	B15-48, B15-49, B15-50, B15-51
422987	B15-49, B15-51
422988	B15-49, B15-51
422989	B15-49, B15-51
422990	B15-49, B15-51
422991	B15-49, B15-51
422992	B15-49, B15-51

PART NUMBER INDEX

Part Number	Page
422996	B16-31
423100	B15-98, B16-39
423102	B15-95, B15-98, B16-39
423104	B15-95, B15-98, B16-39
423106	B15-95, B15-98, B16-39
423108	B15-95, B15-98, B16-39
423110	B15-95, B15-98, B16-39
423112	B15-98
423114	B15-95, B15-98
423116	B15-95, B15-98
423118	B15-95, B15-98
423120	B15-95, B15-98
423122	B15-95, B15-98
423124	B15-112, B15-121, B16-37
423125	B15-112, B15-121, B16-37
423126	B15-112, B15-121, B16-37
423127	B15-112, B15-121, B16-37
423128	B15-112, B15-121, B16-37
423129	B15-112, B15-121, B16-37
423130	B15-112, B15-121, B16-37
423131	B15-112, B15-121, B16-37
423132	B15-114, B15-121, B16-37
423133	B15-114, B15-121
423134	B15-114, B15-121
423135	B15-114, B15-121
423136	B15-114, B15-121
423137	B15-114, B15-121
423138	B15-114, B15-121
423139	B15-114, B15-121
423140	B15-114, B15-121
423143	B15-112, B15-121, B16-37
423144	B15-112, B15-121, B16-37
423145	B16-37
423372	B15-95, B15-98, B16-39
423373	B15-95, B15-98, B16-39
423374	B16-39
423375	B16-39
423376	B16-39
430020	B4-102, B5-73, B6-62, B6-65, B6-67
430081	B17-34
430086	B17-34
430087	B17-34
430153	B18-29
430155	B18-13, B18-15, B18-17
430198	B18-13
430561	B18-15
430831	B18-15
431389	B18-15
431399	B18-15
432153	B18-13
432165	B18-21
432181	B18-13, B18-18, B18-23
432184	B18-13, B18-18, B18-23
432187	B18-13, B18-18, B18-23
432190	B18-13, B18-18, B18-22
432193	B18-13, B18-18, B18-22
432196	B18-13, B18-18, B18-22
432276	B18-21
432277	B18-21
432278	B18-21
432279	B18-21
432448	B18-21
433326	B18-29
434706	B18-31
434707	B18-31
434708	B18-31
434709	B18-31
434710	B18-31
434711	B18-31
434712	B18-31
434713	B18-31
434714	B18-31
434715	B18-31
434716	B18-31
434719	B18-11, B18-26
434720	B18-26
434721	B18-13, B18-18, B18-26
434722	B18-26
434725	B18-13, B18-18, B18-26
434726	B18-26
434727	B18-13, B18-15, B18-18, B18-26
434728	B18-26
434729	B18-15, B18-17, B18-18, B18-26
434730	B18-26
434735	B18-18, B18-26
434736	B18-26
434770	B18-24
434771	B18-24, B18-25
434772	B18-24, B18-25
434773	B18-24, B18-25
434774	B18-24
434775	B18-24
434797	B18-25
434835	B18-26
435001	B18-24
435002	B18-24
435003	B18-24
435004	B18-24
435005	B18-24
435006	B18-24
435007	B18-24
435008	B18-24
435009	B18-24
435010	B18-24
435011	B18-24
435012	B18-24, B18-25
435013	B18-24, B18-25
435014	B18-24
435015	B18-24, B18-25
435016	B18-24, B18-25
435017	B18-24
435018	B18-24, B18-25
435019	B18-24, B18-25
435021	B18-25
435027	B18-24
435028	B18-24
435029	B18-24
435030	B18-24
435031	B18-24
435032	B18-24
435033	B18-25
435035	B18-25
435036	B18-25
435037	B18-25
435038	B18-25
435039	B18-25
435040	B18-25
456225	B17-57
456226	B17-57
456227	B17-57
456228	B17-57
456229	B17-57
456230	B17-57
456231	B17-57
456232	B17-57
456234	B17-57
456235	B17-57
456236	B17-57
456237	B17-57
456238	B17-57
456239	B17-57
460901	B15-101, B15-111, B15-112, B15-124
460902	B15-101, B15-111, B15-112, B15-124
460903	B15-101, B15-111, B15-112, B15-124
460904	B15-101, B15-111
460905	B15-101, B15-111, B15-124
460906	B15-101, B15-111, B15-124
492598	B17-29
496400	B16-37
496401	B16-37
496402	B16-37
496403	B16-37
496404	B16-37
496405	B16-37
496406	B16-37
496407	B16-37
496408	B16-37
496409	B16-37
496410	B16-37
496411	B16-37
496412	B16-39
496413	B16-39
496414	B16-39
496415	B16-39
496416	B16-39
496417	B16-39
496418	B16-39
496419	B16-39
496420	B16-39
496421	B16-39
496422	B16-39
496423	B16-39
496424	B16-39
496425	B16-39
496426	B16-39
496427	B16-39
496428	B16-39
496429	B16-39
496430	B16-39
496431	B16-39
496432	B16-39
496433	B16-39
496434	B16-39
496435	B16-39
496436	B16-39
496437	B16-39
496438	B16-39
496439	B16-39
496440	B16-39
496442	B16-39
496443	B16-39
496444	B16-39
496446	B16-33
496447	B16-33
496448	B16-33
496449	B16-33
496450	B16-33
496451	B16-33
496452	B16-33
496453	B16-33
496454	B16-33
496455	B16-33
496456	B16-33
496457	B16-33
496458	B16-33

PART NUMBER INDEX

Part Number	Page
496459	B16-33
496460	B16-33
496461	B16-33
496462	B16-33
496464	B16-33
496465	B16-33
496466	B16-33
496467	B16-33
496468	B16-33
496469	B16-33
496470	B16-33
496471	B16-33
496472	B16-33
496473	B16-33
496474	B16-33
496475	B16-33
496476	B16-33
496477	B16-33
496478	B16-33
496479	B16-33
496480	B16-33
496482	B16-34
496483	B16-34
496484	B16-34
496485	B16-34
496486	B16-34
496487	B16-34
496488	B16-34
496489	B16-34
496490	B16-34
496491	B16-34
496492	B16-34
496493	B16-34
496494	B16-34
496495	B16-34
496496	B16-34
496497	B16-34
496498	B16-34
701659	B16-35
702830	B16-35
702844	B16-35
702857	B16-35
702867	B16-35
702883	B16-35
702893	B16-35
702904	B16-35
702907	B16-35
703619	B16-41
703628	B16-41
703644	B16-41
703656	B16-41
703661	B16-41
703670	B16-41
703679	B16-41
703689	B16-41
703694	B16-43, B16-47
703711	B16-43, B16-47
703725	B16-43, B16-47
703726	B16-43
703738	B16-43, B16-47
703739	B16-43, B16-47
703831	B16-45, B16-49
703840	B16-45, B16-49
703850	B16-45, B16-49
703866	B16-45, B16-49
703873	B16-45, B16-49
703890	B16-45, B16-49
703892	B16-45, B16-49
703903	B16-45, B16-49
703941	B16-34
703943	B16-31
703951	B16-34
703967	B16-31, B16-34
703971	B16-34
703976	B16-31
703982	B16-34
703989	B16-34
703990	B16-31
703996	B16-34
708959	B16-30, B16-34, B16-37, B16-39
708966	B16-30, B16-34, B16-37, B16-39, B16-41
708970	B16-30, B16-34, B16-37, B16-39, B16-41
708976	B16-30, B16-34, B16-37, B16-39, B16-41
708983	B16-30, B16-34, B16-37, B16-39, B16-41
708989	B16-41
709137	B16-30, B16-34
709140	B16-30, B16-34, B16-37, B16-39
709143	B16-30, B16-34, B16-37, B16-39
709146	B16-30, B16-34, B16-37, B16-39
709152	B16-30, B16-34, B16-37, B16-39
709162	B16-30, B16-34, B16-37, B16-39
709166	B16-30, B16-34, B16-37, B16-39
712225	B16-31, B16-35
713571	B16-30
713579	B16-30
713586	B16-30
713588	B16-30
713596	B16-30, B16-41
713600	B16-30
713603	B16-30, B16-41
713613	B16-30, B16-41
713616	B16-30
713622	B16-30, B16-41
713633	B16-30
713634	B16-30, B16-41
713641	B16-30, B16-41
713647	B16-30, B16-41
719372	B16-35
719373	B16-35
719374	B16-35
719375	B16-35
719376	B16-35
719378	B16-35
719379	B16-35
719380	B16-35
719381	B16-35
719382	B16-35
719383	B16-35
719385	B16-35
719397	B16-39
719400	B16-35
719406	B16-35
719408	B16-35
719419	B16-41
719420	B16-41
719421	B16-41
719422	B16-41
719423	B16-41
719425	B16-41
719429	B16-41
719432	B16-43, B16-47
719434	B16-43, B16-47
719437	B16-43, B16-47
719441	B16-43, B16-47
719443	B16-43, B16-47
719445	B16-43, B16-47
719446	B16-43, B16-47
719448	B16-43, B16-47
719480	B16-45, B16-49
719485	B16-45, B16-49
719489	B16-45, B16-49
719491	B16-45, B16-49
719492	B16-45, B16-49
719499	B16-34, B16-35
725341	B16-30
725342	B16-30, B16-41
725343	B16-30, B16-41
725344	B16-30, B16-41
725345	B16-30, B16-41
725346	B16-41
725357	B16-30
725358	B16-30
725359	B16-30
725360	B16-30
725361	B16-30
725363	B16-30
725364	B16-30
725366	B16-30
734772	B18-25
738145	B16-30
738146	B16-30
738147	B16-30
738148	B16-30
738149	B16-30
738151	B16-30
738152	B16-30
738154	B16-30
738155	B16-30
738157	B16-30, B16-41
738158	B16-30, B16-41
738160	B16-30, B16-41
738162	B16-30, B16-41
738163	B16-41
738164	B16-30
738165	B16-41
738166	B16-30
738167	B16-41
738168	B16-30
738169	B16-41
738170	B16-30
739145	B16-35
739150	B16-35
739153	B16-35
739154	B16-35
739329	B16-34
740381	B16-30, B16-34
740382	B16-30, B16-34
740383	B16-30, B16-34, B16-41
740384	B16-30, B16-34, B16-41
740452	B16-31, B16-35, B16-37, B16-39
740453	B16-31, B16-35, B16-37, B16-39
740623	B16-31
741031	B16-31
741550	B16-31
744975	B16-12
744976	B16-12
744977	B16-12
744978	B16-12
744979	B16-12
744980	B16-12
744981	B16-12
744982	B16-12
744983	B16-12
744984	B16-12
744985	B16-12
744986	B16-12
744987	B16-12
744988	B16-12
744989	B16-12
744990	B16-12
744991	B16-12
747025	B16-30, B16-33
747026	B16-30, B16-33, B16-37, B16-39
747027	B16-30, B16-33, B16-37, B16-39
747028	B16-30, B16-33, B16-37, B16-39
747029	B16-30, B16-33, B16-37, B16-39

PART NUMBER INDEX

Part Number	Page
747030	B16-30, B16-33, B16-37, B16-39
747031	B16-30, B16-33, B16-37, B16-39
747032	B16-30, B16-33, B16-37
747033	B16-30, B16-33, B16-37, B16-39
747034	B16-30, B16-33, B16-37, B16-39
747035	B16-30, B16-33, B16-37, B16-39
747036	B16-30, B16-33, B16-37, B16-39
747037	B16-30, B16-33, B16-37, B16-39
747038	B16-30, B16-33
747039	B16-30, B16-33
747040	B16-30, B16-33
747041	B16-30, B16-33
747042	B16-41
747043	B16-41
747044	B16-41
747045	B16-41
747046	B16-41
747047	B16-41
747048	B16-41
747049	B16-41
747105	B16-31, B16-34, B16-35
747107	B16-37, B16-39
747108	B16-31, B16-34, B16-35
747110	B16-37, B16-39
747111	B16-31, B16-34, B16-35
747114	B16-37, B16-39
747115	B16-31, B16-34, B16-35
747117	B16-37, B16-39
747118	B16-31, B16-34, B16-35
747120	B16-37, B16-39
747121	B16-31, B16-34, B16-35
747122	B16-37, B16-39
747123	B16-31, B16-34, B16-35
747124	B16-37
747125	B16-31, B16-34, B16-35
747126	B16-37, B16-39
747128	B16-31, B16-34, B16-35
747129	B16-37, B16-39
747130	B16-31, B16-34, B16-35
747131	B16-37, B16-39, B16-41
747132	B16-31, B16-34, B16-35
747135	B16-37, B16-39
747136	B16-41
747137	B16-31, B16-34, B16-35
747138	B16-41
747139	B16-37, B16-39
747141	B16-31, B16-34
747142	B16-41
747143	B16-31, B16-34
747145	B16-41
747146	B16-31, B16-34
747148	B16-41
747149	B16-31, B16-34
747150	B16-41, B16-45, B16-49
747151	B16-41
747152	B16-31, B16-34
747154	B16-45, B16-49
747155	B16-43, B16-47
747156	B16-45, B16-49
747157	B16-45, B16-49
747159	B16-43, B16-47
747161	B16-43, B16-47
747162	B16-45, B16-49
747164	B16-45, B16-49
747166	B16-43, B16-47
747167	B16-43, B16-47
747168	B16-45, B16-49
747170	B16-45, B16-49
747171	B16-43, B16-47
747172	B16-43, B16-47
747173	B16-45, B16-49
747174	B16-43, B16-47
747175	B16-45, B16-49
747177	B16-35
747178	B16-35
747179	B16-35
747180	B16-35
747181	B16-35
747182	B16-35
747183	B16-35
747184	B16-35
747185	B16-35
747186	B16-35
747187	B16-35
747188	B16-35
747189	B16-31, B16-35
747190	B16-31, B16-35
747191	B16-31, B16-35
747192	B16-31, B16-35
747193	B16-31, B16-35
747194	B16-31, B16-35
747195	B16-31, B16-35
747199	B16-26
747201	B16-26
747202	B16-26
747203	B16-26
747204	B16-26
747205	B16-26
747206	B16-26
747207	B16-26
747208	B16-26
747209	B16-26
747210	B16-26
747211	B16-26
747212	B16-26
747213	B16-26
747214	B16-26
747215	B16-26
747216	B16-26
747217	B16-26
747218	B16-26
747219	B16-26
747220	B16-26
747221	B16-26
747222	B16-26
747223	B16-26
747224	B16-26
747225	B16-26
747226	B16-26
747227	B16-26
747228	B16-26
747229	B16-26
747230	B16-26
747231	B16-26
747232	B16-26
747233	B16-26
747234	B16-26
747235	B16-26
747236	B16-26
747237	B16-26
747238	B16-26
747239	B16-26
747240	B16-26
747241	B16-26
747242	B16-26
747243	B16-26
747244	B16-26
747245	B16-26
747246	B16-26
747247	B16-26
747248	B16-26
747249	B16-26
747250	B16-26
747328	B16-34
747329	B16-34
747330	B16-34
747331	B16-34
747332	B16-34
747333	B16-34
747334	B16-34
747335	B16-34
747336	B16-34
747337	B16-34
747338	B16-34
747339	B16-34
747340	B16-34
747341	B16-34
747342	B16-34
747343	B16-34
747344	B16-34
747384	B16-34
747385	B16-34
747386	B16-34
747387	B16-34
747388	B16-34
747389	B16-34
747390	B16-34
747391	B16-34
747392	B16-34
747393	B16-34
747394	B16-34
747395	B16-34
747396	B16-34
747397	B16-34
747398	B16-34
747399	B16-34
747400	B16-34
747600	B16-45
747601	B16-45
747602	B16-43
747603	B16-45
747604	B16-43, B16-45
747605	B16-43
747606	B16-45
747607	B16-43, B16-45
747608	B16-43
747609	B16-45
747610	B16-43, B16-45
747611	B16-43
747612	B16-45
747613	B16-43
747614	B16-45
747622	B16-49
747623	B16-49
747624	B16-47
747625	B16-49
747626	B16-47, B16-49
747627	B16-47
747628	B16-49
747629	B16-47, B16-49
747630	B16-47
747631	B16-49
747632	B16-47, B16-49
747633	B16-47
747634	B16-49
747635	B16-47
747636	B16-49
747666	B16-43, B16-47
747667	B16-43, B16-45, B16-47, B16-49
747668	B16-43, B16-47
747669	B16-43, B16-45, B16-47, B16-49
747670	B16-43, B16-47
747671	B16-43, B16-45, B16-47, B16-49
747672	B16-43, B16-47

PART NUMBER INDEX

Part Number	Page
747673	B16-43, B16-47
747681	B16-45, B16-49
747682	B16-45, B16-49
747683	B16-45, B16-49
747684	B16-45, B16-49
747686	B16-45, B16-49
747688	B16-45, B16-49
747690	B16-45, B16-49
747706	B16-43, B16-47
747707	B16-43, B16-45, B16-47, B16-49
747708	B16-43, B16-47
747709	B16-43, B16-45, B16-47, B16-49
747710	B16-43, B16-47
747711	B16-43, B16-45, B16-47, B16-49
747712	B16-43, B16-47
747713	B16-43, B16-47
747721	B16-45, B16-49
747722	B16-45, B16-49
747723	B16-45, B16-49
747724	B16-45, B16-49
747726	B16-45, B16-49
747728	B16-45, B16-49
747730	B16-45, B16-49
747746	B16-45, B16-49
747747	B16-45, B16-49
747748	B16-43, B16-47
747749	B16-45, B16-49
747750	B16-43, B16-45, B16-47, B16-49
747751	B16-43, B16-47
747753	B16-43, B16-45, B16-47, B16-49
747754	B16-43, B16-47
747756	B16-43, B16-45, B16-47, B16-49
747757	B16-43, B16-47
747759	B16-43, B16-47
747760	B16-45, B16-49
747900	B16-12
747901	B16-12
747904	B16-12
747905	B16-12
747908	B16-12
747909	B16-12
747912	B16-12
747913	B16-12
747916	B16-12
747917	B16-12
747920	B16-12
747921	B16-12
747924	B16-12
747925	B16-12
747928	B16-12
747929	B16-12
747932	B16-12
747933	B16-12
747936	B16-12
747937	B16-12
747940	B16-12
747941	B16-12
747944	B16-12
747945	B16-12
747948	B16-12
747949	B16-12
747952	B16-12
747953	B16-12
747956	B16-12
747957	B16-12
747960	B16-12
747961	B16-12
747964	B16-12
747965	B16-12
747968	B16-12
747969	B16-12
747972	B16-12
747973	B16-12
747976	B16-12
747977	B16-12
747980	B16-12
747981	B16-12
747984	B16-12
747985	B16-12
747988	B16-12
747989	B16-12
747992	B16-12
747993	B16-12
747996	B16-12
747997	B16-12
748000	B16-12
748001	B16-12
748004	B16-12
748005	B16-12
748008	B16-12
748009	B16-12
748012	B16-12
748013	B16-12
1029557	B2-58
B48371	B18-21
C11235	B18-21
C14203	B18-21

KEYWORD INDEX

A

Accessories
- E-Z Kleen B2-77
- Extreme Duty Setscrew Ball Bearing B3-41
- Extreme Duty Setscrew Ball Bearings B3-42
- Setscrew Ball Bearings B4-98
- Setscrew VSC Ball Bearings B8-26
- Ultra Kleen B1-35

Air Handling
- D-Lok® Ball Bearings B6-12
- D-Lok Ball Bearings B6-62
- Eccentric Collar B7-44
- Eccentric SXV Collar B9-36
- Grip Tight B5-12
- Setscrew Ball Bearings B4-98

Anti-Rotation Pin
- D-Lok Ball Bearings B6-4
- Eccentric Collar B7-4
- Setscrew Ball Bearings B4-4

B

Ball Bearing End Covers
- D-Lok Ball Bearings B6-62
- Eccentric SXV Collar B9-37
- Grip Tight B5-73
- Setscrew Ball Bearings B4-106
- Setscrew Ball Bearings B4-3

Bearing Life Adjustment Factor

Bearing Load Calculations

C

Centrifugal Force

Coatings
- D-Lok Ball Bearings B6-62
- Setscrew Ball Bearings B4-98

Coefficients of Friction "f" B20-39

Common Conversion Factors B20-28

Concentric Clamp Collar B6-3

Concentric Clamp Collar – D-Lok Ball Bearings B6-3

Conveyor Belt FPM to RPM B20-11

D

D-Lok® Ball Bearings B6-1

Dimensions
- Imperial – IP, ISAF ISN and ISNX B14-30
- Plummer Blocks B16-13
  - Imperial Spanner B16-22
  - ISN Bearing Inserts B16-16
  - ISN End Covers B16-21
  - ISN Lockplate Kits B16-21
  - ISN Plummer Blocks with Labyrinth Seals B16-15
  - ISN Plummer Blocks with Trident Seals B16-13
  - ISNX Bearing Inserts B16-18
  - SDX B16-42
  - SDXD B16-46
  - SNX B16-26
- S-2000 B12-14
  - Bearing Inserts B12-48
  - End Covers B12-50
- UNISPHERE II B13-12

Ductile
- E Family – Inch B10-43

E

E-Family Bearings B10-1

E-Z Kleen Mounted Bearings B2-1

Easy Selection
- E-Z Kleen B2-12
- Extreme Duty Setscrew Ball Bearings B3-3
- Ultra Kleen B1-7

Eccentric Collar Ball Bearings B7-1

Eccentric SXV Collar Ball Bearings B9-1

Engineering / Technical B20-1

English Standard Measures B20-23

Expansion of Shafting B20-17

Extreme Duty Setscrew Ball Bearings B3-1

F

Features/Benefits
- Features/Benefits B1-3
- D-Lok Ball Bearings B6-3
- E-Z Kleen B2-3
- Eccentric Collar B7-3
- Extreme Duty Setscrew Ball Bearings B3-2
- Grip Tight Adapter Ball Bearings B5-2
- Imperial – IP, ISAF and ISN
  - Imperial-HD B14-6
  - Imperial-IP B14-4
  - ISAF B14-10
  - ISN and ISNX HYD B14-12
- Plummer Blocks
  - ISN and ISNX B16-3
  - Seals B16-25
  - SNX B16-23
- S-2000 B12-2, B12-6
- Setscrew Ball Bearings B4-3
- Setscrew VSC Ball Bearings B8-2
- Sleeve Bearings B17-2
- Sleevoil B18-3
- Specialty Tapered
  - All Steel B11-4
  - Special Duty B11-3
  - Type C B11-2

KEYWORD INDEX

Take-Up Frames B19-2
Bronzoil B19-4
Center Pull B19-3
Heavy Duty B19-5
Light Duty B19-4
Narrow Slot B19-2
Telescoping B19-2
Top Angle B19-3
TPHU B19-3
Wide Slot B19-2
Type E-Xtra, Double-Interlock, Type K/TAF/EXL Bearings B10-2
UNISPHERE II B13-2
Ultra Kleen B1-3
Unified SAF
SAF and SDAF Pillow Blocks B15-3
SAF with Split-Spher Bearing B15-5
SAF-XT and SAFS B15-6
Eccentric SXV Collar B9-2
Flywheel Formulas B20-35
Formulas and Constants B20-34

G

Grip Tight® Ball Bearings B5-1

H

Hardness Comparison B20-39
How to Order
D-Lok Ball Bearings B6-5
E Family
Type E-Xtra, Type K, Double-Interlock, TAF and EXL B10-9
TAF - Smart Stock Selections B10-67
E-Z Kleen B2-8
Eccentric Collar B7-5
Grip Tight B5-4
Imperial
IP, ISAF and ISN B14-8
ISN and ISNX HYD B14-13
Setscrew Ball Bearings B4-5
Sleeve Bearings B17-4
Sleevoil B18-7
Specialty Tapered
All Steel B11-47
Special Duty Hinged Cap B11-21
Type C B11-6
Take-Up Frames B19-6
Ultra Kleen B1-6
Unified SAF B15-7
USAF B15-54

I

Imperial – IP, ISAF and ISN B14-1
Installation
Specialty Tapered
All Steel B11-51
Special Duty B11-24
Type E Family B10-13

L

Lubrication
D-Lok Ball Bearings B6-7
Eccentric Collar B7-6
SXV Collar B9-3, B9-36
Grip Tight B5-5
Imperial
IP, ISAF ISN and ISNX B14-15
ISNX B14-16
S-2000 B12-8
Setscrew Ball Bearings B4-7, B4-98
Specialty Tapered B11-21, B11-24
All Steel B11-51
Type E Family B10-13
Type E Family Bearings B10-72
Unified SAF B15-20
Split-Spher B15-76
UNISPHERE II B13-5

M

Maintenance
Specialty Tapered B11-24
All Steel B11-51
Type E Family B10-13
Material Characteristics B20-12
Mathematical Equations B20-36
Metric System of Measurements B20-26
Misalignment
D-Lok Ball Bearings B6-6
Eccentric Collar B7-6
Grip Tight B5-5
Imperial – IP, ISAF ISN and ISNX B14-15
S-2000 B12-8
Setscrew Ball Bearings B4-7
UNISPHERE II B13-5
Modifications/Accessories
D-Lok Ball Bearings B6-62
Eccentric Collar B7-44
Eccentric SXV Collar B9-36
Sleevoil B18-22
Type E-Xtra End Closure Kits – Inch B10-65

KEYWORD INDEX

Type E-Xtra, Type K, Double-Interlock, TAF –
E-Tect Seal Kits B10-64
Type K, Double-Interlock and TAF End Covers B10-66

N

Nomenclature
D-Lok Ball Bearings B6-5
Eccentric Collar B7-5
Grip Tight B5-4
Imperial – IP, ISAF and ISN
Imperial-IP B14-9
ISAF B14-11
ISN and ISNX HYD B14-13
Plummer Blocks – ISN B16-6
S-2000 B12-5
Setscrew Ball Bearings B4-102
Sleeve Bearings B17-5
Sleevoil B18-7
Specialty Tapered B11-22, B11-48
Type C B11-6
Take-Up Frames B19-7
Type E-Xtra, Type K, Double-Interlock, TAF and EXL B10-10
Unified SAF B15-8
UNISPHERE II B13-3

O

Oil Level and Filtration System – Sleevoil B18-30
Oil Ring – Sleevoil B18-27
Oil Viscosity Classification B20-22
Overhung Loads B20-36

P

Plummer Blocks B16-1
Proguard Plus Seal B4-98
Proguard Plus Seal – D-Lok® B6-62
Proguard Plus Seal – Setscrew Ball Bearings B4-98
Properties of Sections B20-38

R

Radial Loads – Inch and Metric B9-4
Related Products
Ball Bearing End Covers B4-102
D-Lok B6-65
Eccentric Collar B7-47
Eccentric SXV Collar B9-37
Grip Tight B5-70
Setscrew Ball Bearings – High Temp SC and SCM B4-99

S

S-2000 B12-1
Seals
Seals – D-Lok Ball Bearings B6-62
Eccentric SXV Collar B9-36
Setscrew Ball Bearings B4-3
Unified SAF B15-19
Selection
D-Lok Ball Bearings B6-6
Eccentric Collar B7-6
Eccentric SXV Collar B9-3
E-Z Kleen B2-9
Grip Tight B5-5
Imperial – IP, ISAF ISN and ISNX B14-14
Imperial-HD B14-27
Imperial-IP B14-26
ISAF B14-28
ISNX B14-16
Imperial Spherical Roller Bearings B14-17
Imperial Housing Styles B16-7
Plummer Blocks
ISN Easy Selection B16-9
ISN Plummer Blocks with Labyrinth Seals B16-14
ISN Plummer Blocks with Trident Seals B16-12
ISN Ratings B16-8
S-2000 B12-7
Setscrew Ball Bearings B3-5, B4-6
Setscrew VSC Ball Bearings B8-3
Sleeve Bearings B17-6
Babbitted and Bronze-Bushed B17-34
Specialty Tapered
Special Duty B11-23
Type C B11-7
TAF - Smart Stock Selections B10-67
Type E-Xtra - Metric B10-68
Type E-Xtra, Type K, Double-Interlock, TAF and EXL B10-11
Unified SAF B15-19
Unified Pillow Block B15-13
Selection –Specialty Tapered – All Steel B11-49
UNISPHERE II B13-4
Selection/Dimensions
Cool Lube 2 System B15-131
D-Lok B6-10
E-Z Kleen B2-26
Eccentric Collar B7-12
Eccentric SXV Collar B9-6
Extreme Duty Setscrew Ball Bearings B3-8
Grip Tight B5-8
Grip Tight – Thin Wall Adapter Ball Bearings B5-76
Setscrew Ball Bearings B4-12
Setscrew VSC Ball Bearings B8-8
Sleeve Bearings B17-10, B19-43
Babbitted B17-38
Bronze-Bushed B17-50
Bronzoil B17-54
Shaft Collars B17-57

KEYWORD INDEX

- Sleevoil
  - R Series B18-10
  - RTL Series B18-18
  - RXT Series B18-20
- Specialty Tapered
  - All Steel B11-54
  - Special Duty Flange Bearing B11-36
  - Special Duty Hinged Cap B11-42
  - Special Duty Pillow Block B11-30
  - Special Duty Units B11-38
  - Type C B11-8
- Take-Up Frames
  - Spherical Roller Bearings B19-25, B19-29
  - Take-Up Bearings – Type A & B B19-45
  - Telescoping B19-15
  - Take-Up Frames B19-8
  - Bronzoil B19-44
  - Center Pull B19-26
  - Heavy Duty Protected Screw B19-36
  - Light Duty Protected Screw B19-30
  - Narrow Slot B19-8
  - Top Angle Protected Screw B19-20
  - TPHU B19-24
  - Wide Slot B19-11
  - Tapered Roller Bearings B19-29
- Type E-Xtra, Type K, Double-Interlock, TAF and EXL B10-21
- Unified SAF
  - SAF-XT and SAFS B15-55
  - Split-Spher B15-72
  - USAF B15-94
  - USAF 500 B15-26
  - USDAF B15-82
- Ultra Kleen B1-15

Setscrew Ball Bearings B4-1

Setscrew VSC Ball Bearings B8-1

Shafts
- Shaft Bearings B20-17
- Shaft Couplings B20-17
- Shaft Diameters – Selection B20-15
- Shaft Keyseats B20-17
- Shafting B20-14
  - Other Than Standard B20-17
  - Steel – Weights and Properties B20-20
  - Shafting Expansion B20-19
  - High Speed B20-17
  - Stepped B20-17

Sleeve Bearings B17-1

Sleevoil® B18-1

Specialty Tapered Products B11-1

Specification
- E-Family B10-8
- Specialty Tapered – Type C B11-5
- Imperial – IP, ISAF and ISN B14-5
- Imperial – IP, ISAF and ISN – Imperial-HD B14-7
- S-2000 B12-4
- Sleevoil B18-7
- Specialty Tapered
  - All Steel B11-46
  - Special Duty Hinged Cap B11-20
- Unified SAF B15-7
- UNISPHERE II B13-3

Sleeve Bearings B17-4

Strength and Physical Properties of Various Metals B20-37

T

Take-Up Frames B19-1

Torque and Horsepower Equivalents B20-36

Trigonometric Formula B20-40

U

U. S. Standard Sheet Metal Gages B20-39

Ultra Kleen Mounted Bearings B1-1

Unified SAF B15-1

UNISPHERE II B13-1

V

V-Belt Cross Sections - Nominal B20-11

V-Belt Drive Formulas B20-10

Vibration Detector Adapter Kit – Sleevoil B18-29

Vibration Frequencies B20-2

For Additional information and Dodge® Product Manuals on Dodge Bearing Products, Dodge Gearing Products or Dodge PT Components:

> contact your local authorized Dodge Distributor

> contact us at **864.297.4800**

> visit us on the web at
www.dodgeindustrial.com

DODGE



Dodge Industrial, Inc.
1061 Holland Road, Simpsonville, SC 29681
+1 864 297 4800

dodgeindustrial.com

Dodge Industrial, Inc. reserves all rights in this document and in the subject matter and illustrations contained therein. We reserve the right to modify contents without prior notice and do not accept responsibility for potential errors or possible lack of information in this document. Any reproduction, disclosure to third parties or utilization of its contents – in whole or in parts – is forbidden without prior written consent of Dodge Industrial, Inc.

© Copyright Dodge Industrial, Inc. All rights reserved. Specifications subject to change without notice.
An RBC Bearings company

CA3000B