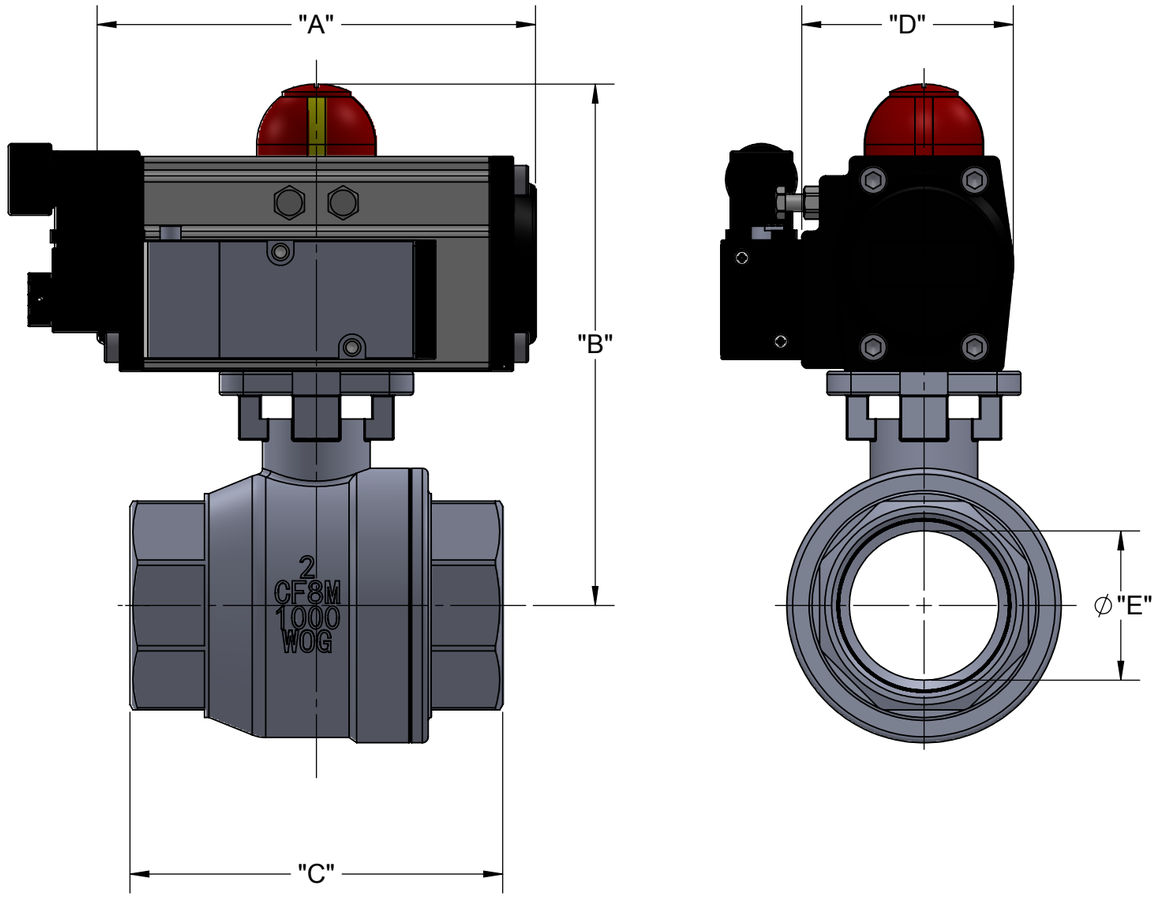


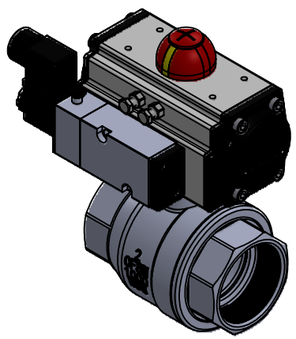

# **BA260LDA Air-to-Air Pneumatic Ball Valve** 1/4" - 3" NPT

- CF8M (316 SS) two-piece full port
- 316 SS ball and stem
- TFM 1600 PTFE seats and packing
- 1000 psi rated @ 100° F
- Temp range:  -20° to 450° F 50 psi SWP
- Double-acting actuator sized for 80 psi air supply
- 120V four-way NEMA 4/4x NAMUR mounted solenoid
- For on/off service

| Air-to-Air Actuator Assembly Dimensions | | | | | | |
|---|---|---|---|---|---|---|
| Valve | Model | Dimensions in inches | | | | |
| Size | Actuator | A '' | B " | C " | D " | E " |
| 1/4 | MC2C | 5.79 | 5.27 | 2.64 | 2.81 | 0.42 |
| 3/8 | MC2C | 5.79 | 5.27 | 2.64 | 2.81 | 0.50 |
| 1/2 | MC2C | 5.79 | 5.27 | 2.64 | 2.81 | 0.59 |
| 3/4 | MC2C | 5.79 | 5.55 | 2.76 | 2.81 | 0.79 |
| 1 | MC2C | 5.79 | 5.90 | 3.35 | 2.81 | 0.98 |
| 1 1/4 | MC2C | 5.79 | 6.10 | 3.70 | 2.81 | 1.26 |
| 1 1/2 | MC3C | 6.61 | 7.03 | 4.13 | 3.27 | 1.50 |
| 2 | MC5C | 7.24 | 7.77 | 4.92 | 3.74 | 1.97 |
| 2 1/2 | MC7C | 8.03 | 9.07 | 6.10 | 4.05 | 2.50 |
| 3 | MC10C | 10.31 | 9.68 | 6.81 | 4.27 | 2.99 |

UNITS in [mm] PRIMARY / SECONDARY

THIRD ANGLE PROJECTION

THIS PRINT IS THE PROPERTY OF MILWAUKEE VALVE COMPANY, INC. AND REPRESENTS A PROPIETARY ARTICLE IN WHICH MILWAUKEE VALVE COMPANY, INC. RETAINS ANY AND ALL PATENTS AND OTHER RIGHTS, INCLUDING EXCLUSIVE RIGHTS OF USE AND/OR MANUFACTURE AND/OR SALE. POSSESION OF THIS PRINT DOES NOT CONVEY ANY PERMISSION TO REPRODUCE PRINT OR MANUFACTURE THE ARTICLE OR ARTICLES SHOWN THEREIN; SUCH PERMISSION TO BE GRANTED ONLY BY SPECIFIC AUTHORIZATION IN WRITING, SIGNED BY AN OFFICER OR OTHER AUTHORIZED AGENT OF MILWAUKEE VALVE COMPANY INC.

| DEPARTMENT | | INTL ECN |
|---|---|---|
| ENGINEERING | | - |
| DWN | 10/18/2016 | KJS |
| CHKD | | |
| APVD | | |
| MDLD | | |

**MILWAUKEE VALVE CO., INC.**
NEW BERLIN, WI 53151-7301

TITLE
2 FULL PORT PNEUMATIC
STAINLESS BALL VALVE

| REF NO | PC NO | SIZE | CAGE CODE | DRAWING NO | REV |
|---|---|---|---|---|---|
| | - | B | 76364 | 2" 1000 WOG | 1 |

REG APVL | SCALE: 1:4 | MASS UNITS: | SHEET 1 OF 1