MILWAUKEE VALVE

C SERIES PNEUMATIC ACTUATORS



INSTRUCTIONS OF ASSEMBLY AND MAINTENANCE

GENERAL

This instruction manual contains important information regarding the installation, operation, maintenance and storage for rack and pinion pneumatic actuators. Please read these instructions carefully and save them for future reference. It is important that only properly trained personal disassemble or assemble the actuator.

DESCRIPTION OF ACTUATORS SERIES "C"

The Aluminum pneumatic actuator is a 90° Double acting or Spring return rack and pinion system, which has been designed for the actuation of all type of 1/4 turn valves or 1/4 turn applications.

The special finish of the interior surface of the body (Ra 0,4 - 0,6 um) together with the use of antifriction pads manufactured in material of a very low coefficient of friction (LAT LUB), mounted in the pistons, prevent metal-metal contact.

ALPHA actuators enjoy a long and maintenance free life.

Operating Media

- Clean, dry or lubricated compressed air
- Light hydraulic oil
- Inert and non corrosive gas (to consult)

The maximum particle size must not exceed 30 um.

Supply Pressure

Minimum: 1 bar

Maximum: 10 bar (150 psig)

Operating Temperature

Standard (NBR O-ring): -20°C~+80°C

Low temperature (Silicon O-ring): -35°C~+80°C

High temperature (Viton O-ring): -15°C~+150°C

Caution: For low and high temperature service, special grease is required. High and low temperature will vary the output torque of the actuator.

LUBRICATION

The actuator is supplied ready-lubricated no further lubrication is required.

- Do not operate the actuator by using inflammable, oxidating and corrosive, explosive or instable gases.
- Operating the actuator beyond its stated maximum operating limits of pointed out temperature, pressure or recommend operating media, can cause personal safety risks involving death or injury, and or damage internal components as well as cause damage to actuator housing.

PRINCIPLE OF OPERATION

Double acting actuator

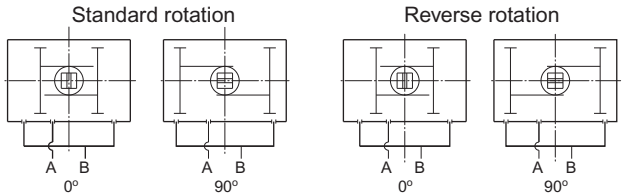

Standard rotation:

Air to port A forces the pistons outwards, causing the pinion to turn counterclockwise while the air is being exhausted from port B.

Air to port B forces the pistons inwards, causing the pinion to turn clockwise while the air is being exhausted from port A.

Reverse rotation:

Air to port A forces the pistons outwards, causing the pinion to turn clockwise while the air is being exhausted from port B.

Air to port B forces the pistons inwards, causing the pinion to turn counterclockwise while the air is being exhausted from port A.

Spring return actuator

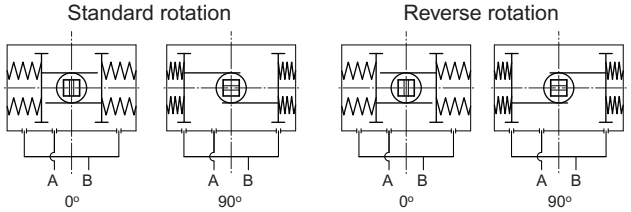

Standard rotation:

Air to port A forces the pistons outwards, causing the springs to compress, the pinion turns counterclockwise while air is being exhausted from port B.

Loss of air pressure on port A, the stored energy in the springs forces the pistons inwards. The pinion turns clockwise while air is being exhausted from port A.

Reverse rotation:

Air to port A forces the pistons outwards, causing the springs to compress, the pinion turns clockwise while air is being exhausted from port B.

Loss of air pressure on port A, the stored energy in the springs forces the pistons inwards. The pinion turns counterclockwise while air is being exhausted from port A.

Assembling the actuator and reversing the position of the pistons can easily reverse the standard rotation.

ASSEMBLY OF VALVE

Pneumatic actuators are fitted with a double square "star" pattern drive shaft and a mounting bolt pattern conforming to ISO Standards. This allows the actuator to be fitted to valves in increments of 90°, allowing mounting alignment either inline or across the line of the pipe work, enabling the most efficient use of space without the position affecting the actuators basic operation.

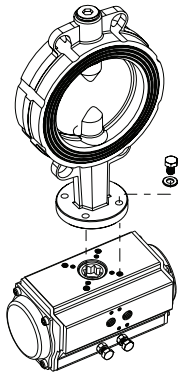

1. Fit the square of the valve directly into the square of the actuator.
2. Bolt together through the valve ISO pad.

Following should be noted prior to assembly to valves:

- Determine the desired operation of the assembly, Normally closed valve NC, or Normally open NO.
- Check that valve and actuator are in the same position (open or closed).
- Check the correct positioning (alignment) of all the elements of the group, valve, connection piece, bracket and actuator.
- Assemble ensuring the mounting screws correctly distribute the effort in proportionally.
- Ensure all position indicators are correctly adjusted and show the correct position.

IMPORTANT: When using a spring return actuator for a fail safe operation, ensure that when air or electricity failure occurs the direction of rotation is correct for your application.

DISASSEMBLY OF THE ACTUATOR

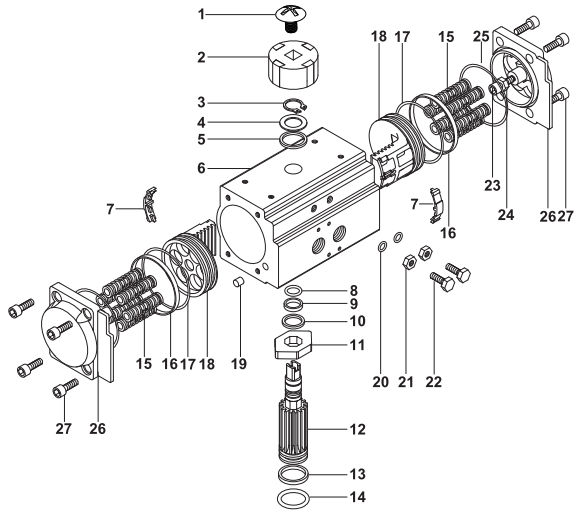

No.	Description	Qty.	Material
1.	Indicator screw	1	Stainless steel(304)
2.	Indicator	1	Plastic(ABS)
3.	Circlip	1	Stainless steel(304)
4.	Thrust washer	1	Stainless steel(304)
5.	Outside washer	1	polyoxymethylene
6.	Body	1	Extruded aluminum alloy(6005-T5)
7.	Guide(piston)	2	polyoxymethylene
8.	O-ring(pinion top)	1	NBR
9.	Bearing(pinion top)	1	polyoxymethylene
10.	Inside washer	1	polyoxymethylene
11.	Cam	1	#45
12.	Pinion	1	#45
13.	Bearing (pinion bottom)	1	polyoxymethylene
14.	O-ring(pinion bottom)	1	NBR
15.	Spring	0~12	Spring steel
16.	Bearing (piston)	2	polyoxymethylene
17.	O-ring(piston)	2	NBR
18.	Piston	2	Die-Cast aluminum(101A)
19.	Plug	2	NBR
20.	O-ring(adjust screw)	2	NBR
21.	Nut (adjust screw)	2	Stainless steel(304)
22.	Adjust screw	2	Stainless steel(304)
23.	Stop screw	2	Stainless steel(304)
24.	Nut (stop screw)	2	Stainless steel(304)
25.	O-ring(end cap)	2	NBR
26.	End-cap	2	Die-Cast aluminum(ADC12)
27.	End-cap screw	8	Stainless steel(304)

1. Safely disconnect all electric power and supply lines connected to the actuator and or accessories.
2. Disassemble all the accessories of the actuator (solenoid, limit switch box, extra.)
3. Disassemble the actuator off the valve.
4. Remove indicator screw (1) if fit, Lift position indicator (2) off shaft, it may be necessary to pry gently with a screwdriver.
5. Unscrew the end caps screw (27)

Caution: When the actuator is a spring return unit, make sure that the actuator is in the failed position before disassembling.

6. Remove stroke adjustment screw (22) together with nut (21) and O'rings (20)
7. Remove the end caps (26)
8. To rotate the pinion (12) counterclockwise so that the pistons (18) will exit the body (6)

Caution: Air pressure should not be used to remove the pistons from body.

9. Remove the circlip (3) and the washers (4) and (5)
10. Remove the pinion (12) cam (11) and internal washer (10) from the body of the actuator, with downward force to the top of pinion
11. Clean the components of the actuator perfectly

INSPECTION AND MAINTENANCE

12. Inspect the components of the actuator for wear or damage and replace where necessary
13. Replace

On the pinion: Circlip (3), O'ring (8) and (14), washer (5), Pinion bearing (9) and (13)
On the end caps: End cap O'ring (25)
On the pistons: O'ring (17) Piston guides (7) Bearing (16)

All springs where fitted should be replaced during periodic maintenance.

MAINTENANCE IS RECOMMENDED TO BE CARRIED OUT EACH 500.000 COMPLETE CYCLES.

RECOMMENDED REPLACEMENT PARTS

PINION WASHER (5)
PINION CIRCLIP (3)
PINION UPPER O'RING (8)
PINION LOWER O'RING (14)
PINION UPPER BEARING (9)
PINION LOWER BEARING (13)
STROKE ADJUSTMENT SCREW O'RINGS (20)
END CAP O'RING (25)
PISTON O'RING (17)
PISTON BEARING (16)
PISTON GUIDE (7)
SPRING CARTRIDGE (15)

ASSEMBLY OF THE ACTUATOR

VERY IMPORTANT before beginning the assembly to check always that all the O'rings and gaskets that is compatible with buna or nitrile rubbers are properly housed in their lodgings, and all the components are greased correctly using a standard commercial grease.

1. Refit the pinion (12) in the body of the actuator (6) ensuring the cam (11) is correctly fit during assembly. Ensure the pinion will rotate in anticlockwise-clockwise when the stroke adjustment screws (22) are refitted.
2. Fit washers (5), (4) and circlip (3) to the top of pinion.
3. Refit the pistons (18) in the body (6) keeping in mind that both pistons should engage the gear of the pinion (12) at the same time.
4. For standard rotation assembly, Rotating the pinion (12) about 40~50° in a clockwise direction until the pistons are correctly retracted. Check that the pinion output end is square to the body and is in the correctly aligned.

Note: Obtaining the correct gear tooth and piston alignment could require more than one attempt.

5. Mount the end cap (26) to the body and tighten the screws (27) distributing the force evenly until the end cap is securely home. Caution should be taken not to "pinch" the o'rings during this assembly procedure. In spring return actuators, it will be necessary to insert the spring cartridges appropriately in their lodgings of the end caps according to the quantity of the springs you use (see detail).

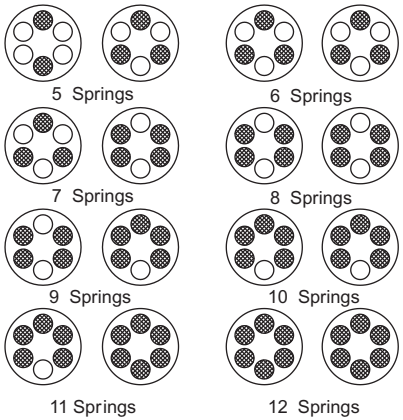

6. Fit the stroke adjustment screw (22) with the nut (21) and o'ring (20) in the body.

ENDSTOP ADJUSTMENT - CLOCKWISE

(Right Adjusting screw)

- Slacken the security nut (21) of the right hand external stroke adjustment screw
- Tighten or slacken the external stroke adjustment screw(22) until reaching the required position.
- Tighten the security nut (21) of the right hand external stroke adjustment screw.

ENDSTOP ADJUSTMENT - COUNTERCLOCKWISE

(Left Adjusting screw)

- Slacken the security nut (21) of the left hand external stroke adjustment screw
- Tighten or slacken the external stroke adjustment screw(22) until reaching the required position.
- Tighten the security nut (21) of the left hand external stroke adjustment screw.

PRESSURE TEST

- Pressure test the actuator with 6 bar (90 psig) compressed air and inspect for leaks using a soap and water solution sprayed on to all joints and rotating shafts.

STORAGE

To store the pneumatic actuators the following precautions are recommended:
- Ensure the actuator is completely dry and water free.
- Maintain the entrances of air passages by fitting the original or replacement plastic corks.
- Protect from dust, dirt and damage by packing in box or plastic bag.

ALL PNEUMATIC ACTUATORS HAVE BEEN 100% FACTORY TESTED IN OPERATION AND WATERTIGHTNESS AND THEY HAVE BEEN FITTED WITH INDIVIDUAL QUALITY CONTROL STAMPS.

IMPORTANT SAFETY WARNINGS

A. Before carrying out any repair or maintenance on the actuator, make sure that the pressure supply lines and electrical connections have been safely isolated, removed or disconnected by authorized personnel.
The actuator must not be pressurized at any time during installation as injury may result.
B. Never put any part of your body in the opening or port of the controlled valve or device.
C. Special attention and precautions should be observed of the stored energy contained in the spring return pneumatic actuators. Do not disassemble individual spring cartridges. Disassembly may result in personal injury.
D. Before installing onto a valve make sure that the rotation of the valve and the actuator are the same and that the position indicator orientation is also correct.
E. Never forget that for the correct operation, a pneumatic actuator must be sized adequately and with sufficient safety margin of torque output for the correct operating conditions of the valve.
* Authorized and skilled personnel should only perform maintenance of these actuators.