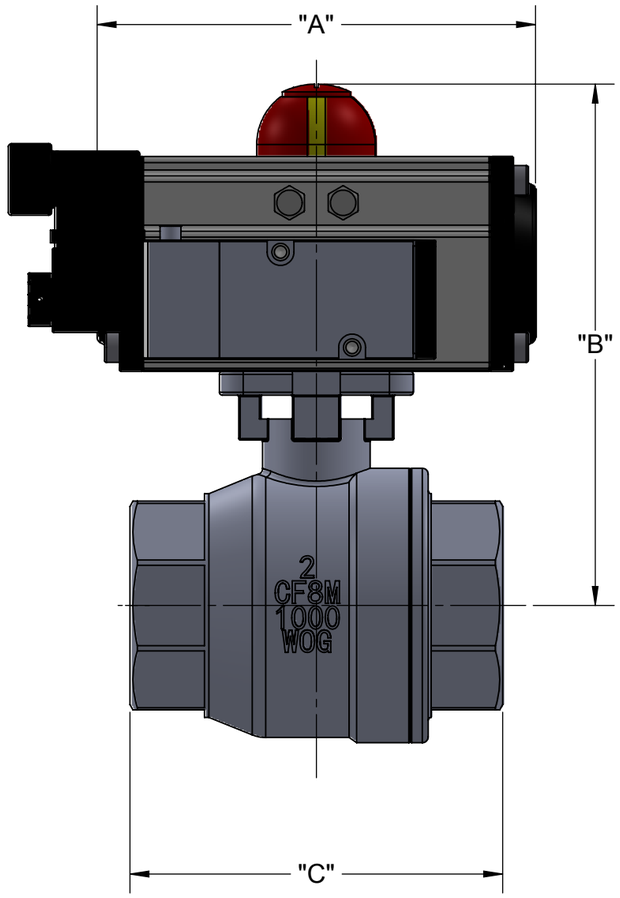

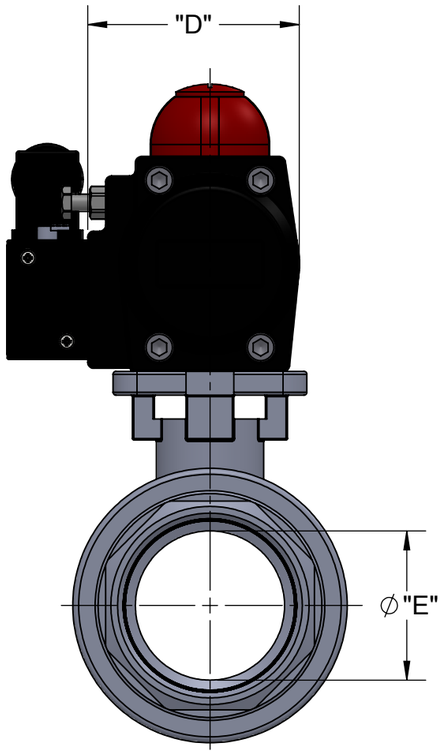

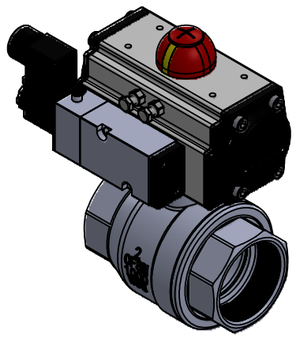

BA260LDB Spring Return (Fail Closed) Pneumatic Ball Valve 1/4" - 3" NPT

- CF8M (316 SS) two-piece full port
- 316 SS ball and stem
- TFM 1600 PTFE seats and packing
- 1000 psi rated @ 100° F
- Temp range: -20° to 450° F 50 psi SWP
- Spring Return (fail closed) actuator sized for 80 psi air supply
- 120V three-way NEMA 4/4x NAMUR mounted solenoid
- For on/off service

Spring Return Actuator Assembly Dimensions						
Valve	Model	Dimensions in inches				
Size	Actuator	A ''	B ''	C ''	D ''	E ''
1/4	MC2S4C	5.79	5.27	2.64	2.81	0.42
3/8	MC2S4C	5.79	5.27	2.64	2.81	0.50
1/2	MC2S4C	5.79	5.27	2.64	2.81	0.59
3/4	MC3S4C	6.61	7.03	2.76	3.27	0.79
1	MC5S4C	7.24	7.77	3.35	3.74	0.98
1 1/4	MC5S4C	7.24	7.77	3.70	3.74	1.26
1 1/2	MC7S4C	8.03	9.07	4.13	4.05	1.50
2	MC10S4C	10.31	9.07	4.92	4.27	1.97
2 1/2	MC29S4C	11.65	10.89	6.10	5.59	2.50
3	MC29S4C	11.65	11.18	6.81	5.59	2.99

UNITS
in [mm]
PRIMARY / SECONDARY

THIRD ANGLE PROJECTION

THIS PRINT IS THE PROPERTY OF MILWAUKEE VALVE COMPANY, INC. AND REPRESENTS A PROPIETARY ARTICLE IN WHICH MILWAUKEE VALVE COMPANY, INC. RETAINS ANY AND ALL PATENTS AND OTHER RIGHTS, INCLUDING EXCLUSIVE RIGHTS OF USE AND/OR MANUFACTURE AND/OR SALE. POSSESSION OF THIS PRINT DOES NOT CONVEY ANY PERMISSION TO REPRODUCE PRINT OR MANUFACTURE THE ARTICLE OR ARTICLES SHOWN THEREIN; SUCH PERMISSION TO BE GRANTED ONLY BY SPECIFIC AUTHORIZATION IN WRITING, SIGNED BY AN OFFICER OR OTHER AUTHORIZED AGENT OF MILWAUKEE VALVE COMPANY INC.

DEPARTMENT	ENGINEERING	INTL ECN
DWN	10/18/2016	KJS
CHKD		
APVD		
MDLD		

MILWAUKEE VALVE CO., INC.
NEW BERLIN, WI 53151-7301

TITLE
2 FULL PORT PNEUMATIC
STAINLESS BALL VALVE

REF NO	PC NO	SIZE	CAGE CODE	DRAWING NO	REV
	-	B	76364	2" 1000 WOG	1

REG APVL | SCALE: 1:4 | MASS UNITS: | SHEET 1 OF 1