RELIEF VALVE P-612A

ALUMINUM

Bulk Tank Trucks ● Pneumatic Conveyor Systems
Railroad Dry Bulk Tanks
NPT Threaded Inlet



(PATENTED)

NEW IMPROVED DESIGN

The new seat design offers increased capacity and improved blowdown (reseating).

TAMPERPROOF.
Tank trailer drives cannot alter the pressure setting in the field to speed up delivery. A wire seal assures the pressure setting. Aluminum body plus stainless steel seating provide both lightweight construction and corrosion resistance. Inlet is 2" FNPT.

Temperature Range (-20°F to 400°F). This valve has a VITON diaphragm and stainless steel disc.

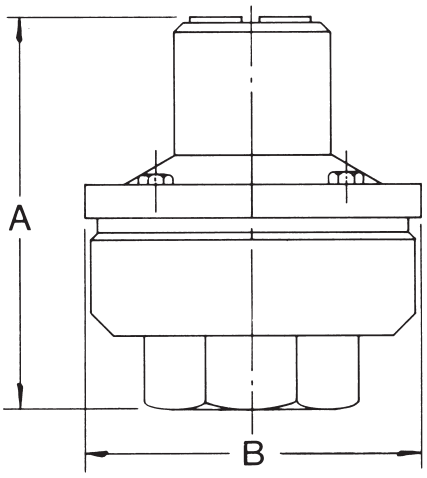

DIMENSIONS-INCHES

SIZE	A	B
2	5 1/2	4 5/8

The information presented on this sheet is correct at the time of publication. Milwaukee Valve reserves the right to change design, and/or material specifications without notice. For the most current information access www.milwaukeevalve.com