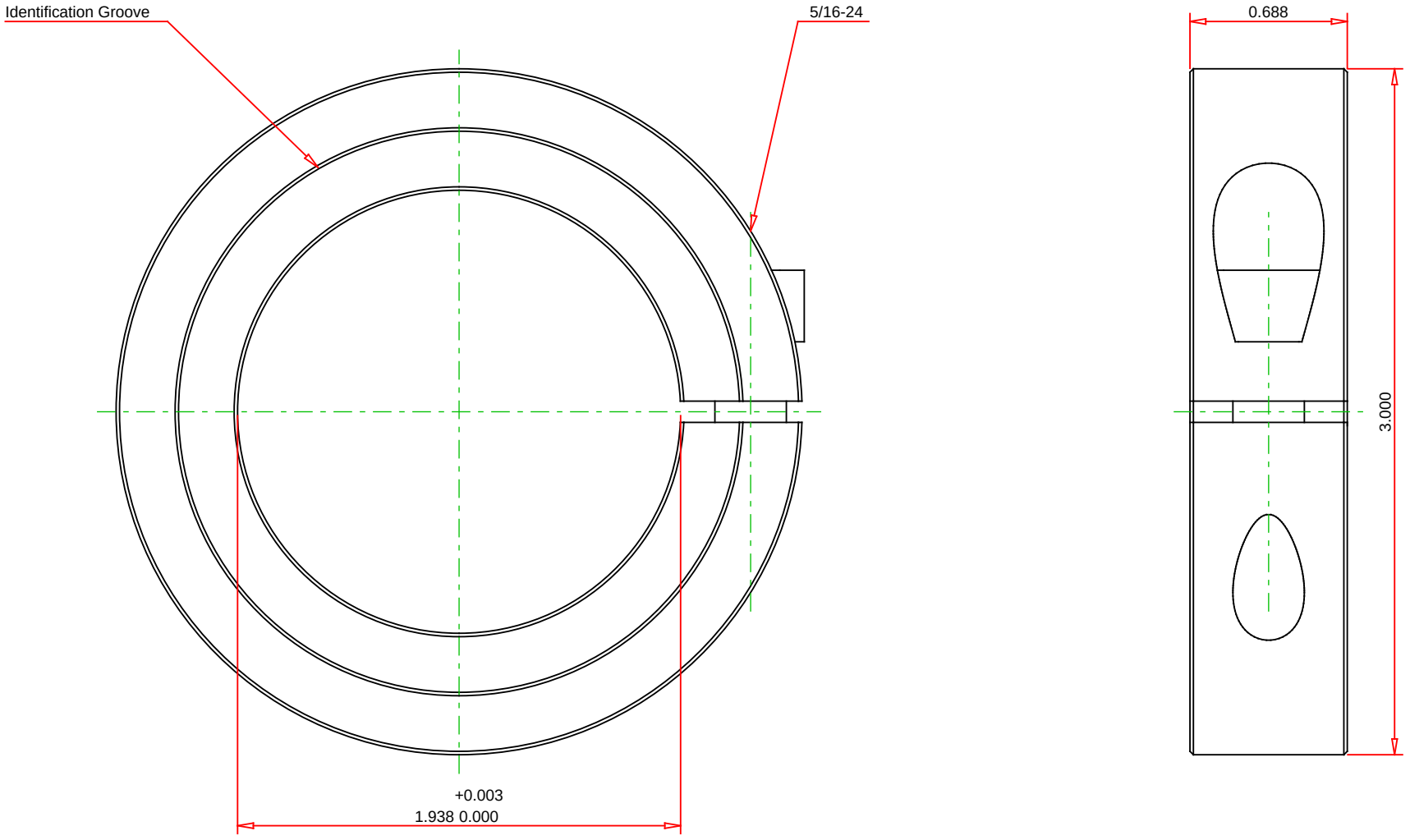

Screw : Hex Socket Cap Screw, 3A Thread, Stainless Steel, ASTM F837: 5/16-24 x 1

Note :	Part No. :	Material :	Finish :
- Drawing not to Scale	1C-193-S	Stainless Steel, ASTM A582	Plain
	Description : One-Piece Clamping Collar 1C-Series		

CLIMAX METAL PRODUCTS COMPANY

CLIMAXMETAL
Address : 8141 Tyler Boulevard
Mentor, OH 44060
Phone : 800.542.6552 Fax: 800.860.5553
Email : sales@climaxmetal.com
Web : www.climaxmetal.com