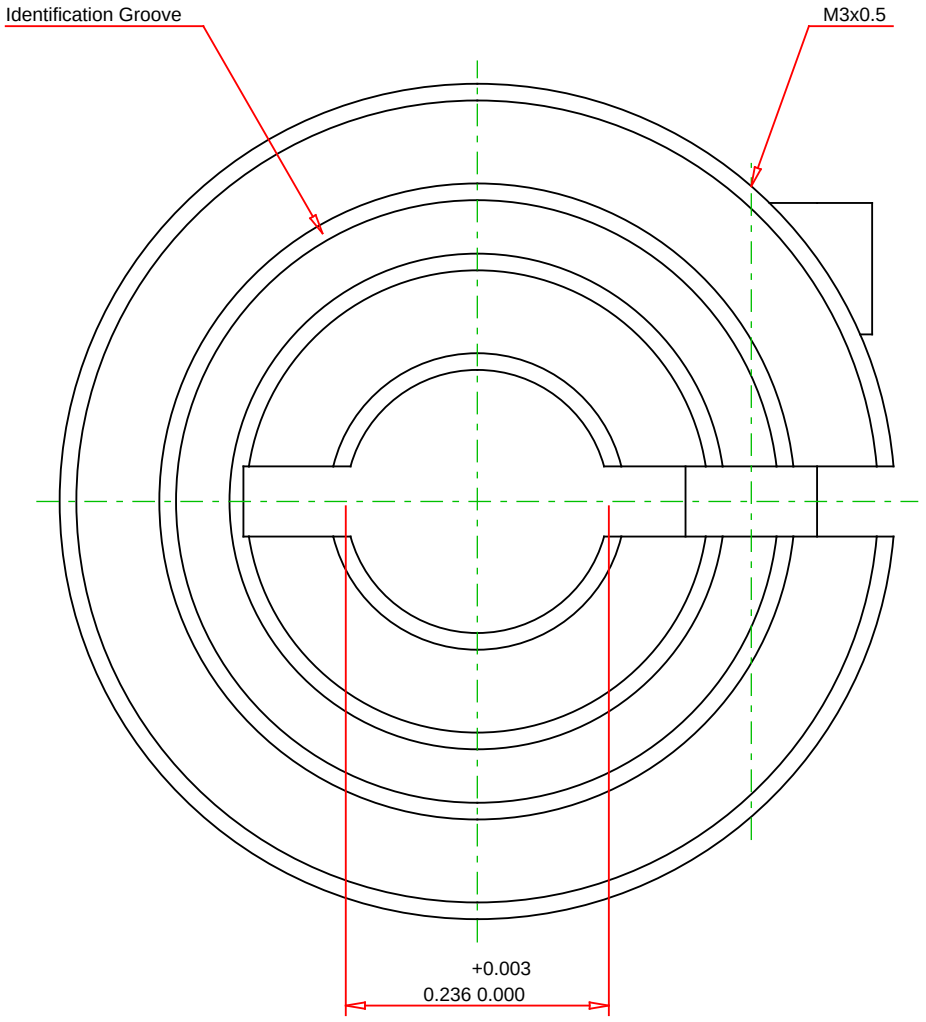

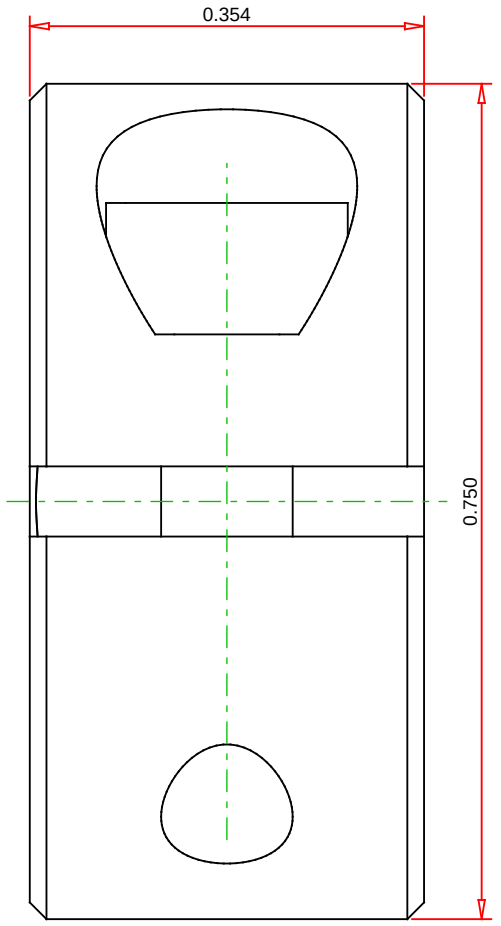

Screw : Hex Socket Cap Screw, Steel: M3 x 8

Note :	Part No. :	Material :	Finish :
- Drawing not to Scale	M1C-06	Steel, ASTM A108	Black Oxide

Description :
Metric One-Piece Clamping Collar M1C-Series

CLIMAX
METAL PRODUCTS COMPANY

CLIMAXMETAL
Address : 8141 Tyler Boulevard
Mentor, OH 44060
Phone : 800.542.6552 Fax: 800.860.5553
Email : sales@climaxmetal.com
Web : www.climaxmetal.com