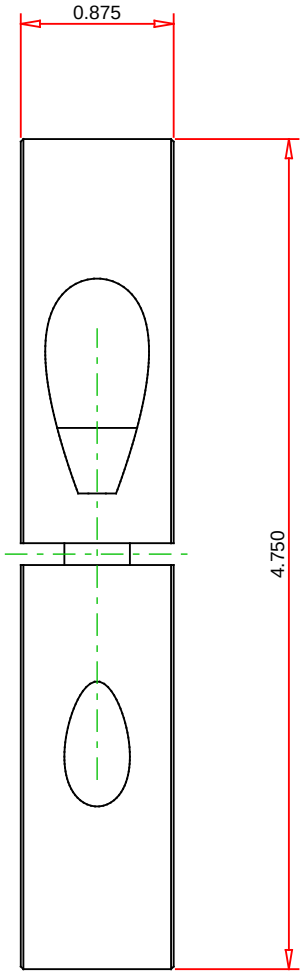

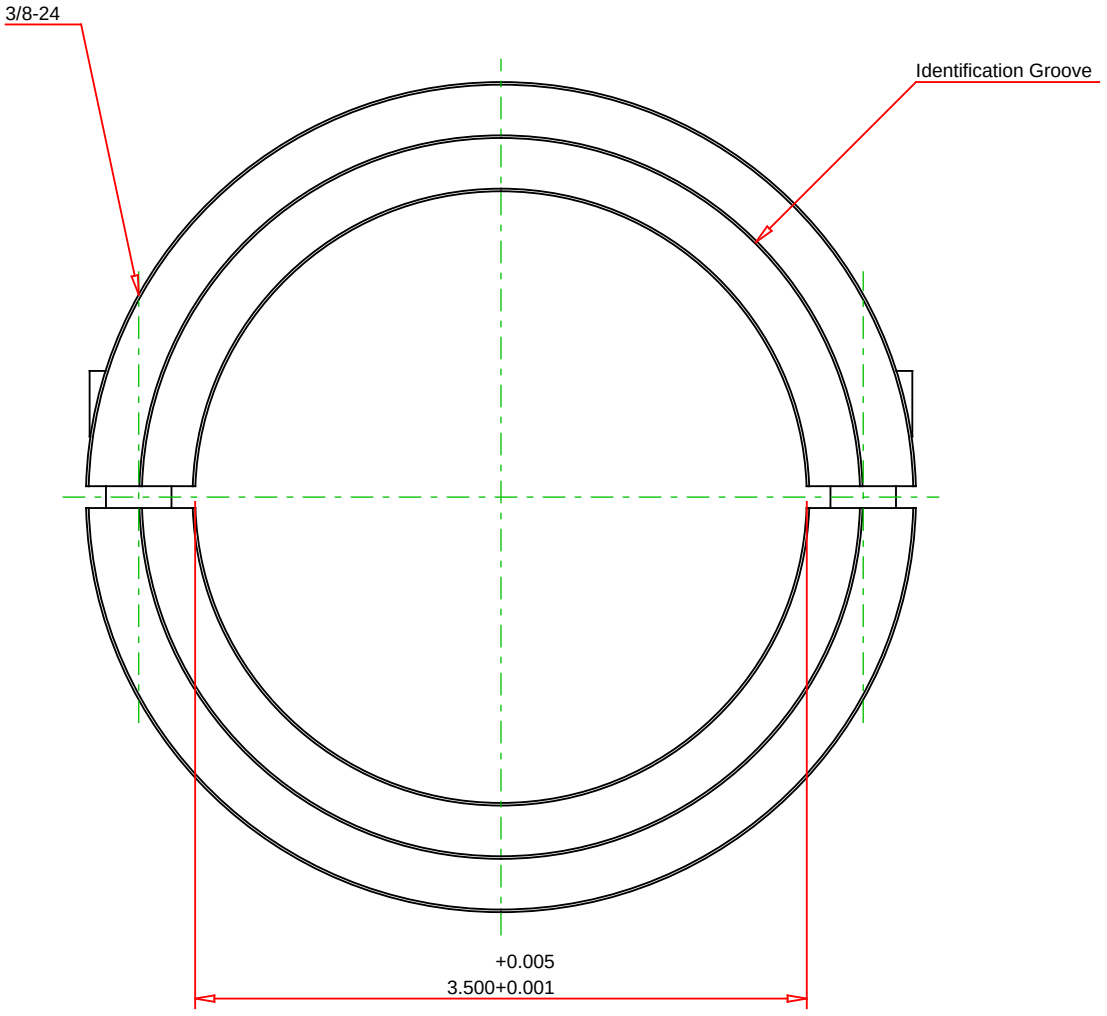

Screw : Hex Socket Cap Screw, 3A Thread, Steel, ASTM A574: 3/8-24 x 1

Note :	Part No. :	Material :	Finish :	
- Drawing not to Scale	G2SC-350-B	Steel, ASTM A108	Black Oxide	
	Description : Two-Piece, Clamping Collar- G2SC-Series			

CLIMAXMETAL
Address : 8141 Tyler Boulevard
Mentor, OH 44060
Phone : 800.542.6552 Fax: 800.860.5553
Email : sales@climaxmetal.com
Web : www.climaxmetal.com