350 PSI WWP UL/FM Butterfly Valves

Designed for normally open position monitoring

NSF/ANSI/CAN 61
NSF/ANSI/CAN 372

Fire Protection Valve • Grooved Mechanical Style • Nylon Coated Ductile Iron Body • Extended Neck • Elastomer Encapsulated Disc • Internal Supervisory Switches • Compatible with IPS Pipe†

350 PSI/24 Bar Non-Shock Cold Water 2½" - 10"

UL/ULC LISTED** • UL/FM LISTED FOR INDOOR AND OUTDOOR SERVICE • THIRD PARTY CERTIFIED TO NSF/ANSI/CAN 61 AND 372 • CALIFORNIA STATE FIRE MARSHALL LISTING NO. 7770-1243:0500

MATERIAL LIST

	PART	SPECIFICATION
1	Indicator Flag	Painted Steel
2	Stem Adapter	Steel
3	Gear Operator	Cast Iron and Steel
4	Retaining Ring	Carbon Steel
5	Cartridge Seal	Brass ASTM C36000
6	Stem Seals	EPDM
7	Upper Stem	Stainless Steel ASTM A582 Type 416
8	Upper Bushing	Steel with PTFE Lining
9	Body	Ductile Iron ASTM A395 with Polyaminde Coating
10	Disc	Ductile Iron ASTM A536 with EPDM Encapsulation
11	Lower Bushing	Steel with PTFE Lining
12	Lower Stem	Stainless Steel ASTM A582 Type 416
13	Handwheel	Cast Iron

Factory mounted with two internal supervisory switches.
Uses NIBCO model T1446762 PP switch.
Ground post (-GP) and wall post (-WP) available. Normally open monitored only.
Section VI of the Rubber-Seated Butterfly Valve O&M Manual.

⚠ **WARNING:** This product can expose you to chemicals including lead, which is known to the State of California to cause cancer and birth defects or other reproductive harm. For more information go to www.P65Warnings.ca.gov.



GD-6865-4N
(not shown)
No Switches

GD-6865-8N
Grooved
2½", 3", 4", 6", 8", 10"

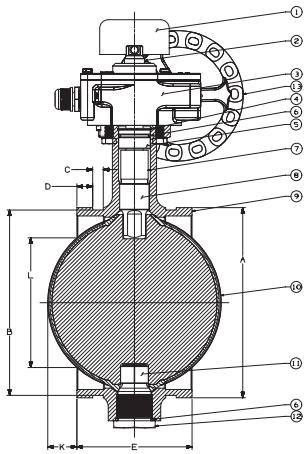

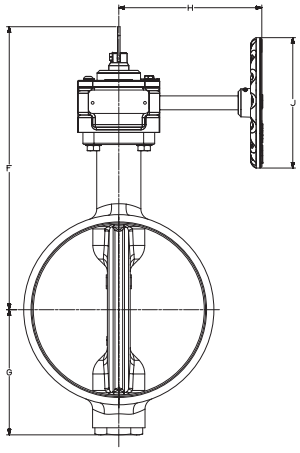

DIMENSIONS—WEIGHTS

SIZE		Dimensions A		B		C		D		E		F		G		H		J		K		L		Weight	
In.	mm.	In.	mm.	In.	mm.	In.	mm.	In.	mm.	In.	mm.	In.	mm.	In.	mm.	In.	mm.	In.	mm.	In.	mm.	In.	mm.	Lbs.	Kg.
2½"	65	2.88	73	2.72	69	0.31	8	0.63	16	3.81	97	8.95	227	2.20	56	4.92	125	4.25	108	—	—	—	—	9.5	4.3
3 OD	76.1	3.00	76.1	2.85	72	0.31	8	0.63	16	3.81	97	9.16	233	2.47	63	4.92	125	4.25	108	—	—	—	—	11.3	5.2
3	80	3.50	80.0	3.34	85	0.31	8	0.63	16	3.81	97	9.16	233	2.47	63	4.92	125	4.25	108	—	—	—	—	11.6	5.3
4	100	4.50	114.3	4.33	110	0.38	10	0.63	16	4.56	116	10.00	254	3.00	76	4.92	125	4.25	108	—	—	—	—	15.0	6.8
6 OD	165.1	6.50	165.1	6.33	161	0.38	10	0.63	16	5.81	148	11.92	303	4.33	110	6.48	165	6	152	—	—	—	—	31.5	14.3
6	150	6.63	168.3	6.45	164	0.38	10	0.63	16	5.81	148	11.92	303	4.33	110	6.48	165	6	152	—	—	—	—	31.3	14.2
8	200	8.63	219	8.44	214	0.44	11	0.75	19	5.25	133	12.85	326	5.67	114	6.48	165	6	152	1.32	34	5.87	149	43.0	19.5
10	250	10.77	250	10.55	268	0.50	13	0.75	19	6.25	159	15	381	6.77	172	8.74	222	6	152	1.74	44	7.44	189	77.0	35

**** Compliance with the Standard for Butterfly Valves for Fire Protection Service, UL 1091, and Indicating Values, FM Class Number 1112.**
† See Grooved Pipe Specification section

Visit our website for the most current information.