NIBCO INC.
WORLD HEADQUARTERS
1516 MIDDLEBURY ST.
ELKHART, IN 46516-4740
USA
PHONE: 574.295.3000
FAX: 574.295.3307
WEB: www.nibco.com

AHEAD OF THE FLOW®

INSTALLATION, OPERATION & MAINTENANCE INSTRUCTIONS

Review Date: 08/13/2020
Original Date: 06/01/2006

Installation and Operation Instructions for NIBCO® Circuit Balancing Valves (Figures F737A & G737A)

VALVE INSTALLATION INSTRUCTIONS

1. Unpack the valve and inspect to ensure no damage has occurred during shipment. Rotate valve handwheel in counterclockwise direction, opening valve to full open position.
2. Remove protective covers from both ends of valve. Inspect valve bore to assure it is clean and free from foreign materials. Rotate handwheel in clockwise direction until valve is fully closed. The Indicator Counter display window just below the handwheel should show 00.
3. Determine where the valve is to be located into the piping system. This valve is a combined regulating and flow measurement device and must be installed with uninterrupted straight pipe length of equal nominal size as that of the valve, both upstream and downstream, to ensure laminar flow for precise flow control measurements.

The following are the ***minimum*** straight pipe lengths required upstream and downstream piping:

- In installations not directly adjacent to a pump:
  - Five (5) diameters of straight pipe length upstream of the valve
  - Three (3) diameters of straight pipe length downstream of the valve
- In installations adjacent to a pump:
  - Ten (10) diameters of straight pipe length upstream of the valve
  - Three (3) diameters of straight pipe length downstream of the valve
- See the ***Installation Guidelines*** diagram, below

4. Inspect piping system to assure it is clean and free of all foreign materials.
5. Locate flow direction arrow on valve body to determine valve orientation direction in piping system. The arrow must align with the direction of fluid flow. NIBCO balancing valves may be installed in either horizontal or vertical lines.
6. Install the valve into the piping system. A lifting lug bolted to the bonnet of the valve is provided to assist in hoisting the valve into piping location. DO NOT LIFT BY HANDWHEEL, as damage may occur. Connect valve to piping using proper gaskets for your installation.

TEST POINT INSTALLATION INSTRUCTIONS

1. Two test points are supplied with each valve. They are enclosed in a plastic bag along with these instructions, and secured to the valve lifting lug.
2. Determine which side of the valve body offers the best location to install the test points. Enough clearance is needed to allow the balancing technician to make manometer connections to the test points for proper valve adjustment.

CAUTION: Only qualified personnel should undertake the procedures outlined in this document. NIBCO INC., its agents, representatives and employees assumes no liability for the use of these procedures. These procedures are offered as suggestions only.

3. **Verify that the piping system/valve is NOT PRESSURIZED.** Remove two 1/4” NPT pipe plugs from valve body. One must be from the upstream side, and one from the downstream side of the valve.
4. Apply PTFE tape, or other thread sealant compound, to threads of test points. Install test points into valve body and tighten at hexagonal portion of test point body. **DO NOT OVERTIGHTEN**, as damage to test points or body threads may occur. Finger-tighten the knurled cap on test points.
5. Piping system is now ready for pressure testing.

OPERATION INSTRUCTIONS

All balancing valves should be in the fully open position prior to water distribution system commissioning or flushing. Regulation is accomplished by rotating the handwheel clockwise. The disc position corresponds with the Indicator Counter display window. At the closed position, Indicator Counter should show 00. If not, refer to setting instructions below.

VALVE SETTING INSTRUCTIONS

1. Determine desired flow rate for each valve and adjust valve handwheel until desired rate is achieved. Refer to NIBCO Flow Data instruction sheets for relationship between Flow Rate, Signal/Head Loss, and Handwheel Position.
2. Remove cap form center of handwheel.
3. Turn regulating screw counterclockwise until it stops using a small flat blade screwdriver. This sets the memory stop so the valve can be closed and then returned to this predetermined set position.
4. Replace cap into center of handwheel.

CLOSED POSITION 00 SETTING INSTRUCTIONS

1. Rotate handwheel clockwise until valve is in the closed position.
2. Remove cap from center of handwheel, remove center screw and washer, and lift handwheel upward removing it from valve stem.
3. Remove white plastic counter ring from inside of blue plastic neck ring by lifting upward.
4. Grasp blue plastic neck ring and lift upward to remove it from valve.
5. Lift and rotate the white plastic spring loaded counter wheel until red color 0 is facing out opposite stem.
6. Replace blue neck ring onto counter assembly plate, aligning view window with counter wheel, checking to see that red zero is showing in the view window.
7. Replace white counter ring inside neck ring, rotate until blue 0 is displayed in view window.
8. Reassemble handwheel assembly onto valve stem and secure with screw and washer.
9. Replace handwheel cap.

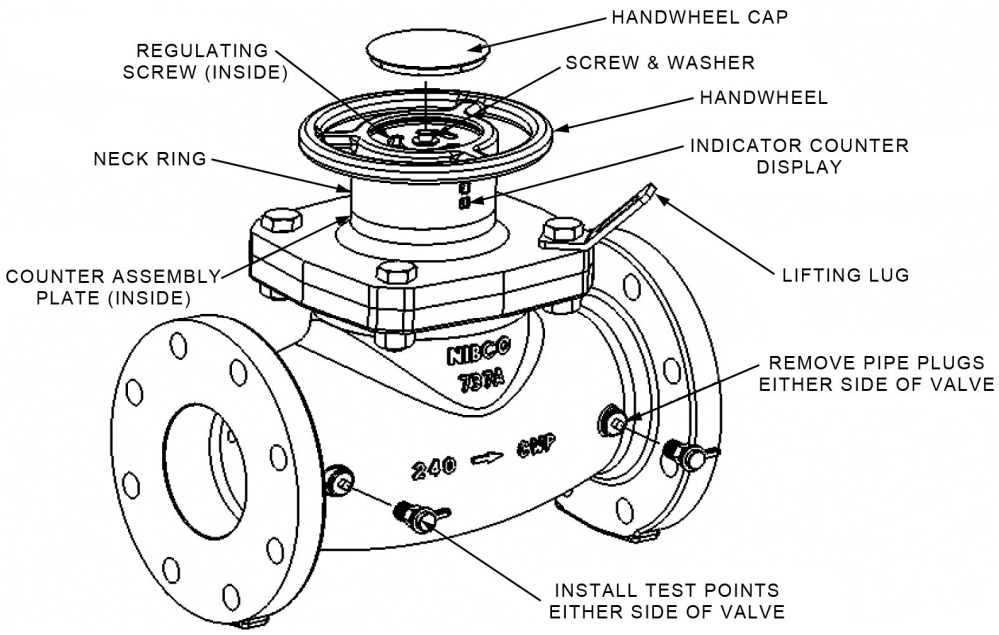

INSTALLATION GUIDELINES

