SIEMENS

Data sheet US2:22CP32WG91

Reversing motor starter Size 0 Three phase full voltage Amb compensate bimetal OLrelay Contactor amp rating 18Amp Non-combination type Encl NEMA type 4X 304 S-steel Water/dust tight non-corrosive



Figure similar

Product brand name	Class 14 & 22
Design of the product	Reversing motor starter

General technical data

Weight [lb]	16.8 lb
Height x Width x Depth [in]	13 × 13 × 5 in
Protection against electrical shock	NA for enclosed products
Installation altitude [ft] at height above sea level maximum	6560 ft
Ambient temperature [°F]	
• during storage maximum	149 °F
• during operation maximum	104 °F
Ambient temperature	
• during storage maximum	65 °C
• during operation maximum	40 °C
Country of origin	USA

Horsepower ratings

Subject to change without notice
© Copyright Siemens

Yielded mechanical performance [hp] for three-phase AC motor	
• at 200/208 V rated value	3 hp
• at 220/230 V rated value	3 hp
• at 460/480 V rated value	5 hp
• at 575/600 V rated value	5 hp

Contactor	
Size of contactor	NEMA controller size 0
Number of NO contacts for main contacts	3
Operating voltage for main current circuit at AC at 60 Hz maximum	600 V
Operating current at AC at 600 V rated value	18 A
Mechanical service life (switching cycles) of the main contacts typical	10000000

Auxiliary contact	
Number of NC contacts at contactor for auxiliary contacts	0
Number of NO contacts at contactor for auxiliary contacts	1
Number of total auxiliary contacts maximum	8
Contact rating of auxiliary contacts of contactor according to UL	10A@600VAC (A600), 5A@600VDC (P600)

Coil	
Type of voltage of the control supply voltage	AC
Control supply voltage	
• at AC at 50 Hz rated value	190 ... 220 V
• at AC at 60 Hz rated value	220 ... 240 V
Holding power at AC minimum	8.6 W
Apparent pick-up power of magnet coil at AC	218 V·A
Apparent holding power of magnet coil at AC	25 V·A
Operating range factor control supply voltage rated value of magnet coil	0.85 ... 1.1
Percental drop-out voltage of magnet coil related to the input voltage	50 %
Switch-on delay time	19 ... 29 ms
Off-delay time	10 ... 24 ms

Overload relay	
Product function	
• Overload protection	Yes
• Test function	Yes
• External reset	Yes
Reset function	Manual and automatic

Subject to change without notice
© Copyright Siemens

Adjustment range of thermal overload trip unit	0.85 ... 1.15
Number of NC contacts of auxiliary contacts of overload relay	1
Number of NO contacts of auxiliary contacts of overload relay	1
Operating current of auxiliary contacts of overload relay	
• at AC at 600 V	10 A
• at DC at 250 V	5 A
Contact rating of auxiliary contacts of overload relay according to UL	10A@600VAC (A600), 5A@250VDC (P300)

Enclosure	
Degree of protection NEMA rating of the enclosure	NEMA 4X 304 stainless steel enclosure
Design of the housing	Dust-tight, watertight & corrosion resistant

Mounting/wiring	
Mounting position	Vertical
Mounting type	Surface mounting and installation
Type of electrical connection for supply voltage line-side	Screw-type terminals
Tightening torque [lbf·in] for supply	20 ... 20 lbf·in
Temperature of the conductor for supply maximum permissible	75 °C
Material of the conductor for supply	AL or CU
Type of electrical connection for load-side outgoing feeder	Screw-type terminals
Tightening torque [lbf·in] for load-side outgoing feeder	35 ... 50 lbf·in
Type of electrical connection of magnet coil	Screw-type terminals
Tightening torque [lbf·in] at magnet coil	5 ... 12 lbf·in
Type of connectable conductor cross-sections of magnet coil at AWG conductors single or multi-stranded	2x (16 ... 12 AWG)
Temperature of the conductor at magnet coil maximum permissible	75 °C
Material of the conductor at magnet coil	CU
Type of electrical connection for auxiliary contacts	Screw-type terminals
Tightening torque [lbf·in] at contactor for auxiliary contacts	10 ... 15 lbf·in
Type of connectable conductor cross-sections at contactor at AWG conductors for auxiliary contacts single or multi-stranded	1x (12 AWG), 2x (16 ... 14 AWG), 2x (18 ... 16 AWG)
Temperature of the conductor at contactor for auxiliary contacts maximum permissible	75 °C
Material of the conductor at contactor for auxiliary contacts	CU

Subject to change without notice
© Copyright Siemens

Type of electrical connection at overload relay for auxiliary contacts	Screw-type terminals
Tightening torque [lbf·in] at overload relay for auxiliary contacts	5 ... 12 lbf·in
Type of connectable conductor cross-sections at overload relay at AWG conductors for auxiliary contacts single or multi-stranded	2x (16 ... 12 AWG)
Temperature of the conductor at overload relay for auxiliary contacts maximum permissible	75 °C
Material of the conductor at overload relay for auxiliary contacts	CU

Short-circuit current rating

Design of the fuse link for short-circuit protection of the main circuit required	10kA@600V (Class H or K); 100kA@600V (Class R or J)
Design of the short-circuit trip	Thermal magnetic circuit breaker
Maximum short-circuit current breaking capacity (Icu)	
• at 240 V	14 kA
• at 480 V	10 kA
• at 600 V	10 kA
Certificate of suitability	NEMA ICS 2; UL 508; CSA 22.2, No.14

Further information

Industrial Controls - Product Overview (Catalogs, Brochures,…)
www.usa.siemens.com/iccatalog

Industry Mall (Online ordering system)
https://mall.industry.siemens.com/mall/en/us/Catalog/product?mlfb=US2:22CP32WG91

Service&Support (Manuals, Certificates, Characteristics, FAQs,...)
https://support.industry.siemens.com/cs/US/en/ps/US2:22CP32WG91

Image database (product images, 2D dimension drawings, 3D models, device circuit diagrams, EPLAN macros, ...)
http://www.automation.siemens.com/bilddb/cax_de.aspx?mlfb=US2:22CP32WG91&lang=en

Certificates/approvals
https://support.industry.siemens.com/cs/US/en/ps/US2:22CP32WG91/certificate

© Copyright Siemens

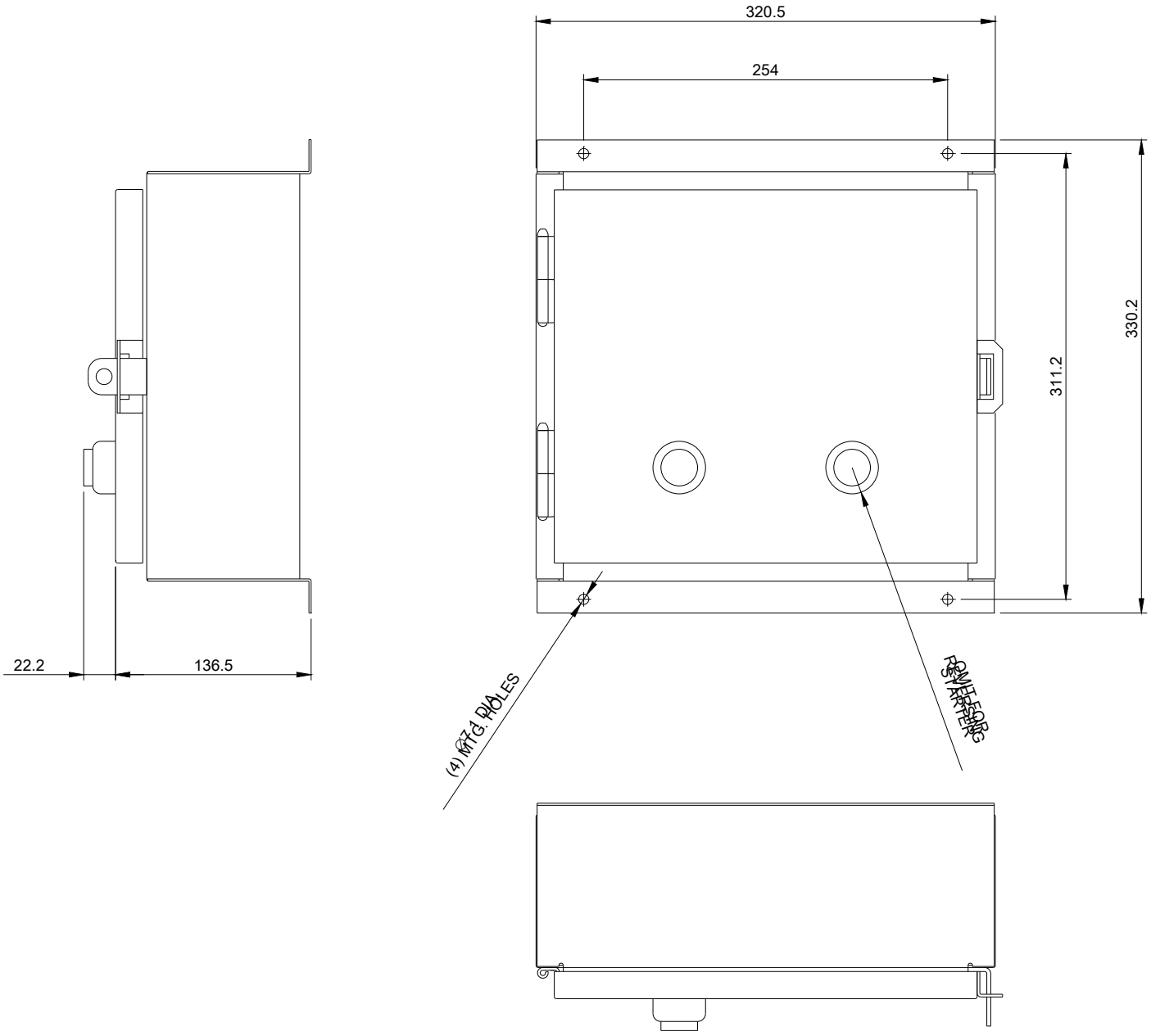

Subject to change without notice
© Copyright Siemens

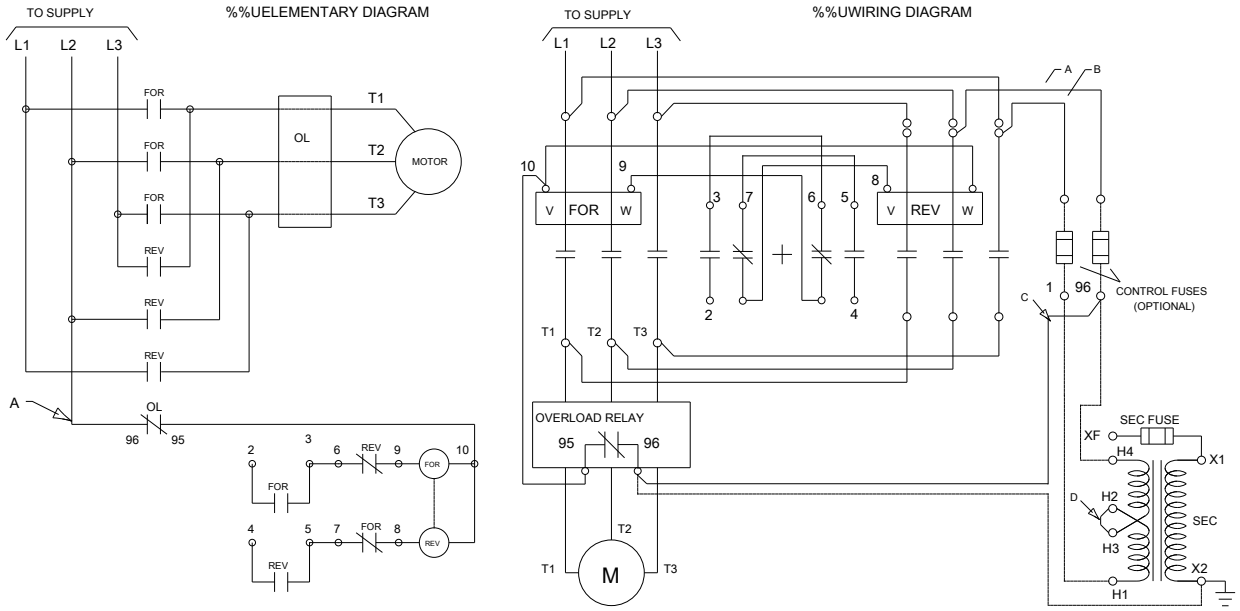

D46590003

last modified: 11/15/2019

Subject to change without notice
© Copyright Siemens