CODE NUMBER

33621015

DESCRIPTION

Battery Power Supply, Below Deck Manual Mixing Valve, Polished Chrome Finish, 0.5 gpm, Multi-Laminar Spray, Infrared Sensor, Sloan® Battery-Powered Wall-Mounted Wall Body.

DETAILS

- Flow Rate: 0.5 gpm (1.9 Lpm) (0.5GPM)
- Spray Type: Multi-Laminar (MLM)
- Spout Type: Pedestal ()
- Sensor Type: Infrared (IR)
- Mounting Type: Single Hole ()
- Power Supply: Battery (BAT)
- Temperature Mixer: Below Deck Manual Mixing Valve (BDM)
- Finish: Polished Chrome (CP)
- Factory Default Timeout: 30s
- Factory Default GPC: 0.25

FEATURES

Commercial Grade, ADA Compliant, Electronic, Sensor-Activated, Brass Gooseneck Hand Washing Faucet with the following features:

- Adjustable Infrared Sensor Range
- 36” (914 mm) Long Sensor Cable
- 24” (610 mm) Long Flex Hose
- Filtered Solenoid Valve with serviceable Strainer Filter
- Includes Four (4) AA-size Batteries
- Includes appropriate Mounting Hardware

ELECTRICAL SPECIFICATIONS

- Battery Life: 2 years 8,000 cycles/month
- Timeout Adjustment Settings: 30s

DOWNLOADS

- SF Series Installation Instructions
- SF Series (FR) Installation Instructions
- SF Series (SP) Installation Instructions
- SFP 35-A Installation Instructions
- SF 2800/2850 Repair and Maintenance Guide
- Additional Downloads



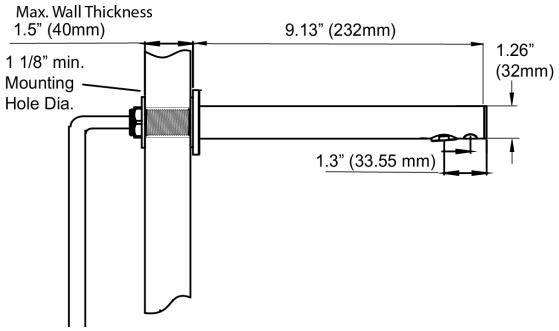

COMPLIANCES & CERTIFICATIONS

(ADA Compliant, ASME A112.18.1 Compliant, CalGreen Compliant, CEC Compliant, cUPC Certified, UPC Certified, UPC Low Lead Compliant, cUPC Low Lead Compliant, EPD, GPC 0.25 or less, HPD, NYC604.4, Proposition 65, TAS, WELL Building Standard)

RECOMMENDED SPECIFICATION

Faucet shall include cast brass body, Alkaline batteries, Below deck manual mixing valve and 0.5gpm multilaminar spray head.

NOTES

All information contained within this document subject to change without notice.

Looking for other variations of the SF-2850 product? View the general spec sheet with all options.

Find a matching soap dispenser for this faucet.
Find a compatible sink for this faucet.

Sloan 10500 Seymour Ave, Franklin Park, IL 60131
Phone: 800.982.5839 • Fax: 800.447.8329 • sloan.com

WARRANTY

View Warranty Information

ROUGH-IN

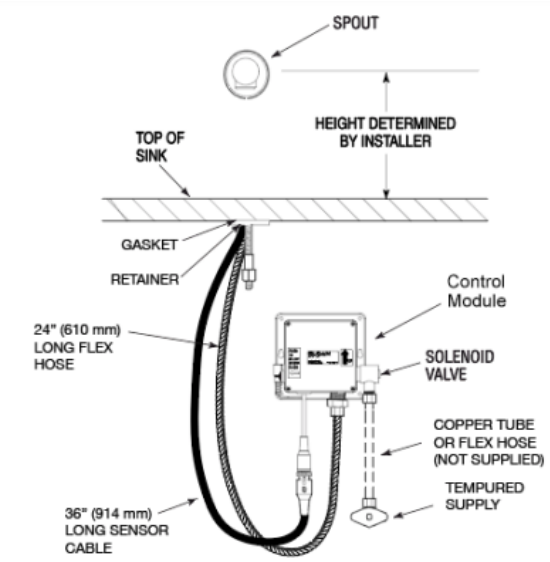

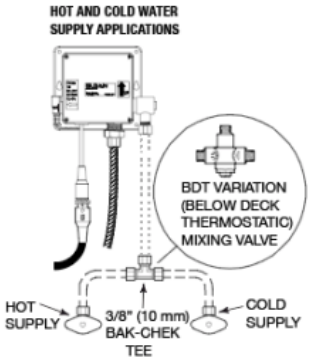

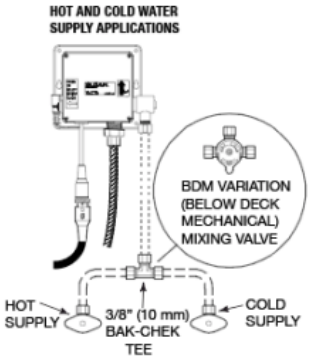

Sloan 10500 Seymour Ave, Franklin Park, IL 60131
Phone: 800.982.5839 • Fax: 800.447.8329 • sloan.com

Code 33621015 • Downloaded 06/23/23 • 02/04/23 • View Latest Version