SF-2800-PLG-BDM-CP-0.35GPM-MLM-IR-FCT

CODE NUMBER

33621017

DESCRIPTION

Plug Adapter Power Supply, Below Deck Manual Mixing Valve, Polished Chrome Finish, 0.35 gpm, Multi-Laminar Spray, Infrared Sensor, Sloan® Hardwired-Powered Wall-Mounted Wall Body.

DETAILS

- Flow Rate: 0.35 gpm (1.3 Lpm) (0.35GPM)
- Spray Type: Multi-Laminar (MLM)
- Spout Type: Pedestal ()
- Sensor Type: Infrared (IR)
- Mounting Type: Single Hole ()
- Power Supply: Plug Adapter (PLG)
- Temperature Mixer: Below Deck Manual Mixing Valve (BDM)
- Finish: Polished Chrome (CP)
- Factory Default Timeout: 30s
- Factory Default GPC: 0.175

FEATURES

Commercial Grade, ADA Compliant, Electronic, Sensor-Activated, Brass Gooseneck Hand Washing Faucet with the following features:

- Adjustable Infrared Sensor Range
- 36” (914 mm) Long Sensor Cable
- 24” (610 mm) Long Flex Hose
- Filtered Solenoid Valve with serviceable Strainer Filter
- Includes Four (4) AA-size Batteries
- Includes appropriate Mounting Hardware

ELECTRICAL SPECIFICATIONS

- Battery Life: 2 years 8,000 cycles/month
- Timeout Adjustment Settings: 30s

DOWNLOADS

- SF Series Installation Instructions
- SF Series (FR) Installation Instructions
- SF Series (SP) Installation Instructions
- SFP 35-A Installation Instructions
- SF 2800/2850 Repair and Maintenance Guide
- Additional Downloads



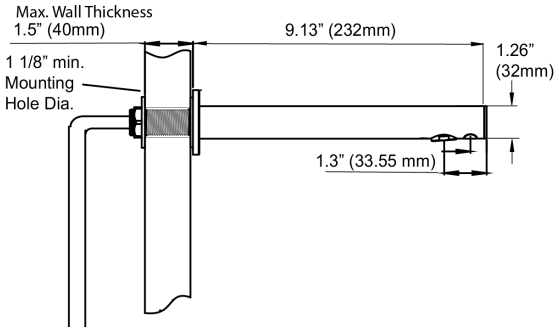

COMPLIANCES & CERTIFICATIONS

(ADA Compliant, ASME A112.18.1 Compliant, BREEAM Water Credit, CalGreen Compliant, CEC Compliant, cUPC Certified, UPC Certified, UPC Low Lead Compliant, cUPC Low Lead Compliant, EPD, GPC 0.25 or less, Green Globes Water Credit, HPD, NYC604.4, Proposition 65, Satisfies LEED Credits, TAS, WELL Building Standard)

RECOMMENDED SPECIFICATION

Faucet shall include cast brass body, plug adapter, Alkaline batteries for backup power, Below deck manual mixing valve and 0.35gpm multilaminar spray head.

NOTES

All information contained within this document subject to change without notice.

Looking for other variations of the SF-2800 product? View the general spec sheet with all options.

Sloan 10500 Seymour Ave, Franklin Park, IL 60131
Phone: 800.982.5839 • Fax: 800.447.8329 • sloan.com

Find a matching soap dispenser for this faucet.
Find a compatible sink for this faucet.

WARRANTY

View Warranty Information

ROUGH-IN

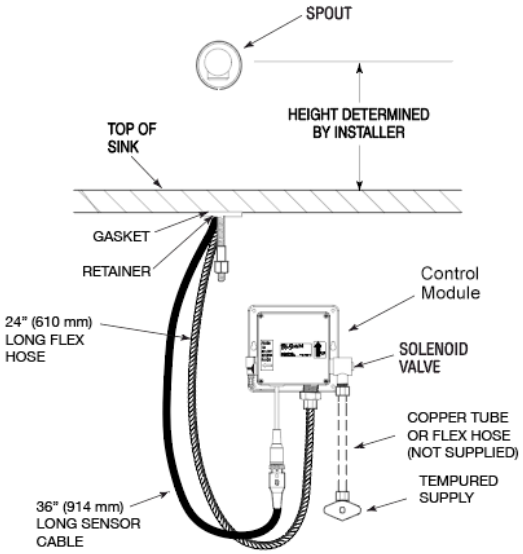

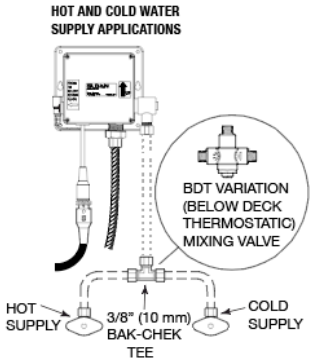

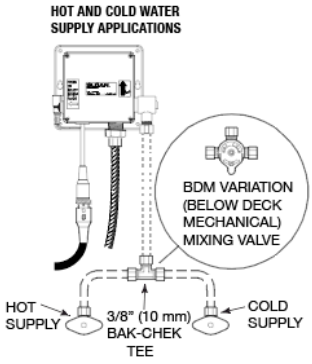

Sloan 10500 Seymour Ave, Franklin Park, IL 60131
Phone: 800.982.5839 • Fax: 800.447.8329 • sloan.com