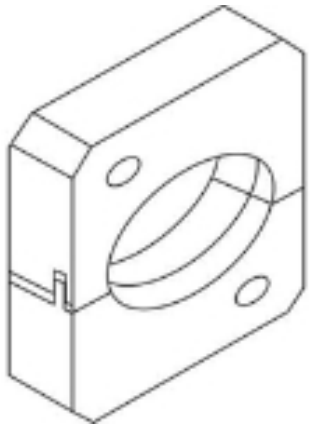

Die
T&B Catalog Number: GS1563
UPC Number: 78621086571
Status: Active
Description:

Crimp die (interchangeable) for Shield-Kon 13640 hydraulic head, for GSC 1563 connectors

Features

Interchangeable steel die for 13640 hydraulic head.
Quickly interchangeable. Circular crimp range.

General

Terminal Series	GSC1563
Material	Steel Alloy, black oxide finish
Die Color	Yellow
Tooling Functionality	Crimping
For Tooling Type	Hydraulic

Tooling

Application Tools	13640

Packaging

Package in Units	1
T&B Sold in UOM	Each
T&B Weight Per UOM	200 lbs. per 100

Certifications

RoHS Compliance	No

For further technical assistance, please contact us...

Thomas & Betts - USA
8155 T&B Blvd.
Memphis, TN 38125
www.tnb.com

T&B Technical Support
MS 3B-50
8155 T&B Blvd.
Memphis, TN 38125

Hours: 7AM - 6PM CDT
Monday-Friday
Phone: (888) 862-3289
Fax: (901) 252-1321
Email:techsupport@tnb.com