Special AG Waterpump / Integral Shaft Bearings

885152

Short Stem Culivator Bearing with Hole

John Deere AA21015 - AA35741
IHC 128558C91

Press Wheel & Closing Wheel
to fit John Deere 7000 - 7100 Planter
to fit IHC 800 Planter

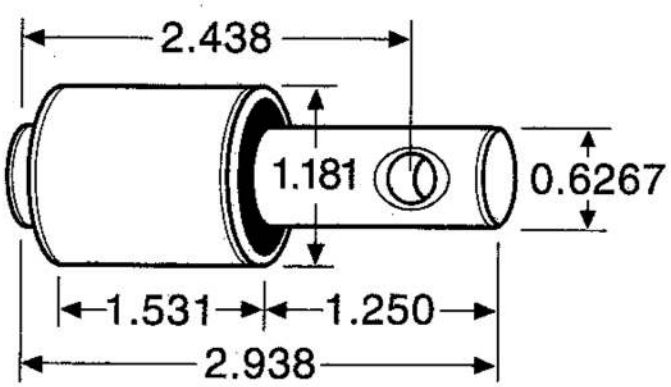

885154B

Short Stem Cultivator Bearing

John Deere AN131668
Massey F. 446612MI
Allis Chalmers 593891, 70593591

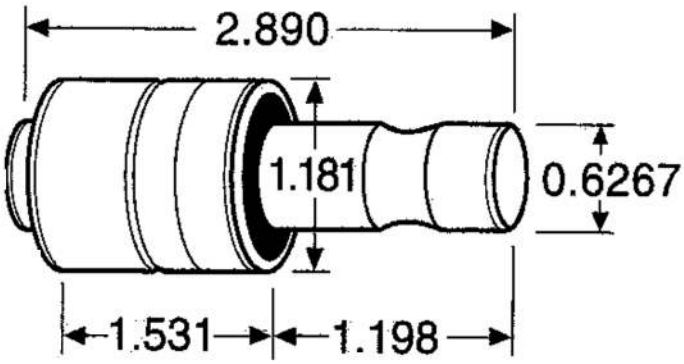

For more information call 888 4 bearings

Bearings Limited
Est. 1947