FARM IMPLEMENT BALL BEARINGS

TRI-PLY SEAL SERIES
NON-RELUBRICATABLE TYPE



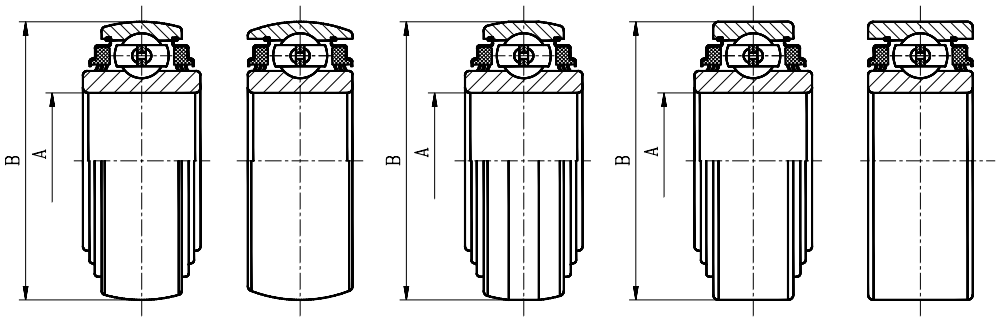

Type 1 Type 2 Type 3 Type 4 Type 5

ROUND BORE

Bearing No.	Type	Bearing Bore Size		Outside Diameter		Ring Width			
		A		B		Inner Ring		Outer Ring	
		(in.)	(mm)	(in.)	(mm)	(in.)	(mm)	(in.)	(mm)
205PPB7	1	0.9375	23.813	2.0472	52.00	1.3748	34.92	0.591	15.00
W208PPB7	1	1.1880	30.175	3.1496	80.00	1.1890	30.20	0.709	18.00
W208PP10	4	1.5005	38.113	3.1496	80.00	1.6910	42.96	0.827	21.00
W208PPB23	1	1.5005	38.113	3.1496	80.00	1.6910	42.96	1.189	30.20
W209PPB2	2	1.7717	45.000	3.3460	85.00	1.1890	30.20	1.189	30.20
W209PPB4	2	1.5350	39.000	3.3460	85.00	1.1890	30.20	1.189	30.20
W210PP2	5	1.9380	49.225	3.5433	90.00	1.1890	30.20	1.189	30.20
W210PPB2	2	1.9380	49.225	3.5433	90.00	1.1890	30.20	1.189	30.20
W211PP2	5	2.1880	55.575	3.9370	100.00	1.3130	33.34	1.313	33.34
W211PPB2	2	2.1880	55.575	3.9370	100.00	1.3130	33.34	1.313	33.34

SQUARE BORE

Bearing No.	Type	Bearing Bore Size		Outside Diameter		Ring Width			
		A		B		Inner Ring		Outer Ring	
		(in.)	(mm)	(in.)	(mm)	(in.)	(mm)	(in.)	(mm)
W208PPB13	1	7/8	23.117	3.1496	80.00	1.437	36.50	0.709	18.00
W208PPB6	1	1	26.162	3.1496	80.00	1.437	36.50	0.709	18.00
W208PP5	4	1-1/8	29.972	3.1496	80.00	1.437	36.50	0.709	18.00
W208PPB5	1	1-1/8	29.972	3.1496	80.00	1.437	36.50	0.709	18.00
W208PP8	4	1-1/8	29.972	3.1496	80.00	1.437	36.50	1.189	30.20
W208PPB8	1	1-1/8	29.972	3.1496	80.00	1.437	36.50	1.189	30.20
W208PPB11	3	7/8	23.117	3.3760	85.75	1.437	36.50	1.189	30.20
W208PPB12	3	1-1/8	29.972	3.3760	85.75	1.437	36.50	1.189	30.20
W209PPB5	1	1-1/4	32.766	3.3460	85.00	1.437	36.50	1.189	30.20
W210PP4	5	1-1/8	29.972	3.5433	90.00	1.189	30.20	1.189	30.20
W210PPB4	2	1-1/8	29.972	3.5433	90.00	1.189	30.20	1.189	30.20
W211PP3	5	1-1/2	38.890	3.9370	100.00	1.313	33.34	1.313	33.34
W211PPB3	2	1-1/2	38.890	3.9370	100.00	1.313	33.34	1.313	33.34
W211PP5	4	1-1/2	38.890	4.0000	101.60	1.750	44.45	1.438	36.52
W211PPB6	3	1-1/2	38.890	4.0772	103.56	1.750	44.45	1.438	36.52