FARM IMPLEMENT BALL BEARINGS

TRI-PLY SEAL SERIES
RELUBRICATABLE TYPE

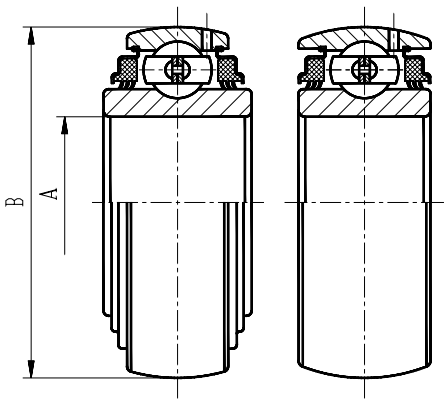

TYPE 1 TYPE 2

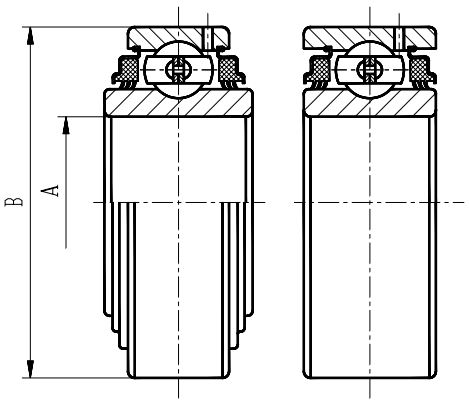

TYPE 3 TYPE 4



ROUND BORE

Bearing No.	Type	Bearing Bore Size		Outside Diameter		Ring Width			
		A		B		Inner Ring		Outer Ring	
		(in.)	(mm)	(in.)	(mm)	(in.)	(mm)	(in.)	(mm)
205PPB7G	1	0.9375	23.813	2.0472	52	1.375	34.92	0.591	15.00
GW209PPB4	2	1.5355	39.000	3.3465	85	1.189	30.20	1.189	30.2
GW209PPB2	2	1.7717	45.000	3.3465	85	1.189	30.20	1.189	30.20
GW209PPB11	1	1.7810	45.240	3.3465	85	1.437	36.50	0.866	22.00
GW210PPB2	2	1.9380	49.225	3.5433	90	1.189	30.20	1.189	30.20
GW211PPB2	2	2.1880	55.575	3.9370	100	1.313	33.34	1.313	33.34

SQUARE BORE

Bearing No.	Type	Bearing Bore Size		Outside Diameter		Ring Width			
		A		B		Inner Ring		Outer Ring	
		(in.)	(mm)	(in.)	(mm)	(in.)	(mm)	(in.)	(mm)
GW208PPB5	1	1-1/8	29.972	3.1496	80.000	1.437	36.50	0.827	21.00
GW208PPB8	1	1-1/8	29.972	3.1496	80.000	1.437	36.50	1.189	30.20
GW208PPB17	1	1-1/8	29.972	3.3755	85.738	1.437	36.50	1.189	30.20
GW209PPB5	1	1-1/4	32.766	3.3465	85.000	1.437	36.50	1.189	30.20
GW209PPB8	1	1-1/4	32.766	3.3465	85.000	1.437	36.50	0.866	22.00
GW210PP4	4	1-1/8	29.972	3.5433	90.000	1.189	30.20	1.189	30.20
GW210PPB4	2	1-1/8	29.972	3.5433	90.000	1.189	30.20	1.189	30.20
GW211PP3	4	1-1/2	38.890	3.9370	100.00	1.313	33.34	1.313	33.34
GW211PPB3	2	1-1/2	38.890	3.9370	100.00	1.313	33.34	1.313	33.34
GW211PP17	3	1-1/2	38.890	3.9370	100.00	1.750	44.45	1.313	33.34