CS & CL SERIES

DIMENSIONS

INTRODUCING SIMPLICITY FOR CALIBRATING MODULATING ACTUATORS

The control board brings a whole new level of simplicity to the field. It will work with either of the motor boards (115VAC or 230VAC).

FEATURES INCLUDE:

- Switch selector for 4-20mA or 0-10VDC input
- Switch selector for 4-20mA or 0-10VDC position readback
- Switch selector for either "fail in-place" or "fail to zero" upon loss of control signal (provided input power remains)
- On-board push buttons to manually position the actuator
- A "Mode Selector" switch with LEDs, which are used for:
  - "No tools" pot calibration
  - Setting Zero and span
  - Manually positioning the actuator
- An adjustable pot for speed control (motor pulsing)
- An adjustable pot for deadband adjustment
- Locked rotor protection if the actuator cannot achieve the position commanded by the control signal, it will cut power to the motor. Repeated stalls will not damage the actuator.
- Reverse acting operation with no rewiring.
- Split range operation with no rewiring.

CS DIMENSIONS

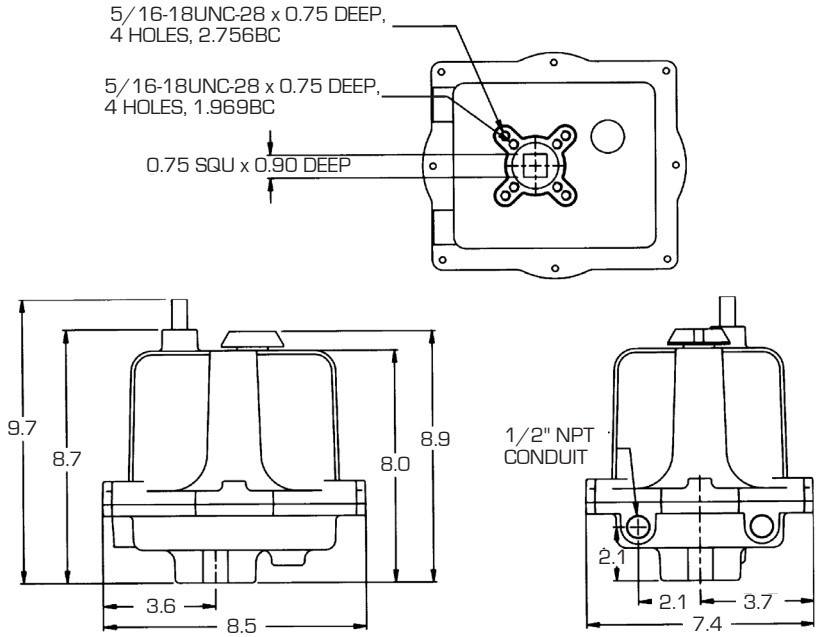

CL DIMENSIONS

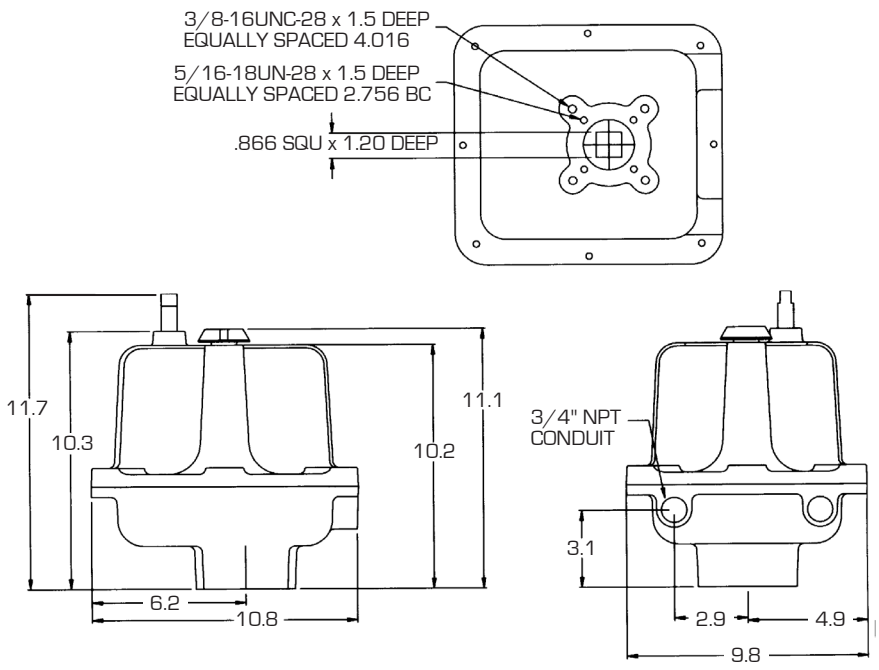

aalberts integrated piping systems

CS & CL SERIES

SPECIFICATIONS & OPTIONS

CS & CL EXTENDED DUTY DATA

TECHNICAL DATA—115VAC AND 230VAC MODELS*

SERIES	TORQUE OUTPUT (BREAKAWAY)	SPEED (SECONDS PER 90° ROTATION)	DUTY CYCLE	VA RATING		MAX RUNNING CURRENT AT FULL LOAD (TRUE RMS)		MAX EFFECTIVE PEAK INRUSH CURRENT (=.66 X PEAK INRUSH)	
				115 VAC	230 VAC	115 VAC	230 VAC	115 VAC	230 VAC
CS	150 in lb	8	75%	70vA	115vA	0.6 amps	0.5 amps	1.25 amps	0.924 amps
	300 in lb	15	75%	70vA	115vA	0.6 amps	0.5 amps	1.25 amps	0.924 amps
	600 in lb	30	75%	70vA	115vA	0.6 amps	0.5 amps	1.25 amps	0.924 amps
CL	1000 in lb	25	75%	92vA	161vA	0.8 amps	0.7 amps	1.66 amps	1.29 amps
	1500 in lb	40	75%	92vA	161vA	0.8 amps	0.7 amps	1.66 amps	1.29 amps
	2000 in lb	55	75%	92vA	161vA	0.8 amps	0.7 amps	1.66 amps	1.29 amps
	2500 in lb	70	75%	92vA	161vA	0.8 amps	0.7 amps	1.66 amps	1.29 amps
	3000 in lb	75	55%	92vA	161vA	0.8 amps	0.7 amps	1.66 amps	1.29 amps

CS & CL CONTINUOUS DUTY DATA

SERIES	TORQUE (IN-LB)	DUTY CYCLE	12 VDC		24 VDC		24 VAC		115 VAC		230 VAC	
			CYCLE TIME (SEC/90°)	CURRENT DRAW AMPS	CYCLE TIME (SEC/90°)	CURRENT DRAW AMPS	CYCLE TIME (SEC/90°)	CURRENT DRAW AMPS	CYCLE TIME (SEC/90°)	CURRENT DRAW AMPS	CYCLE TIME (SEC/90°)	CURRENT DRAW AMPS
CS	150	100%	11	2.2	13	1.2	8	1.8	9	0.4	9	0.4
	300	100%	17	2.5	13	1.4	12	2.1	13	0.5	13	0.4
	600	100%	17	2.8	13	1.7	13	2.5	14	0.6	14	0.5
CL	1000	100%	21	4	14	2.4	15	3.5	15	0.9	15	0.6
	1500	100%	40	4	24	2.4	27	3.5	29	0.9	29	0.6
	2000	100%	40	4.3	33	2.4	28	3.5	29	0.9	29	0.6
	2500	100%	55	3.3	40	2	38	3.1	39	0.8	39	0.6
	3000	100%	60	3.7	42	2.2	40	3.5	42	0.8	43	0.6

Notes:

1. *The Current Draws stated above include all options. If the brake and/or heater & thermostat are not installed, the actual current draws will be less.*
2. *For Extended Duty Cycle Models, Current Draws are provided at full running torque. If the actuator encounters an overtorque condition, such as a stall condition, the Current Draw will be vastly increased.*
3. *Continuous Duty actuators contain brushless DC motors and are therefore not limited by duty cycle restraints in environments at or below 104°F; in ambient environments above this temperature the duty cycle is de-rated to 80%.*

ACTUATOR MODEL NUMNBERS/DESCRIPTION

- 115 — 115 VAC Motor (Standard or Continuous)
- 230 VAC — 230 VAC Motor (Standard or Continuous)
- J — Speed Control/Timer Board
- X — NEMA 4,4X,7 & 9
- W — NEMA 4 & 4X
- H — Tropical Heater
- S2 — Two Auxiliary Switches SPDT
- T — Heater and Thermostat
- K — Motor Brake[2]
- Z — Declutchable Handwheel Override
- P — Feedback Potentiometer (0-1000 Ohm)

• CSA certification with (C US) marking is standard on all standard (extended) duty models.

• CSA certification with (C US) marking is standard on continuous duty models ordered with enclosure option "E".

[2] Standard on continuous duty cycle units

CS & CL SERIES

HOW TO ORDER

HOW TO ORDER CS & CL EXTENDED DUTY CYCLE ACTUATOR

PART NUMBER MATRIX

SERIES	TORQUE	ENCLOSURE	GENERAL OPTIONS	DUTY CYCLE	VOLTAGE
CS	600	W	S2	E - STANDARD	115 VAC
CL	1500	X	S2	E - STANDARD	230 VAC

HOW TO ORDER CS CONTINUOUS DUTY CYCLE ACTUATOR

PART NUMBER MATRIX

3RA	CS	600	W	UL2	Z
PREFIX	SERIES	TORQUE	ENCLOSURE	OPTIONS[2]	ADDITIONAL OPTIONS
3RA	CS	150 IN-LB, 12 FT-LB, 17 NM	W - NEMA 4/4X	U2 - ON/OFF/POSITION BOARD	-- NO ENTRY IF STANDARD
		300 IN-LB, 25 FT-LB, 34 NM	X - NEMA 4/4X/7&9	UL2 - ON/OFF/POSITION BOARD	Z - HANDWHEEL
		600 IN-LB, 50 FT-LB, 68 NM		W/ BATTERY BACKUP	

HOW TO ORDER CL CONTINUOUS DUTY CYCLE ACTUATOR

PART NUMBER MATRIX

3RA	CL	2500	X	UL3	-
PREFIX	SERIES	TORQUE	ENCLOSURE	OPTIONS[2]	ADDITIONAL OPTIONS
3RA	CL	1000 IN-LB, 83 FT-LB, 113 NM	W - NEMA 4/4X	U2 - ON/OFF/POSITION BOARD	-- NO ENTRY IF STANDARD
		1500 IN-LB, 125 FT-LB, 169 NM	X - NEMA 4/4X/7&9	UL3 - ON/OFF/POSITION BOARD	Z - HANDWHEEL
		2000 IN-LB, 167 FT-LB, 226 NM		W/ BATTERY BACKUP	
		2500 IN-LB, 208 FT-LB, 282 NM			
		3000 IN-LB, 250 FT-LB, 339 NM			

1. All Continuous Duty Cycle CS/CL actuators accept any of the following input voltage (12VDC, 24VDC, 24VAC, 115VAC, & 230VAC), are rated for continuous duty cycle, include a holding brake, two auxiliary limit switches, 4-20mA or 0-10VDC position feedback, wrench-operated manual override, CSA "C US" certification, CE compliance, and a heater/thermostat that can be user-enabled on the option board.

2. Only one board option can (and must) be selected. All board options can be configured for On/Off or modulating operation.