ELKAY®
SPECIFICATIONS

Elkay® Foodservice 8" Centerset Wall Mount Faucet with 10" Arc Tube Spout 2" Lever Handles 1/2" Offset Inlets+Stop

Model(s) LK940AT10L2S

PRODUCT SPECIFICATIONS

Elkay® Foodservice 8" Centerset Wall Mount Faucet with 10" Arc Tube Spout 2" Lever Handles 1/2" Offset Inlets+Stop. Faucet has a flow rate of 1.5 GPM, and is made of Chrome-plated Brass material, with a Quarter Turn Ceramic Disc valve. Faucet requires 2 faucet holes.

Mounting Type:	Wall Mount
Special Features:	1/2" Adjustable Inlets with Integral Stops Low Flow Solid Brass Construction
Finish:	Chrome (CR)
Handle Type:	2" Lever Handle
Deck Clearance:	4-3/16"
Spout Reach:	10"
Spout Height:	6-13/16"
Hole Drillings:	2
Material:	Chrome-plated Brass
Valve Type:	Quarter Turn Ceramic Disc
Valve Connection:	1/2" NPT Female
Flow Rate:	1.5 GPM
Faucet Hole Size (min):	1-1/2"
Faucet Hole Spread:	8
Spout Type:	Arc Tube



Chrome (CR)



Included with Product: **Shut-off**

A Century of Tradition and Quality.
For more than 100 years, Elkay has been making innovative products and providing exceptional customer care. We take pride in offering plumbing products that make life easier, inspire change and leave the world a better place.

Product Compliance: ADA & ICC A117.1
ASME A112.18.1/CSA B125.1
CEC
NSF 372 (lead free)
NSF 61 (Q≤1)

Complies with ADA & ICC A117.1 accessibility requirements when installed according to the requirements outlined in these standards.

Clean and Care Manual (PDF)
Installation Instructions (PDF) - A55483
Warranty (PDF)

PART:_____QTY: _____

PROJECT:_____

CONTACT:_____

DATE:_____

NOTES:_____

APPROVAL:_____

In keeping with our policy of continuing product improvement, Elkay reserves the right to change product specifications without notice. Please visit elkay.com for the most current version of Elkay product specification sheets. This specification describes an Elkay product with design, quality, and functional benefits to the user. When making a comparison of other producers' offerings, be certain these features are not overlooked.

Elkay® Foodservice 8" Centerset Wall Mount Faucet with 10" Arc Tube Spout 2" Lever Handles 1/2" Offset Inlets+Stop

Model(s) LK940AT10L2S

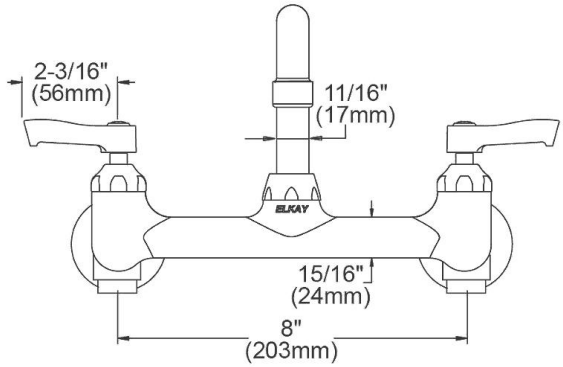

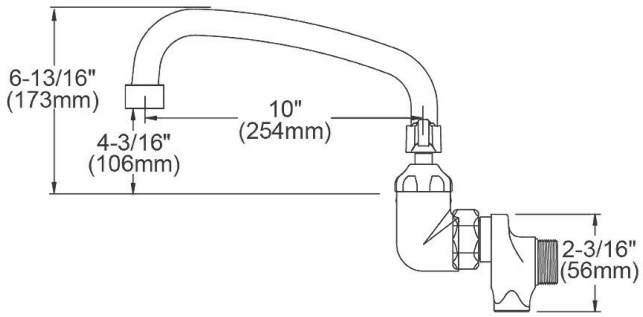

In keeping with our policy of continuing product improvement, Elkay reserves the right to change product specifications without notice. Please visit elkay.com for the most current version of Elkay product specification sheets. This specification describes an Elkay product with design, quality, and functional benefits to the user. When making a comparison of other producers' offerings, be certain these features are not overlooked.

Elkay® Foodservice 8" Centerset Wall Mount Faucet with 10" Arc Tube Spout 2" Lever Handles 1/2" Offset Inlets+Stop

Model(s) LK940AT10L2S

ITEM	IND. PART	DESCRIPTION
1	A55395	Spout
2	45918C	Handle, 2"
3	45923C	Right Cold Cartridge
4	45924C	Left Hot Cartridge
5	A55413	1/2" Adjustable Inlet
6	45912C	Body
7	LK734	2.2 GPM VR Aerator

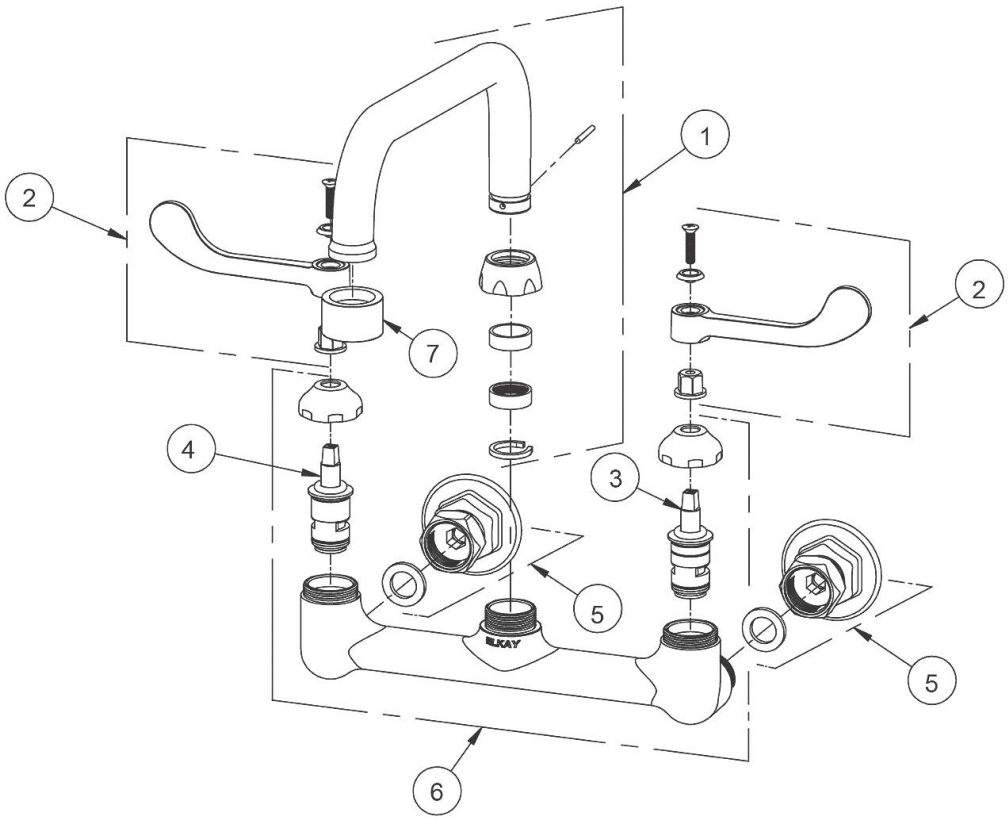

In keeping with our policy of continuing product improvement, Elkay reserves the right to change product specifications without notice. Please visit elkay.com for the most current version of Elkay product specification sheets. This specification describes an Elkay product with design, quality, and functional benefits to the user. When making a comparison of other producers' offerings, be certain these features are not overlooked.