ELKAY®
SPECIFICATIONS

Elkay® Foodservice 3-8" Adjustable Centers Wall Mount Faucet with 4" Gooseneck Spout 4" Wristblade Handles 2" Inlet

Model(s) LK945GN04T4T

PRODUCT SPECIFICATIONS

Elkay® Foodservice 3-8" Adjustable Centers Wall Mount Faucet with 4" Gooseneck Spout 4" Wristblade Handles 2" Inlet. Faucet has a flow rate of 1.5 GPM, and is made of Chrome-plated Brass material, with a Quarter Turn Ceramic Disc valve. Faucet requires 2 faucet holes.

Mounting Type:	Wall Mount
Special Features:	Low Flow Solid Brass Construction Spout Swing Restriction Pin
Finish:	Chrome (CR)
Handle Type:	4" Wristblade Handle
Deck Clearance:	6-1/8"
Spout Reach:	3-5/8"
Spout Height:	8-11/16"
Hole Drillings:	2
Material:	Chrome-plated Brass
Valve Type:	Quarter Turn Ceramic Disc
Valve Connection:	Offset Adj 1/2" NPT Female Inl
Flow Rate:	1.5 GPM
Faucet Hole Size (min):	1-1/2"
Faucet Hole Spread:	3-3/8" to 8-1/2" Adjustable Spread
Spout Type:	Gooseneck

Special Note: 1.5 GPM VR aerator installed with 2.2 and .5 GPM inserts included



Chrome (CR)



A Century of Tradition and Quality.
For more than 100 years, Elkay has been making innovative products and providing exceptional customer care. We take pride in offering plumbing products that make life easier, inspire change and leave the world a better place.

Product Compliance: ADA & ICC A117.1
ASME A112.18.1/CSA B125.1
CEC
NSF 372 (lead free)
NSF 61 (Q≤1)

Complies with ADA & ICC A117.1 accessibility requirements when installed according to the requirements outlined in these standards.

Clean and Care Manual (PDF)
Installation Instructions (PDF) - A55483
Warranty (PDF)

PART:_____QTY: _____

PROJECT:_____

CONTACT:_____

DATE:_____

NOTES:_____

APPROVAL:

In keeping with our policy of continuing product improvement, Elkay reserves the right to change product specifications without notice. Please visit elkay.com for the most current version of Elkay product specification sheets. This specification describes an Elkay product with design, quality, and functional benefits to the user. When making a comparison of other producers' offerings, be certain these features are not overlooked.

© 2023

Elkay® Foodservice 3-8" Adjustable Centers Wall Mount Faucet with 4" Gooseneck Spout 4" Wristblade Handles 2" Inlet

Model(s) LK945GN04T4T

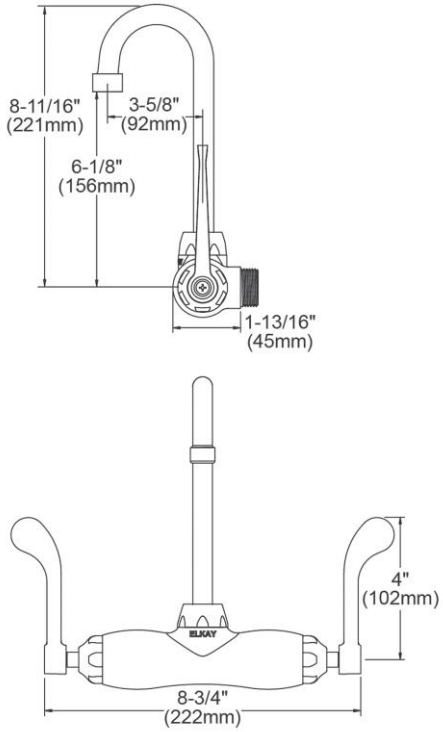

In keeping with our policy of continuing product improvement, Elkay reserves the right to change product specifications without notice. Please visit elkay.com for the most current version of Elkay product specification sheets. This specification describes an Elkay product with design, quality, and functional benefits to the user. When making a comparison of other producers' offerings, be certain these features are not overlooked.

Elkay® Foodservice 3-8" Adjustable Centers Wall Mount Faucet with 4" Gooseneck Spout 4" Wristblade Handles 2" Inlet

Model(s) LK945GN04T4T

ITEM	IND. PART	DESCRIPTION
1	A55397	Spout
2	45919C	Handle, 4"
3	45923C	Right Cold Cartridge
4	45924C	Left Hot Cartridge
5	A55413	2" Adjustable Inlet
6	45913C	Body
7	LK734	2.2 GPM VR Aerator

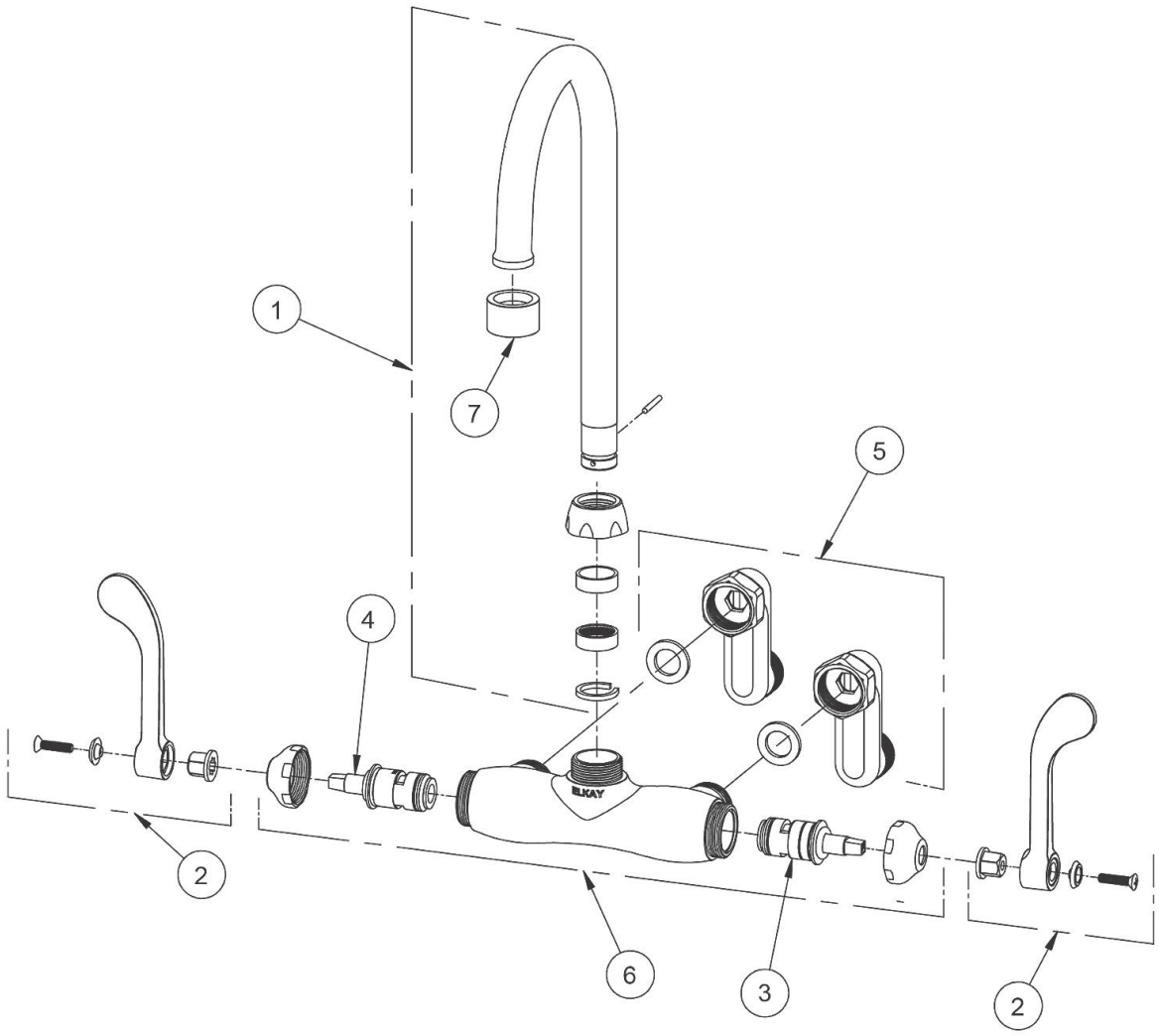

In keeping with our policy of continuing product improvement, Elkay reserves the right to change product specifications without notice. Please visit elkay.com for the most current version of Elkay product specification sheets. This specification describes an Elkay product with design, quality, and functional benefits to the user. When making a comparison of other producers' offerings, be certain these features are not overlooked.