ELKAY®
SPECIFICATIONS

Elkay ezH2O Bottle Filling Station & Soft Sides Single Fountain Filtered Refrigerated Stainless
Model LZWS-SS8K

PRODUCT SPECIFICATIONS

Elkay ezH2O® Bottle Filling Station & Soft Sides® Single Fountain Filtered Refrigerated Stainless. Chilling Capacity of 8.0 GPH (gallons per hour) of 50° F drinking water, based on 80° F inlet water and 90° F ambient, per ASHRAE 18 testing. Features shall include Antimicrobial*, Filtered, Green Ticker™, Hands Free, Laminar Flow, Real Drain, Visual Filter Monitor. Furnished with Vandal Resistant bubbler. Electronic Bottle Filler Sensor with Mechanical Front Bubbler Button activation. Product shall be Wall Mount (Inwall Frame/Plate), for Indoor applications, serving 2 station(s). Unit shall be certified to UL 399 and CAN/CSA C22.2 No. 120.

Special Features:	Antimicrobial, Filtered, Green Ticker™, Hands Free, Laminar Flow, Real Drain, Visual Filter Monitor
Finish:	Stainless Steel
Power:	115V/60Hz
Bubbler Style:	Vandal Resistant
Activation by:	Electronic Bottle Filler Sensor with Mechanical Front Bubbler Button
Mounting Type:	Wall Mount (Inwall Frame/Plate)
Chilling Capacity*:	8.0 GPH
Full Load Amps	1
Rated Watts:	370
Dimensions (L x W x H):	39-1/2" x 18" x 40-13/16"
Approx. Shipping Weight:	126 lbs.
Installation Location:	Indoor
No. of Stations Served:	2
*Based on 80° F inlet water & 90° F ambient air temp for 50° F chilled drinking water.	

- Mechanically-Activated bubbler continues to supply water in event of service disruptions.
- Visual Filter Monitor: LED Filter Status Indicator for when filter change is necessary.
- Filter is certified to NSF 42 and 53 for lead, cyst, particulate, chlorine, taste and odor reduction. 3,000 gal. capacity.
- Green Ticker: Informs user of number of 20 oz. plastic water bottles saved from waste.
- Laminar flow provides clean fill with minimal splash.
- Key plastic components are manufactured with silver ion antimicrobial agent helping to provide clean, stain- and odor-free surfaces.
- Real Drain System eliminates standing water.

*Antimicrobial claims are in refence to components manufactured antimicrobial agents, helping to provide clean, stain- and odor-free surfaces.

PART:_____QTY: _____

PROJECT:_____

CONTACT:_____

DATE:_____

NOTES:_____

APPROVAL:_____



Included with Product: **Fountain (ERFPD8C), Chiller (ECH8), Mounting Frame (MF100), Bottle Filler (LZWSMDC), Mounting Frame (MFWS100), Filter (EWF3000)**

▼ Ships in multiple boxes.

A Century of Tradition and Quality.
For more than 100 years, Elkay has been making innovative products and providing exceptional customer care. We take pride in offering plumbing products that make life easier, inspire change and leave the world a better place.

PRODUCT COMPLIANCE

ADA & ICC A117.1

ASME A112.19.3/CSA B45.4

CAN/CSA C22.2 No. 120

GreenSpec®

NSF/ANSI 42, 53, 61 (Q≤1), & 372 (lead free)

UL 399

Complies with ADA & ICC A117.1 accessibility requirements when installed according to the requirements outlined in these standards. Installation may require additional components and/or construction features to be fully compliant. Consult the local Authority Having Jurisdiction if necessary.

Installation Instructions (PDF) - 1000003097
Installation Instructions (PDF) - 97869C
Installation Instructions (PDF) - 98557C
Installation Instructions (PDF) - 97153C
Installation Instructions (PDF) - 98560C

5 Year Limited Warranty on the refrigeration system of the unit. Electrical components and water system are warranted for 12 months from date of installation. **Warranty pertains to drinking water applications only. Non-drinking water applications are not covered under warranty.**

Warranty (PDF)

In keeping with our policy of continuing product improvement, Elkay reserves the right to change product specifications without notice. Please visit elkay.com for the most current version of Elkay product specification sheets. This specification describes an Elkay product with design, quality, and functional benefits to the user. When making a comparison of other producers' offerings, be certain these features are not overlooked.

COOLING SYSTEM

- Compressor: Hermetically-sealed, reciprocating type, single phase. Sealed-in lifetime lubrication.
- Condenser: Fan cooled, copper tube with aluminum fins. Fan motor is permanently lubricated.
- Cooling Unit: Combination tube-tank type. Continuous copper tubing with is fully insulated with EPS foam that meets UL requirements for self-extinguishing material.
- Refrigerant Control: Refrigerant R-134a is controlled by accurately calibrated capillary tube.
- Temperature Control: Easily accessible enclosed adjustable thermostat is factory preset. Requires no adjustment other than for altitude requirements.

Optional Accessories		
51300C	Elkay WaterSentry Replacement Filter (Bottle Fillers & Liv Pro) Spec Sheet (PDF)	
WSF6000R-2PK	WaterSentry 6000 CTO Replacement Filter (2pack) Spec Sheet (PDF)	NO IMAGE AVAILABLE
97258C	Cane Apron for Contour & Soft Sides Models Black Spec Sheet (PDF)	

In keeping with our policy of continuing product improvement, Elkay reserves the right to change product specifications without notice. Please visit elkay.com for the most current version of Elkay product specification sheets. This specification describes an Elkay product with design, quality, and functional benefits to the user. When making a comparison of other producers' offerings, be certain these features are not overlooked.

Elkay ezH2O Bottle Filling Station & Soft Sides Single Fountain Filtered Refrigerated Stainless
Model LZWS-SS8K

OPERATION OF QUICK CONNECT FITTINGS

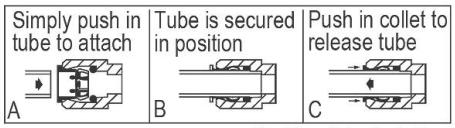

Pushing tube in before pulling it out helps to release tube

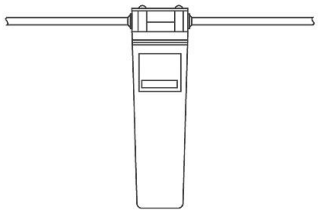

WaterSentry® Plus Filter System

IMPORTANT!
INSTALLER PLEASE NOTE :

The grounding of electrical equipment such as telephone, computers, etc., to water lines is a common procedure. This grounding may be in the building or may occur away from the building. This grounding can cause electrical feedback into a water cooler, creating an electrolysis which causes a metallic taste or causes an increase in the metal content of the water. This condition is avoidable by using the proper materials as indicated below. The drain fittings which are provided by the installer should also be plastic to electrically isolate the cooler from the building plumbing system.
These products are designed to operate on 20 psi to 105 psi supply line pressure.

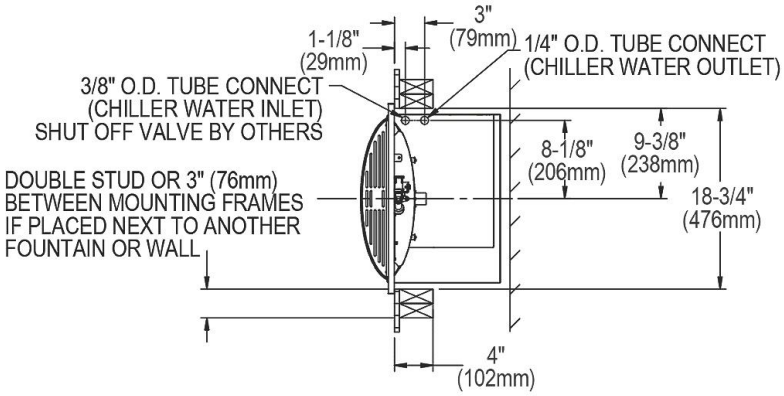

BOTTLE FILLER SPECIFICATIONS

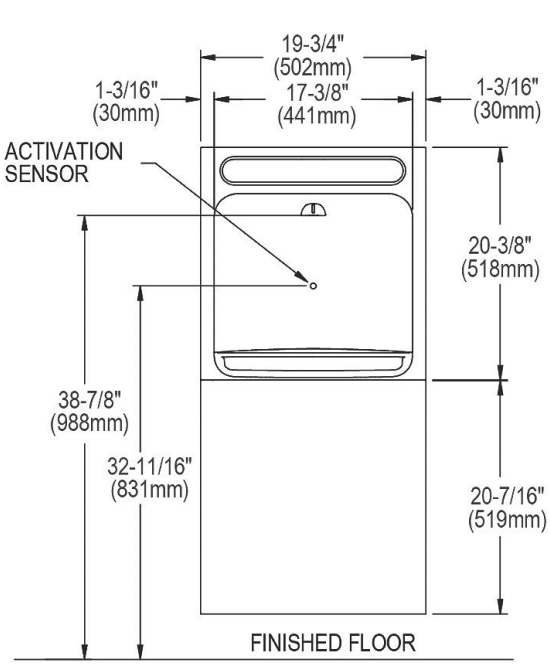

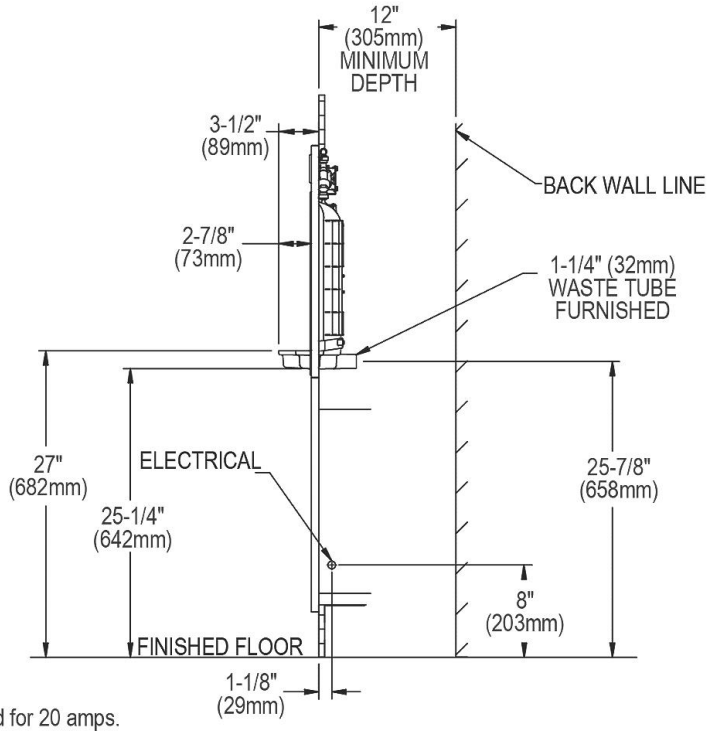

Note : New Installations Must Use Ground Fault Circuit Interrupter (GFCI).
It is highly recommended that the circuit be dedicated and the load protection be sized for 20 amps.

In keeping with our policy of continuing product improvement, Elkay reserves the right to change product specifications without notice. Please visit elkay.com for the most current version of Elkay product specification sheets. This specification describes an Elkay product with design, quality, and functional benefits to the user. When making a comparison of other producers' offerings, be certain these features are not overlooked.

MOUNTING FRAME MFWS100 WITH CHILLER SHELF

IMPORTANT!
INSTALLER PLEASE NOTE:

The grounding of electrical equipment such as telephone, computers, etc., to water lines is a common procedure. This grounding may be in the building or may occur away from the building. This grounding can cause electrical feedback into a water cooler, creating an electrolysis which causes a metallic taste or causes an increase in the metal content of the water. This condition is avoidable by using the proper materials as indicated below. The drain fittings which are provided by the installer should also be plastic to electrically isolate the cooler from the building plumbing system.

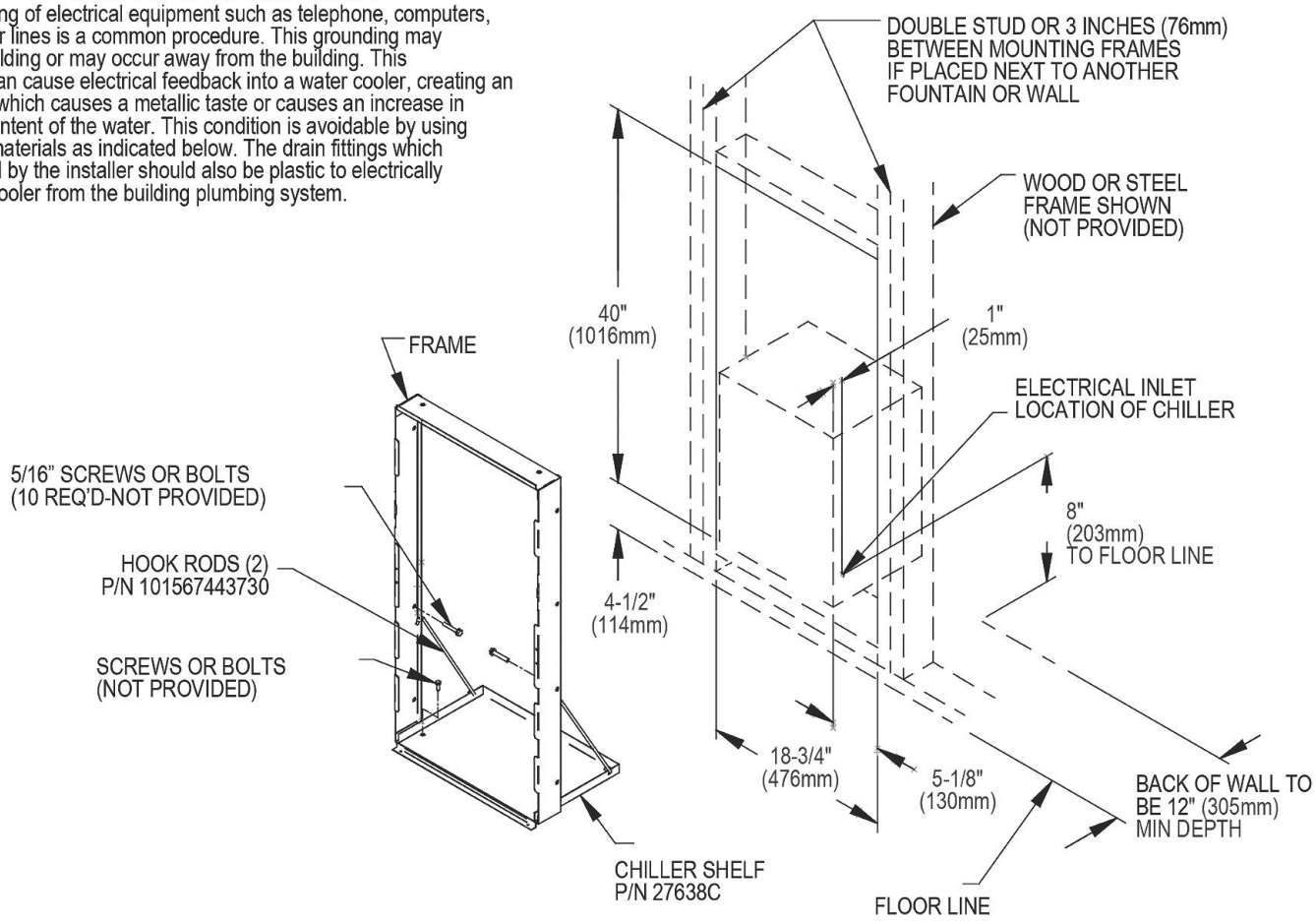

In keeping with our policy of continuing product improvement, Elkay reserves the right to change product specifications without notice. Please visit elkay.com for the most current version of Elkay product specification sheets. This specification describes an Elkay product with design, quality, and functional benefits to the user. When making a comparison of other producers' offerings, be certain these features are not overlooked.

IMPORTANT!
INSTALLER PLEASE NOTE :

The grounding of electrical equipment such as telephone, computers, etc., to water lines is a common procedure. This grounding may be in the building or may occur away from the building. This grounding can cause electrical feedback into a water cooler, creating an electrolysis which causes a metallic taste or causes an increase in the metal content of the water. This condition is avoidable by using the proper materials as indicated below. The drain fittings which are provided by the installer should also be plastic to electrically isolate the cooler from the building plumbing system.
These products are designed to operate on 20 psi to 105 psi supply line pressure.

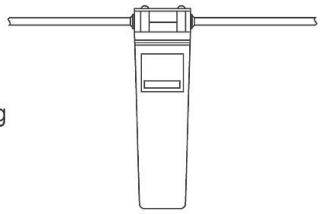

WaterSentry® Plus Filter System

OPERATION OF QUICK CONNECT FITTINGS

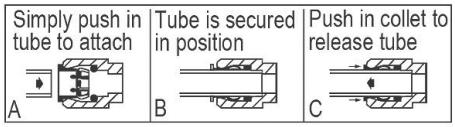

Pushing tube in before pulling it out helps to release tube

WATER FOUNTAIN SPECIFICATIONS

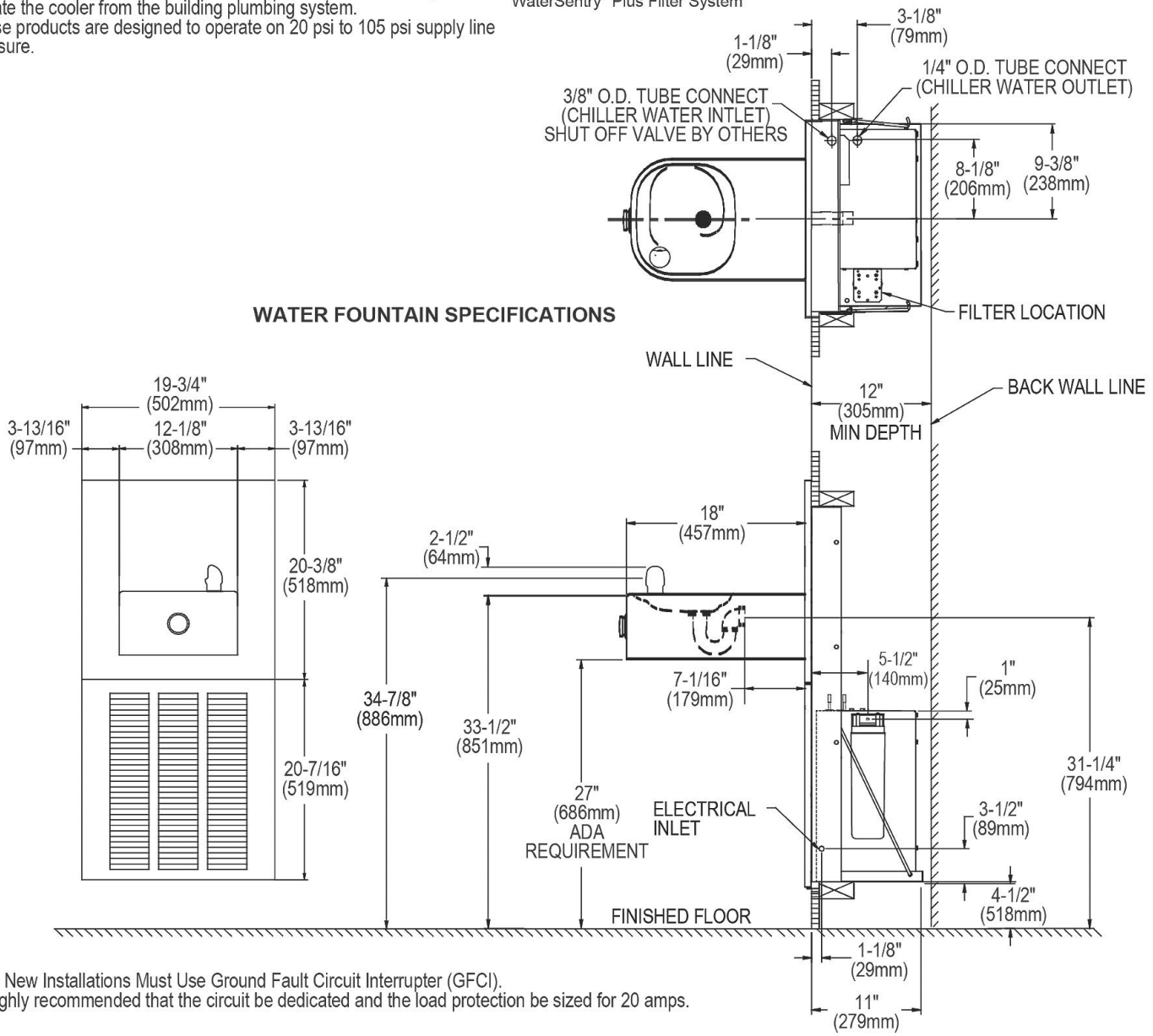

Note : New Installations Must Use Ground Fault Circuit Interrupter (GFCI).
It is highly recommended that the circuit be dedicated and the load protection be sized for 20 amps.

In keeping with our policy of continuing product improvement, Elkay reserves the right to change product specifications without notice. Please visit elkay.com for the most current version of Elkay product specification sheets. This specification describes an Elkay product with design, quality, and functional benefits to the user. When making a comparison of other producers' offerings, be certain these features are not overlooked.

MOUNTING FRAME MF100

IMPORTANT!
INSTALLER PLEASE NOTE:
The grounding of electrical equipment such as telephone, computers, etc., to water lines is a common procedure. This grounding may be in the building or may occur away from the building. This grounding can cause electrical feedback into a water cooler, creating an electrolysis which causes a metallic taste or causes an increase in the metal content of the water. This condition is avoidable by using the proper materials as indicated below. The drain fittings which are provided by the installer should also be plastic to electrically isolate the cooler from the building plumbing system.

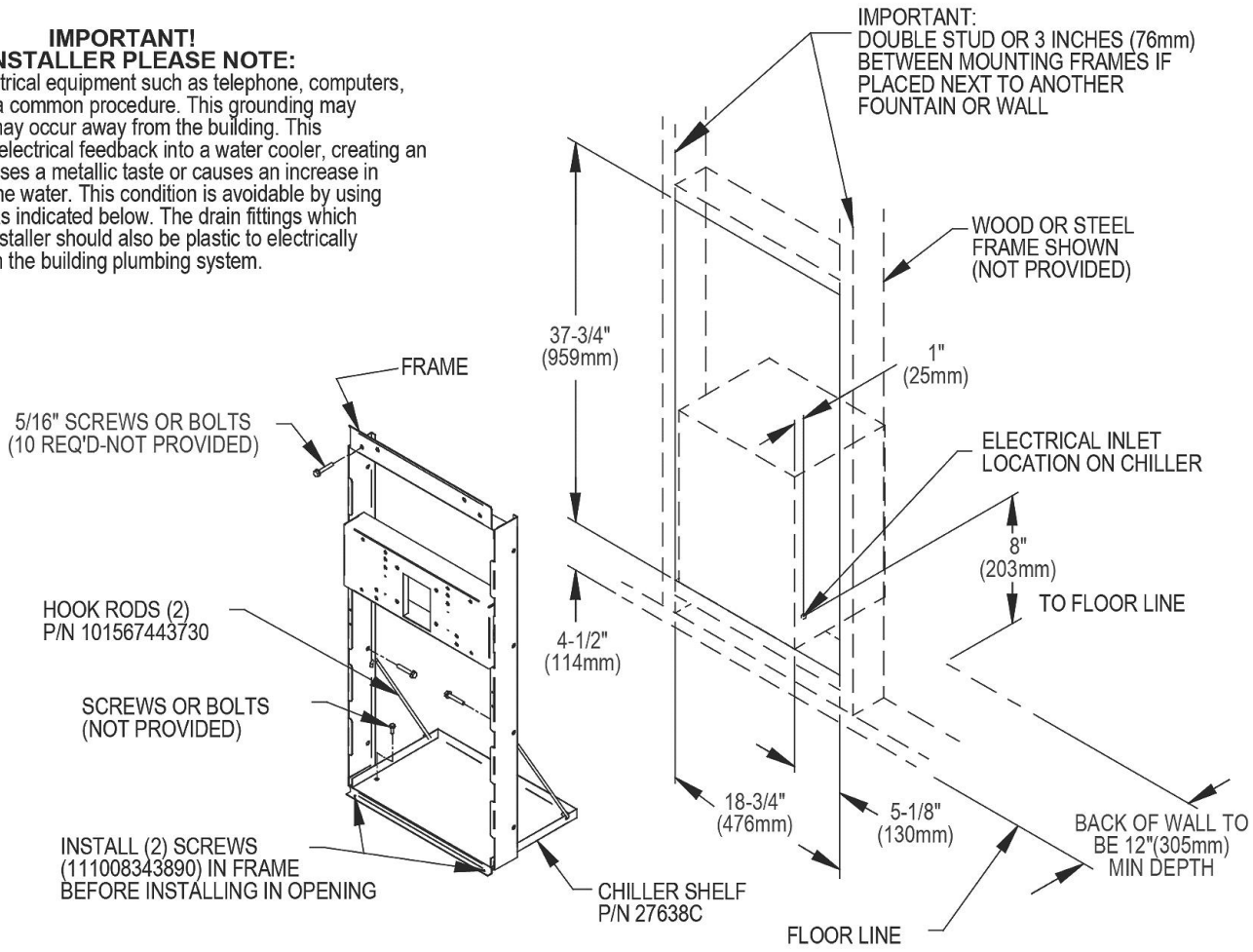

In keeping with our policy of continuing product improvement, Elkay reserves the right to change product specifications without notice. Please visit elkay.com for the most current version of Elkay product specification sheets. This specification describes an Elkay product with design, quality, and functional benefits to the user. When making a comparison of other producers' offerings, be certain these features are not overlooked.