14E
- Excellent water removal efficiency
- Unbalanced poppet standard
- Solid control piston for extended life
- Space saving package offers both filter and regulator features in one integral unit
- Non-rising adjustment knob
- Two full flow 1/8" gauge ports

B34
- Excellent water removal efficiency diaphragm operated for fast operation
- Large diaphragm to valve area for precise regulation and high flow capacity
- Balanced valve design for precise regulation
- Space saving package offers both filter and regulator features in one integral unit
- Non-rising adjustment knob



14E



B34

Operating information

	14E	B34
Pressure rating –		
Polycarbonate bowl	0 to 150 PSIG (0 to 10.3 bar)	0 to 150 PSIG (0 to 10.3 bar)
Metal bowl	0 to 250 PSIG (0 to 17.2 bar)	0 to 300 PSIG (0 to 17.2 bar)
Secondary pressure ranges:	Standard pressure 2 to 125 PSIG (0 to 8.6 bar) Medium pressure 1 to 30 PSIG (0 to 2.1 bar) Medium pressure 1 to 60 PSIG (0 to 4.1 bar) Low pressure 1 to 15 PSIG (0 to 1 bar)	Reduced pressure ranges 0 to 25 PSIG (0 to 1.7 bar) 1 to 60 PSIG (0 to 4.1 bar) 2 to 125 PSIG (0.15 to 8.5 bar)
Temperature rating –		
Polycarbonate bowl	32°F to 125°F (0°C to 52°C)	40°F to 125°F (4.4°C to 52°C)
Metal bowl	32°F to 175°F (0°C to 80°C)	40°F to 125°F (4.4°C to 52°C)

For technical information see CD

Miniature Filter / Regulators

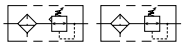

	Port size	Bowl type	Drain type	Flow SCFM	Element type	Part number (NPT) Pressure range 30 PSIG	60 PSIG	125 PSIG
14E	1/8"	Poly	Twist	16	5 micron	**14E01B10FC**	**14E01B11FC**	**14E01B13FC**
	1/8"	Poly	Auto pulse	16	5 micron	**14E05B10FC**	**14E05B11FC**	**14E05B13FC**
	1/8"	Metal	Twist	16	5 micron	**14E03B10FC**	**14E03B11FC**	**14E03B13FC**
	1/8"	Metal	Auto pulse	16	5 micron	**14E07B10FC**	**14E07B11FC**	**14E07B13FC**
	1/4"	Poly	Twist	18	5 micron	**14E11B10FC**	**14E11B11FC**	**14E11B13FC**
	1/4"	Poly	Auto pulse	18	5 micron	**14E15B10FC**	**14E15B11FC**	**14E15B13FC**
	1/4"	Metal	Twist	18	5 micron	**14E13B10FC**	**14E13B11FC**	**14E13B13FC**
	1/4"	Metal	Auto pulse	18	5 micron	**14E17B10FC**	**14E17B11FC**	**14E17B13FC**
B34 	1/8"	Poly	Twist	17	5 micron			**B344-01AGC**
	1/8"	Metal	Twist	17	5 micron			**B344-01DGC**
	1/4"	Poly	Twist	19	5 micron			**B344-02AGC**
	1/4"	Metal	Twist	19	5 micron			**B344-02DGC**

* Engineering level will be added at factory.

⚠ WARNING
Product rupture can cause serious injury.
Do not connect regulator to bottled gas.
Do not exceed maximum primary pressure rating.

CAUTION:
REGULATOR PRESSURE ADJUSTMENT –
The working range of knob adjustment is designed to permit outlet pressures within their full range. Pressure adjustment beyond this range is also possible because the knob is not a limiting device. This is a common characteristic of most industrial regulators, and limiting devices may be obtained only by special design. For best performance, regulated pressure should always be set by increasing the pressure up to the desired setting.

☐ Most popular.

Parker Hannifin Corporation
Pneumatic Division
Richland, Michigan
www.parker.com/pneumatics

14E

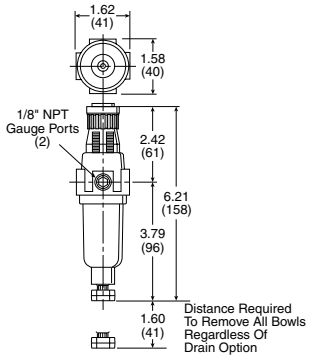

B34

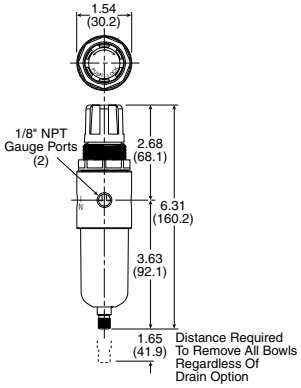

Material specifications

Description			14E (Mini)	B34
Adjusting nut			Brass	
Adjusting stem & spring			Steel	
Body			Zinc	Aluminum
Bonnet, knob, seat, piston, holder & deflector			Plastic	
Bowls		Transparent	Polycarbonate	Polycarbonate
		Metal	Zinc	Zinc
Drains	Manual – twist	Body & stem	Plastic	
		Seals	Nitrile	
	Automatic – pulse	Piston & seals	Nitrile	
		Stem, seat, adapter & washers	Aluminum	
Elastomers				Buna N
Filter elements		5 Micron (standard)	Plastic	Sintered polyethylene
		40 Micron (optional)	Plastic	
		Adsorber (optional)	Activated charcoal	
Filter retainer, vane plate				Acetal
Innervalve, diaphragm, button, drain				Brass
Seals			Nitrile	

Service kits

Adjusting knob				**RRP-16-005-000**
Bonnet tamperproof kit			**P01265**	
Bowl kits	Poly bowl –	Automatic pulse drain	**PS408BP**	**BK504SY**
		Twist drain	**PS404P**	**BK504Y**
	Metal bowl –	Automatic drain	**PS451BP**	**BK505SY**
		Twist drain	**PS447BP**	**BK505Y**
Drain kits		Automatic pulse drain		**RK504SY**
Filter element kits –		5 Micron	**PS403P**	**FRP-96-729**
		40 Micron	**PS401P**	
		Adsorber	**PS452P**	
Gauges –		30 PSIG (0 to 2.1 bar)	**K4515N18030**	
		60 PSIG (0 to 4.1 bar)	**K4515N18060**	**K4515N18060**
		160 PSIG (0 to 11.0 bar)	**K4515N18160**	**K4515N18160**
Mounting bracket kit* (includes panel mount nut)			**PS417BP**	**SA161X57**
Panel mount nuts –		Plastic	**P78652**	**R05X51-P**
		Aluminum		**R05X51-A**
Poppet / piston kits –		Unbalanced, non-relieving	**PS428P**	
		Unbalanced, relieving	**PS426P**	
Repair kits –		Non-relieving, diaphragm, valve assembly		**GRP-96-726**
		Relieving, diaphragm, valve assembly		**GRP-96-725**
Springs –		15 PSIG	**P01176** (yellow)	**GRP-95-111**
		30 PSIG	**P01175** (black)	
		60 PSIG	**P01174** (white)	**GRP-96-718 (black)**
		125 PSIG	**P01173** (gold)	**GRP-96-717**

☐ Most popular.

Parker Hannifin Corporation
Pneumatic Division
Richland, Michigan
www.parker.com/pneumatics