- Excellent water removal efficiency
- 5 micron element standard on 14F
- Integral 1/8", 1/4" ports (NPT, BSPP & BSPT)



Material specifications

Description		14F (Mini)
Body		Zinc
Bowl		Polycarbonate
Deflector, element holder, baffle		Plastic
Drains – Twist	Body & stem	Plastic
	Seals	Nitrile
Drains – Auto pulse	Piston & seals	Nitrile
	Stem, seat, adapter & washers	Aluminum
Filter element –	5 micron (Standard)	Plastic
	40 micron (Optional)	Plastic
	Adsorber (Optional)	Activated charcoal
Seals		Nitrile

Operating information

		14F
Operating pressure:	Poly bowl Metal bowl	0 to 150 PSIG (0 to 10.3 bar) 0 to 250 PSIG (0 to 17.2 bar)
	Auto pulse drain	10 to 250 PSIG (0.7 to 17.2 bar)
Operating temperature:	Poly bowl Metal bowl Auto pulse drain	32°F to 125°F (0°C to 52°C) 32°F to 175°F (0°C to 80°C) 125°F (52°C) or less

For technical information see CD

14F

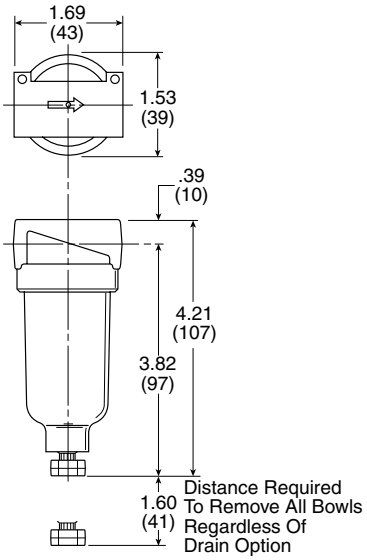

Service kits

Description			14F (Mini)
Bowl Kits	Poly bowl –	Auto pulse drain	**PS408BP**
		Twist drain	**PS404P**
	Metal bowl –	Auto drain	**PS451BP**
		Twist drain	**PS447BP**
Filter element kit –		40 micron	**PS401P**
		5 micron	**PS403P**
		Adsorber	**PS452P**
Mounting bracket kit			**PS417BP**

14F Particulate Filters

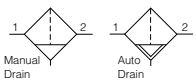

		Port size	Bowl type	Sight gauge	Flow SCFM	Part number (NPT)	
						Twist drain	Automatic pulse drain
14F		1/8"	Poly	No	22	**14F01BB**	**14F05BB**
		1/8"	Metal	No	22	**14F03BB**	**14F07BB**
		1/4"	Poly	No	24	**14F11BB**	**14F15BB**
		1/4"	Metal	No	24	**14F13BB**	**14F17BB**

* Engineering level will be added at factory.

Most popular.

Parker Hannifin Corporation
Pneumatic Division
Richland, Michigan
www.parker.com/pneumatics