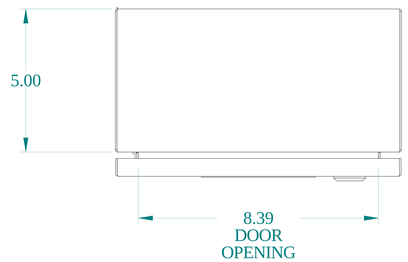


TOP VIEW

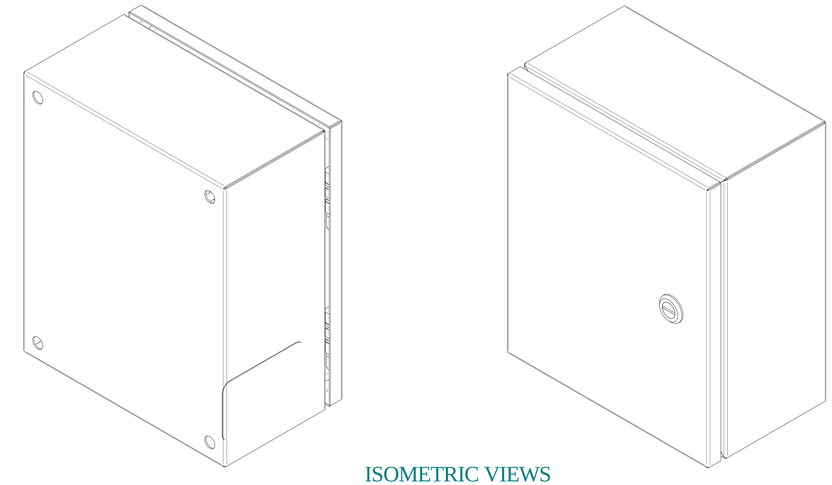

ISOMETRIC VIEWS

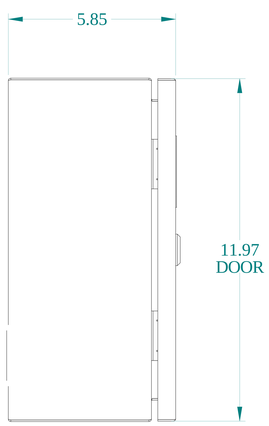


SIDE VIEW

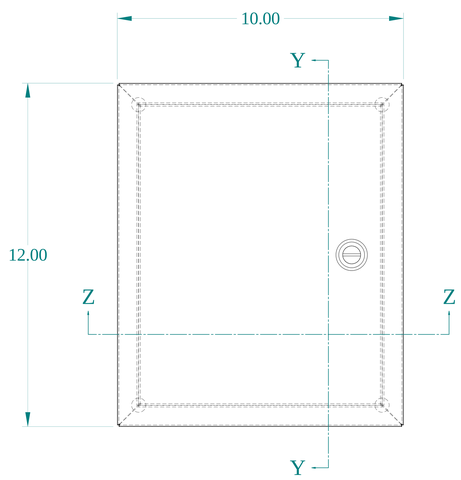


FRONT VIEW

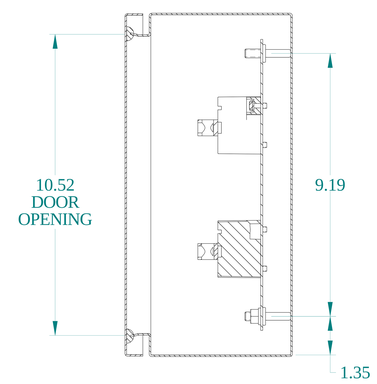


SECTION Y-Y

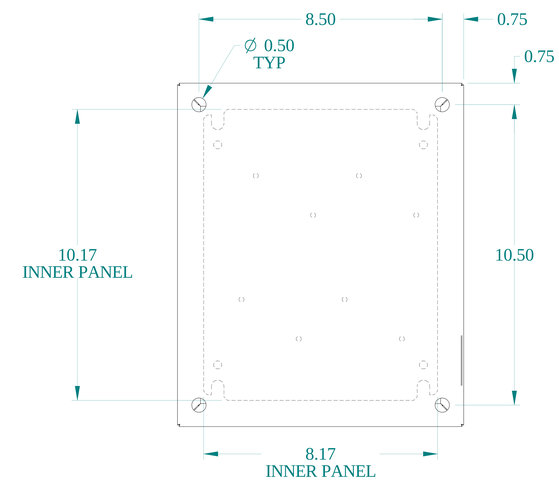


BACK VIEW

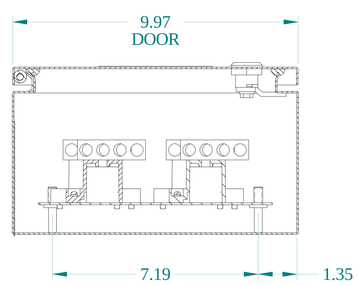


SECTION Z-Z

HAMMOND MANUFACTURING®

www.hammondmfg.com

Data subject to change without notice.

| | |
|---|---|
| Part # : CN4SB74SS | Date : Apr. 19, 2021 |

Link:www.hammfg.com/CN4SB74SS