Instruction Manual
HMV..E Hydraulic Nut
Use with H, & OH Series Adapters or AH Withdrawal Sleeves

Installation

Warning: *The HMV..E Hydraulic Nut is an installation tool designed to assist with bearing mounting on a tapered adapter sleeve or withdrawal sleeve. After the bearing has been tightened, the HMV..E Hydraulic Nut must be replaced with the standard nut supplied with the adapter.*

Tools Required: Feeler gauges, portable hydraulic pump, dial indicator to monitor axial drive up.

Note: Follow the standard installation instructions provided with the bearing and/or split block assembly to position the seals, bearing and adapter loosely on the shaft as close as possible to the final desired installed position. Using feeler gauges, and the steps suggested in the standard instructions, measure and verify the unmounted internal clearance of the bearing and record this measurement. Verify this internal clearance for the bearing in the chart(s) in the standard manual. From these charts, identify the final mounted clearance recommended for the bearing. The bearing must be tightened until this final internal clearance level is reached. Record the final mounted clearance as well and keep with installation details.



Fig. 1

1. Use HMV..E Hydraulic Nut (Fig. 1) to snug the bearing into position on the adapter. A bar spanner (Fig. 2) supplied with the HMV..E Nut can be used to hand tighten the hydraulic nut against the bearing. Place the spanner into the shallow hole shown in Fig 1 to tighten the nut. Once the nut is snug, connect the hydraulic pump to the nut as shown in Fig 3. An axial indicator access is also provided when measuring or tracking axial displacement is needed. **Important: measure and document the internal clearance of the bearing during the mounting process.** Axial movement should only be used as a guide since the starting point is difficult to determine repeatedly. Chart 1 indicates the approximate axial movement to help determine the final position of the bearing. Use the axial movement only as a guide.



Fig. 2

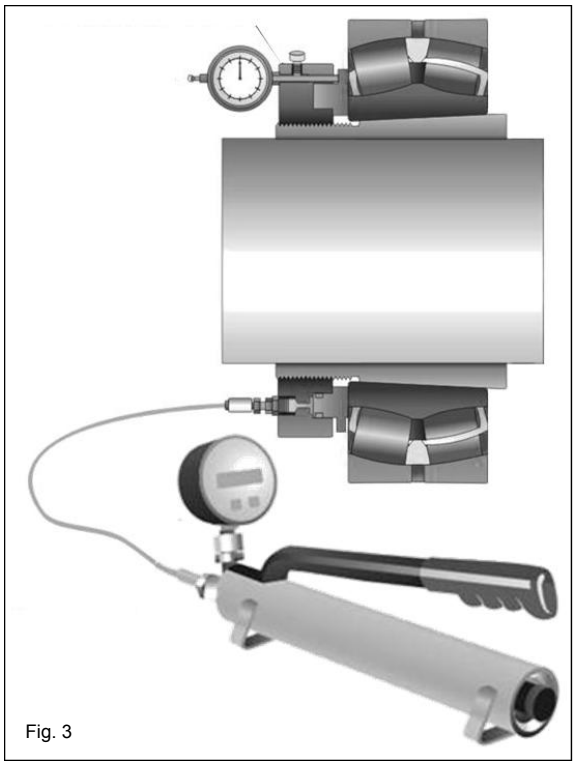

Fig. 3

2. Continue to increase pressure to the hydraulic nut and measure the internal clearance frequently until the final recommended internal clearance is reached in the bearing. The pressure listed in the chart should also only be used as a guide. (The pressure to mount will vary between spherical roller bearing brands due to slight geometric and wall thickness differences.)

3. Once the final clearance is reached, release the pressure and remove the hydraulic nut. Install the lock washer and nut. The tapered side of the washer fits against the beveled side of the nut. Tighten the nut against the bearing and bend the nearest tab of the washer into slot on the OD of the nut. See Fig 4. **Note:** ***If a Locking Clip is used instead of a Lock Washer (Size 44 and larger), locate the nearest locking slot so the clip fits into the notch in the adapter sleeve. This secures the Locking Clip.***

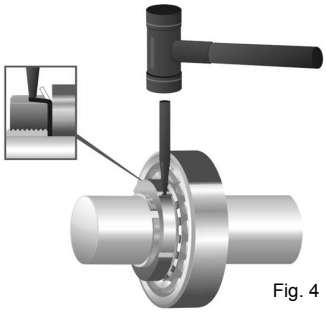

Fig. 4

4. Refer back to the Split Block Installation Manual to finish installing the seals, fixing rings, housing and for required lubrication.

ISO-9001:2008 Certified

P.T. International Corp.
1817 Westinghouse Blvd.
P.O. Box 411244 (28241)
Charlotte, NC 28273
Ph: 704-588-1091
Fax: 704-588-5738
www.ptintl.com
E-mail: info@ptintl.com

Warning: Because of the possible danger to person(s) or property from accidents which may result from the improper use of products. it is important that correct procedures be followed. Products must be in accordance with the engineering information specified in the catalog. Proper installation, maintenance and operation procedures must be observed. All instructions in the instruction manuals must be followed. Inspections should be made as necessary to assure safe operation under prevailing conditions. Proper guards and other suitable safety devices or procedures as may be desirable or as may be specified in safety codes should be provided, and are neither provided by P.T. International, nor are the responsibility of P.T. International. This unit and associated equipment in the system must be installed, adjusted and maintained by qualified personnel who are familiar with the construction and operation of all equipment in the system and the potential hazards involved. When risk to persons or property may be invoked, a holding device must be an integral part of the driven equipment beyond the speed reducer output shaft.

Chart 1 - Hydraulic Pressure & Axial Drive-Up Guidelines

222 Series Bearing	Hyd. Pressure*	Radial Clearance Reduction	Axial Drive-Up*
	psi	in	in
22210 K C3	100	0.0009	0.0136
22211 K C3	110	0.0010	0.0145
22212 K C3	140	0.0011	0.0156
22213 K C3	160	0.0012	0.0170
22214 K C3	150	0.0012	0.0178
22215 K C3	140	0.0013	0.0186
22216 K C3	150	0.0014	0.0195
22217 K C3	160	0.0015	0.0206
22218 K C3	190	0.0016	0.0217
22219 K C3	200	0.0017	0.0225
22220 K C3	230	0.0018	0.0236
22222 K C3	270	0.0019	0.0258
22224 K C3	280	0.0021	0.0275
22226 K C3	300	0.0023	0.0295
22228 K C3	340	0.0025	0.0317
22230 K C3	360	0.0027	0.0336
22232 K C3	370	0.0028	0.0358
22234 K C3	400	0.0030	0.0381
22236 K C3	360	0.0032	0.0397
22238 K C3	370	0.0034	0.0417
22240 K C3	390	0.0035	0.0439
22244 K C3	420	0.0039	0.0481
22248 K C3	470	0.0043	0.0528
22252 K C3	470	0.0046	0.0564
22256 K C3	420	0.0050	0.0600
22260 K C3	420	0.0053	0.0636
22264 K C3	440	0.0057	0.0681

Pressures are for an HMV(C) E Series nuts
Nut size = Bearing size

* Values for hydraulic pressure and axial drive-up are provided as a guide. Actual pressures may vary due to bearing brand. Drive-Up may also vary depending on start position. Measure the internal clearance in the bearing to verify accurate mounting.

223 Series Bearing	Hyd. Pressure*	Radial Clearance Reduction	Axial Drive-Up*
	psi	in	in
22310 K C3	250	0.0069	0.0142
22311 K C3	270	0.0010	0.0153
22312 K C3	290	0.0011	0.0161
22313 K C3	310	0.0012	0.0175
22314 K C3	330	0.0012	0.0183
22315 K C3	360	0.0013	0.0195
22316 K C3	370	0.0014	0.0206
22317 K C3	400	0.0015	0.0217
22318 K C3	410	0.0016	0.0225
22319 K C3	430	0.0017	0.0236
22320 K C3	500	0.0018	0.0250
22322 K C3	580	0.0019	0.0272
22324 K C3	630	0.0021	0.0295
22326 K C3	680	0.0023	0.0314
22328 K C3	730	0.0025	0.0333
22330 K C3	760	0.0027	0.0356
22332 K C3	740	0.0028	0.0378
22334 CKK	760	0.0030	0.0400
22336 K C3	740	0.0032	0.0420
22338 K C3	730	0.0034	0.0439
22340 K C3	740	0.0035	0.0461
22344 K C3	810	0.0039	0.0511
22348 K C3	800	0.0043	0.0553
22352 K C3	810	0.0046	0.0595
22356 K C3	820	0.0050	0.0636

231 Series Bearing	Hydraulic Pressure*	Radial Clearance Reduction	Axial Drive-Up*
	psi	in	in
23120 K C3	200	0.0018	0.0231
23122 K C3	210	0.0019	0.0247
23124 K C3	250	0.0021	0.0270
23126 K C3	230	0.0023	0.0286
23128 K C3	240	0.0025	0.0306
23130 K C3	320	0.0027	0.0328
23132 K C3	320	0.0028	0.0350
23134 K C3	310	0.0030	0.0367
23136 K C3	330	0.0032	0.0386
23138 K C3	360	0.0034	0.0409
23140 K C3	370	0.0035	0.0431
23144 K C3	390	0.0039	0.0470
23148 K C3	380	0.0043	0.0506
23152 K C3	410	0.0046	0.0547
23156 K C3	370	0.0050	0.0581
23160 K C3	400	0.0053	0.0623
23164 K C3	450	0.0057	0.0667
23168 K C3	490	0.0060	0.0709
23172 K C3	470	0.0064	0.0748
23176 K C3	410	0.0067	0.0775

230 Series Bearing	Hyd. Pressure*	Radial Clearance Reduction	Axial Drive-Up*
	psi	in	in
23022 K C3	150	0.0019	0.0247
23024 K C3	150	0.0021	0.0264
23026 K C3	180	0.0023	0.0283
23028 K C3	170	0.0025	0.0303
23030 K C3	180	0.0027	0.0320
23032 K C3	180	0.0028	0.0339
23034 K C3	190	0.0030	0.0358
23036 K C3	210	0.0032	0.0381
23038 K C3	210	0.0034	0.0400
23040 K C3	230	0.0035	0.0422
23044 K C3	240	0.0039	0.0459
23048 K C3	210	0.0043	0.0495
23052 K C3	250	0.0046	0.0536
23056K C3	220	0.0050	0.0570
23060 K C3	250	0.0053	0.0611
23064 K C3	230	0.0057	0.0645
23068 K C3	260	0.0060	0.0689
23072 K C3	230	0.0064	0.0720
23076 K C3	230	0.0067	0.0756

232 Series Bearing	Hydraulic Pressure*	Radial Clearance Reduction	Axial Drive-Up*
	psi	in	in
23218 K C3	240	0.0016	0.0214
23220 K C3	280	0.0018	0.0233
23222 K C3	340	0.0019	0.0256
23224 K C3	360	0.0021	0.0275
23226 K C3	370	0.0023	0.0295
23228 K C3	440	0.0025	0.0317
23230 K C3	450	0.0027	0.0336
23232 K C3	470	0.0028	0.0358
23234 K C3	490	0.0030	0.0378
23236 K C3	460	0.0032	0.0395
23238 K C3	470	0.0034	0.0417
23240 K C3	500	0.0035	0.0439
23244 K C3	540	0.0039	0.0481
23248 K C3	620	0.0043	0.0525
23252 K C3	660	0.0046	0.0570
23256 K C3	600	0.0050	0.0603
23260 K C3	630	0.0053	0.0645
23264 K C3	670	0.0057	0.0689
23268 K C3	720	0.0060	0.0731
23272 K C3	670	0.0064	0.0767
23276 K C3	680	0.0067	0.0806

P.T. International Corp.