TECHNICAL DRAWINGS ARE APPROXIMATE ACTUAL SIZE

ADAPTERS

FEMALE x FEMALE

Female-to-female adapters are often used to join two pipes, creating extended pipe lengths. The H85425 is often used to extend grease gun pipes.

H85425

Straight Adapter
Female (X) - 1/8"-27 NPTF
Female (Y) - 1/8"-27 NPTF

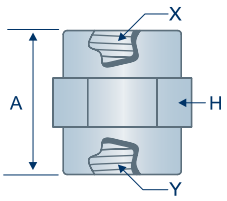

H85400

Straight Adapter
Female (X) - 1/4"-18 NPTF
Female (Y) - 1/4"-18 NPTF

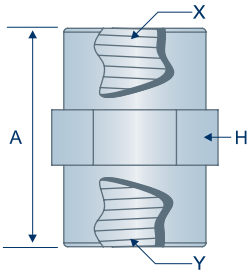

HFEM01

Straight Adapter
Female (X) - 1/4"-28 UNF
Female (Y) - 1/8"-27 NPTF

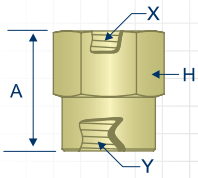

Item #	Female Thread (Y)	Female Thread (X)	Angle (E)	Overall Length (A)	Hex (H)
H85425	1/8"-27 NPTF (F)	1/8"-27 NPTF (F)	Straight	.75"	5/8"
H85400	1/4"-18 NPTF (F)	1/4"-18 NPTF (F)	Straight	1.14"	3/4"
HFEM01	1/8"-27 NPTF (F)	1/4"-28 UNF (F)	Straight	.65"	1/2"

ADAPTERS

MALE x MALE

H14727

Straight Adapter
Male (X) - 1/4"-18 NPTF
Male (Y) - 3/4"-14 NPTF

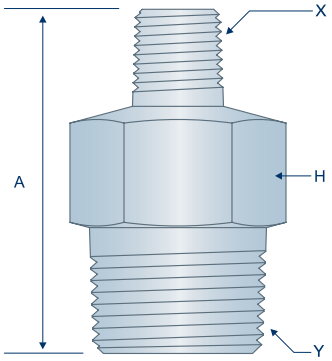

L 14727

H47703

Straight Adapter
Male (X) - 7/16"-27 UNS
Male (Y) - 1/2"-27 NS Taper

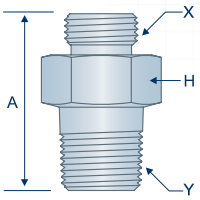

A 47703

Item #	Male Thread (Y)	Male Thread (X)	Angle (E)	Overall Length (A)	Hex (H)
H14727	3/4"-14 NPTF (M)	1/4"-18 NPTF (M)	Straight	2.07"	1-1/8"
H47703	1/2"-27 NS Taper (M)	7/16"-27 UNS (M)	Straight	1.06"	5/8"

All manufacturer names and numbers are for cross reference identification purposes only. In no way are we implying that our parts were made by the manufacturers listed.
Prices, materials, dimensions, tolerances, designs and grades subject to change without notice. © G.L. Huyett 2019