HUYETT.COM • 785-392-3017
BOX 232 • MINNEAPOLIS, KS • 67467
SALES@HUYETT.COM • FAX 785-392-2845

SPLIT – METRIC

DESCRIPTION

Split collars provide greater clamping force than set collars by squeezing the shaft rather than penetrating it with a set screw. Double-split collars provide more clamping force than single-split collars and have the added feature of being able to be installed radially and clamp from both sides.

HOW TO IDENTIFY

1. Verify single- or double-split style.
2. Measure bore (A).
3. Build the part number from the chart on the next page.

SINGLE-SPLIT

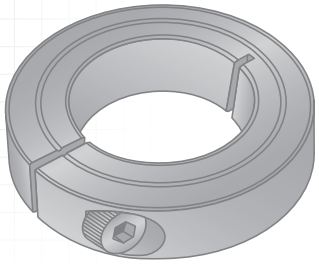

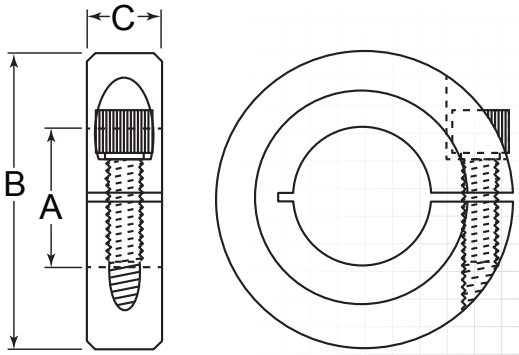

PREFIX		MATERIAL/FINISH
SCM1-###	=	CARBON STEEL, PLAIN*
SCM1-###-AL	=	ALUMINUM, PLAIN
SCM1-###-BO	=	CARBON STEEL, BLACK OXIDE
SCM1-###-SS	=	STAINLESS STEEL, PLAIN

DOUBLE-SPLIT

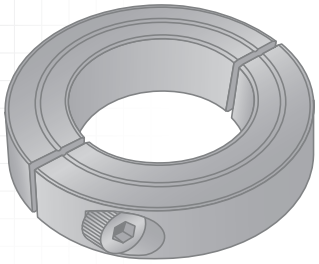

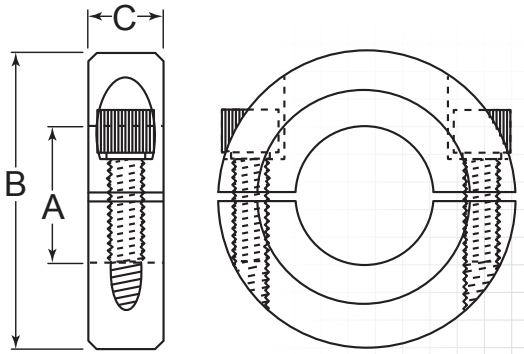

PREFIX		MATERIAL/FINISH
SCM2-###	=	CARBON STEEL, PLAIN*
SCM2-###-AL	=	ALUMINUM, PLAIN
SCM2-###-BO	=	CARBON STEEL, BLACK OXIDE
SCM2-###-SS	=	STAINLESS STEEL, PLAIN
SCM2-###-ZC	=	CARBON STEEL, ZINC CLEAR

BORE (A) TOLERANCES

(Size Range)	*(Tolerance)*
Single-split & Double-split	
3 mm – 5 mm	+0.01/+0.080 mm
6 mm – 24 mm	+0.02/+0.012 mm
25 mm – 75 mm	+0.02/+0.150 mm
80 mm – 100 mm	+0.02/+0.200 mm

APPLICATION

USE DOUBLE-SPLIT COLLARS WHERE COMPONENTS WILL NOT ALLOW AXIAL INSTALLATION

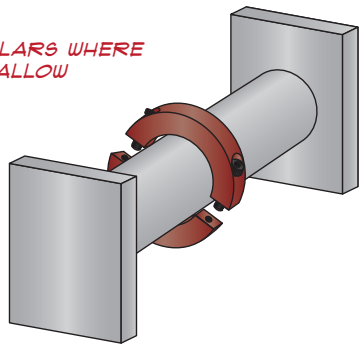

FOR DETAILED SPECIFICATIONS AND TOLERANCES, VISIT HUYETT.COM.

Prices, materials, dimensions, tolerances, designs, and grades subject to change without notice. © 2016 G.L. Huyett
**Limited warranty for surface finish: 30 days from date of shipment. See page 12 for details.*

SPLIT – METRIC

ZINC PLATING AND OTHER FINISHES AVAILABLE FOR ALL PARTS

SEE PAGE 16

HOW TO BUILD A PART NUMBER

SCM2-Ø12-SS

LEAVE BLANK FOR CARBON STEEL, PLAIN*

OR SELECT MATERIAL AND FINISH FROM THE LIST BELOW

ITEM PREFIX

SCM2-

TO ORDER CHOOSE YOUR STYLE,

CODE	STYLE
SCM1-	Single-split Collar, Metric
SCM2-	Double-split Collar, Metric

DON'T SEE WHAT YOU'RE LOOKING FOR? CONTACT SALES@HUYETT.COM OR CALL 785-392-3017

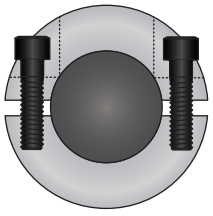

Single- and double-split shaft collars can be installed on shafts with diameters of 0.381 mm (.015") less than the nominal bore sizes listed here.

(A) BORE

3 mm to 100 mm

Ø12

CHOOSE YOUR BORE,

CODE	BORE
003	3.00 mm
004	4.00 mm
005	5.00 mm
006	6.00 mm
007	7.00 mm
008	8.00 mm
009	9.00 mm
010	10.00 mm
011	11.00 mm
012	12.00 mm
013	13.00 mm
014	14.00 mm
015	15.00 mm
016	16.00 mm
017	17.00 mm
018	18.00 mm
019	19.00 mm
020	20.00 mm
021	21.00 mm
022	22.00 mm
023	23.00 mm
024	24.00 mm
025	25.00 mm
026	26.00 mm

CODE	BORE
028	28.00 mm
030	30.00 mm
032	32.00 mm
034	34.00 mm
035	35.00 mm
036	36.00 mm
038	38.00 mm
040	40.00 mm
042	42.00 mm
045	45.00 mm
048	48.00 mm
050	50.00 mm
054	54.00 mm
055	55.00 mm
060	60.00 mm
065	65.00 mm
070	70.00 mm
075	75.00 mm
080	80.00 mm
085	85.00 mm
090	90.00 mm
095	95.00 mm
100	100.00 mm

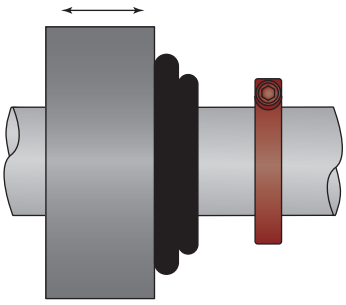

USED AS AN ADJUSTABLE STROKE LIMITER IN MECHANICAL APPLICATIONS

MATERIAL SUFFIX

-SS

CHOOSE YOUR MATERIAL.

CODE	MATERIAL/FINISH
(blank)	Carbon Steel, Plain*
-AL	Aluminum, Plain
-BO	Carbon Steel, Black Oxide
-SS	Stainless Steel, Plain
-ZC	Carbon Steel, Zinc Clear

HOLDING POWER

The small slit, called a relief cut, opposite the cap screw reduces the amount of force required to bend the collar. This allows the cap screw to transfer more clamping force through the collar to the shaft.

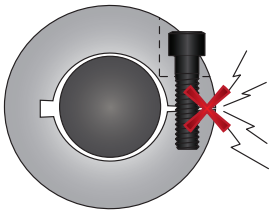

When tightened, the edges of the split should not touch. If the split is completely closed the collar is too large and will not securely clamp on the shaft.

FOR DETAILED SPECIFICATIONS AND TOLERANCES, VISIT HUYETT.COM.

Prices, materials, dimensions, tolerances, designs, and grades subject to change without notice. © 2016 G.L. Huyett

**Limited warranty for surface finish: 30 days from date of shipment. See page 12 for details.*