ADAPTERS

MALE x FEMALE

Adapters are often implemented in applications where a thread size needs to be changed to accompany a mating part. This is generally done to accommodate common thread sizes, retrofit aftermarket parts to an existing assembly or allow for the tapping of larger threads to replace a damaged part.

HA51942 *

Straight Adapter
Female (X) - 1/8"-27 NPTF
Male (Y) - 1/4"-28 SAE-LT

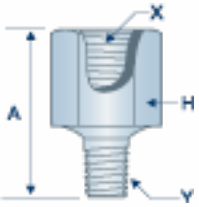

Alemite 51942
Lincoln 20024

H51942 *

Straight Adapter
Female (X) - 1/8"-27 NPTF
Male (Y) - 1/4"-28 SAE-LT

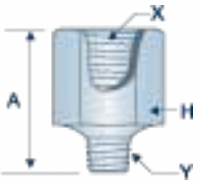

H305859

Straight Adapter
Female (X) - 1/8"-27 NPTF
Male (Y) - 7/16"-27 UNS

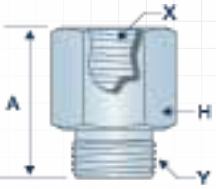

Alemite 305859

H43760

Straight Adapter
Female (X) - 1/4"-18 NPTF
Male (Y) - 1/8"-27 NPTF

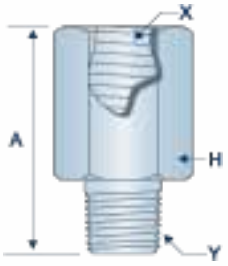

Alemite 43760
Lincoln 11229

H301198

Straight Adapter
Female (X) - 3/8"-18 NPTF
Male (Y) - 1/4"-18 NPTF

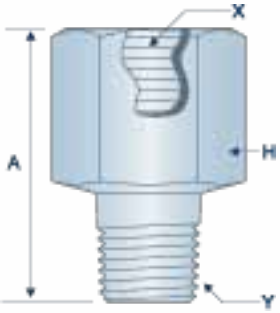

Alemite 301198
Lincoln 10049

H12989

Straight Adapter
Female (X) - 1/2"-14 NPTF
Male (Y) - 1/4"-18 NPTF

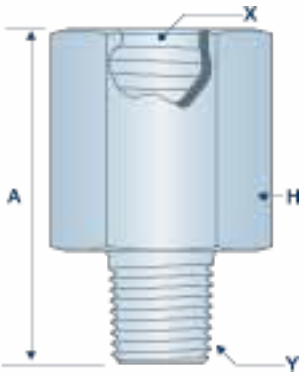

Lincoln 12989

ITEM #	MALE THREAD (Y)	FEMALE THREAD (X)	ANGLE (E)	OVERALL LENGTH (A)	HEX (H)
HA51942 *	1/4"-28 SAE-LT (M)	1/8"-27 NPTF (F)	STRAIGHT	.87"	1/2"
H51942 *	1/4"-28 SAE-LT (M)	1/8"-27 NPTF (F)	STRAIGHT	.75"	1/2"
H305859	7/16"-27 UNS (M)	1/8"-27 NPTF (F)	STRAIGHT	.78"	9/16"
H43760	1/8"-27 NPTF (M)	1/4"-18 NPTF (F)	STRAIGHT	1.19"	5/8"
H301198	1/4"-18 NPTF (M)	3/8"-18 NPTF (F)	STRAIGHT	1.44"	7/8"
H12989	1/4"-18 NPTF (M)	1/2"-14 NPTF (F)	STRAIGHT	1.75"	1"

* Common Parts
Parts with this designation are in wide distribution.

Alemite® is a registered trademark of Alemite, LLC, Johnson City, TN, USA.

Lincoln Industrial® Lincoln Industrial® is a registered trademark of Lincoln Industrial (USA) Corp.

John Deere® John Deere® is a registered trademark of Deere and Company, Moline, Illinois.

All manufacturer names and numbers are for cross reference identification purposes only. In no way are we implying that our parts were made by the manufacturers listed.
Prices, materials, dimensions, tolerances, designs and grades subject to change without notice. © G.L. Huyett 2011

REVISED 06-11

TECHNICAL DRAWINGS ARE APPROXIMATE ACTUAL SIZE