EXTERNAL – 2-TURN MEDIUM-HEAVY DUTY

RST

DESCRIPTION

These 2-turn and multi-turn rings provide 360° groove contact and are designed for applications with medium-high thrust loads. Externally fitted up to 10" shaft diameter, these rings can handle all but the most rigorous applications. *See page 221 for thrust load comparisons.*

HOW TO IDENTIFY

1. Verify multi-turn design and appearance.
2. Measure the shaft diameter (Ds).
3. Measure the ring free inside diameter (Df).
4. Measure the thickness (T).
5. Measure the radial wall (S).
6. Find the part in the chart.

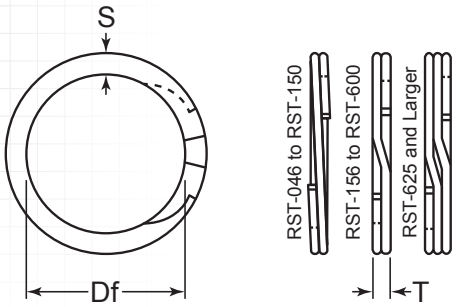

Ring Dimensions

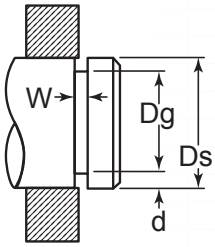

Groove Dimensions

Item #	Shaft Diameter	Groove Size					Ring Size & Weight						Thrust Load	
		Diameter		Width		Depth	Free Diameter		Thickness		Section		Ring Safety Factor of 3	Groove Safety Factor of 2
	Ds	Dg	Tol.	W	Tol.	d	Df	Tol.	T	Tol.	S	Tol.		
RST-046	.469"	.443"	±.002"	.029"		.013"	.436"		.025"	±.002"	.045"	±.004"	1,800	430
RST-050	.500"	.474"	±.002"	.039"		.013"	.469"		.035"	±.002"	.045"	±.004"	2,530	460
RST-055	.551"	.524"	±.003"	.039"		.014"	.518"		.035"	±.002"	.045"	±.004"	2,790	550
RST-056	.562"	.535"	±.003"	.039"		.014"	.529"		.035"	±.002"	.045"	±.004"	2,840	560
RST-059	.594"	.565"	±.003"	.039"		.015"	.559"		.035"	±.002"	.045"	±.004"	3,000	630
RST-062	.625"	.596"	±.003"	.039"		.015"	.590"		.035"	±.002"	.055"	±.004"	3,160	660
RST-066	.669"	.638"	±.003"	.039"		.016"	.630"		.035"	±.002"	.055"	±.004"	3,380	760
RST-068	.688"	.655"	±.003"	.046"	+.003/	.017"	.648"	+.000/	.042"	±.002"	.065"	±.004"	4,180	830
RST-075	.750"	.715"	±.003"	.046"	-.000"	.018"	.708"	-.013"	.042"	±.002"	.065"	±.004"	4,550	950
RST-078	.781"	.745"	±.003"	.046"		.018"	.738"		.042"	±.002"	.065"	±.004"	4,740	990
RST-081	.812"	.776"	±.003"	.046"		.018"	.768"		.042"	±.002"	.065"	±.004"	4,930	1,030
RST-087	.875"	.835"	±.003"	.046"		.020"	.827"		.042"	±.002"	.075"	±.004"	5,310	1,240
RST-093	.938"	.894"	±.003"	.046"		.022"	.886"		.042"	±.002"	.075"	±.004"	5,690	1,460
RST-098	.984"	.940"	±.003"	.046"		.022"	.934"		.042"	±.002"	.075"	±.004"	5,970	1,530
RST-100	1.000"	.955"	±.003"	.046"		.023"	.947"		.042"	±.002"	.075"	±.004"	6,070	1,630
RST-102	1.023"	.977"	±.004"	.046"		.023"	.969"		.042"	±.002"	.075"	±.004"	6,210	1,660
RST-106	1.062"	1.015"	±.004"	.056"		.024"	1.005"		.050"	±.002"	.088"	±.004"	7,010	1,800
RST-112	1.125"	1.075"	±.004"	.056"		.025"	1.064"		.050"	±.002"	.088"	±.004"	7,420	1,990
RST-118	1.188"	1.135"	±.004"	.056"		.027"	1.126"		.050"	±.002"	.088"	±.004"	7,370	2,270
RST-125	1.250"	1.195"	±.004"	.056"	+.004/	.028"	1.184"	+.000/	.050"	±.002"	.093"	±.004"	8,250	2,470
RST-131	1.312"	1.250"	±.004"	.056"	-.000"	.031"	1.240"	-.015"	.050"	±.002"	.098"	±.004"	8,660	2,880
RST-137	1.375"	1.310"	±.004"	.056"		.033"	1.298"		.050"	±.002"	.103"	±.004"	9,070	3,210
RST-143	1.438"	1.370"	±.004"	.056"		.034"	1.359"		.050"	±.002"	.103"	±.004"	9,490	3,460
RST-150	1.500"	1.430"	±.004"	.056"		.035"	1.419"		.050"	±.002"	.103"	±.004"	9,900	3,710

Prices, materials, dimensions, tolerances, designs, and grades subject to change without notice. © 2017 G.L. Huyett

EXTERNAL – 2-TURN MEDIUM-HEAVY DUTY

MATERIAL & HARDNESS

MATERIAL: CARBON SPRING STEEL

RST

Item #	Shaft Diameter	Groove Size					Ring Size & Weight						Thrust Load	
		Diameter		Width		Depth	Free Diameter		Thickness		Section		Ring Safety Factor of 3	Groove Safety Factor of 2
	Ds	Dg	Tol.	W	Tol.	d	Df	Tol.	T	Tol.	S	Tol.		
RST-156	1.562"	1.490"	±.005"	.068"	+.004/ -.000"	.036"	1.476"	+.000/ -.020"	.062"	±.003"	.108"	±.004"	12,780	3,980
RST-162	1.625"	1.550"	±.005"	.068"		.038"	1.537"		.062"	±.003"	.118"	±.004"	13,290	4,370
RST-168	1.687"	1.610"	±.005"	.068"		.039"	1.598"		.062"	±.003"	.118"	±.004"	13,800	4,650
RST-175	1.75"	1.670"	±.005"	.068"		.040"	1.657"		.062"	±.003"	.118"	±.004"	14,320	4,950
RST-177	1.771"	1.689"	±.005"	.068"		.041"	1.676"		.062"	±.003"	.123"	±.004"	14,490	5,130
RST-181	1.812"	1.730"	±.005"	.068"		.041"	1.714"		.062"	±.003"	.123"	±.004"	14,820	5,250
RST-187	1.875"	1.790"	±.005"	.068"		.043"	1.774"		.062"	±.003"	.123"	±.004"	15,340	5,700
RST-196	1.969"	1.879"	±.005"	.068"		.045"	1.864"		.062"	±.003"	.123"	±.004"	16,110	6,260
RST-200	2.000"	1.910"	±.005"	.068"		.045"	1.894"	+.000/ -.025"	.062"	±.003"	.128"	±.004"	16,360	6,360
RST-206	2.062"	1.970"	±.006"	.086"	+.005/ -.000"	.046"	1.955"		.078"	±.003"	.141"	±.004"	21,220	6,710
RST-212	2.125"	2.027"	±.006"	.086"		.049"	2.012"		.078"	±.003"	.141"	±.004"	21,870	7,360
RST-215	2.156"	2.057"	±.006"	.086"		.050"	2.041"		.078"	±.003"	.141"	±.004"	22,190	7,620
RST-225	2.250"	2.145"	±.006"	.086"		.053"	2.129"		.078"	±.003"	.141"	±.004"	23,160	8,430
RST-231	2.312"	2.205"	±.006"	.086"		.054"	2.188"		.078"	±.003"	.141"	±.004"	23,800	8,830
RST-237	2.375"	2.265"	±.006"	.086"		.055"	2.248"		.078"	±.003"	.141"	±.004"	24,440	9,230
RST-243	2.437"	2.325"	±.006"	.086"		.056"	2.307"		.078"	±.003"	.141"	±.004"	25,080	9,650
RST-250	2.500"	2.385"	±.006"	.086"		.058"	2.366"		.078"	±.003"	.188"	±.005"	25,730	10,250
RST-255	2.559"	2.443"	±.006"	.086"		.058"	2.424"		.078"	±.003"	.188"	±.005"	26,340	10,490
RST-262	2.625"	2.505"	±.006"	.086"		.060"	2.485"		.078"	±.003"	.188"	±.005"	27,020	11,130
RST-268	2.687"	2.565"	±.006"	.086"		.061"	2.545"		.078"	±.003"	.188"	±.005"	27,660	11,590
RST-275	2.750"	2.625"	±.006"	.103"		.063"	2.604"	+.000/ -.030"	.093"	±.003"	.188"	±.005"	32,140	12,250
RST-287	2.875"	2.742"	±.006"	.103"		.067"	2.722"		.093"	±.003"	.188"	±.005"	33,600	13,620
RST-293	2.937"	2.801"	±.006"	.103"		.068"	2.780"		.093"	±.003"	.188"	±.005"	34,320	14,120
RST-300	3.000"	2.860"	±.006"	.103"		.070"	2.838"		.093"	±.003"	.188"	±.005"	35,060	14,840
RST-306	3.062"	2.920"	±.006"	.103"		.071"	2.897"		.093"	±.003"	.188"	±.005"	35,790	15,370
RST-312	3.125"	2.980"	±.006"	.103"		.073"	2.957"		.093"	±.003"	.188"	±.005"	36,520	16,130
RST-315	3.156"	3.010"	±.006"	.103"		.073"	2.986"		.093"	±.003"	.188"	±.005"	36,880	16,290
RST-325	3.250"	3.100"	±.006"	.103"		.075"	3.075"		.093"	±.003"	.188"	±.005"	37,980	17,230
RST-334	3.344"	3.190"	±.006"	.103"		.077"	3.164"		.093"	±.003"	.188"	±.005"	39,080	18,200
RST-343	3.437"	3.280"	±.006"	.103"		.079"	3.254"		.093"	±.003"	.188"	±.005"	40,170	19,190
RST-350	3.500"	3.340"	±.006"	.120"		.080"	3.315"	+.000/ -.040"	.111"	±.003"	.250"	±.005"	48,820	19,790
RST-354	3.543"	3.381"	±.006"	.120"		.081"	3.356"		.111"	±.003"	.250"	±.005"	49,420	20,290
RST-362	3.625"	3.458"	±.006"	.120"		.084"	3.433"		.111"	±.003"	.250"	±.005"	50,560	21,520
RST-368	3.687"	3.517"	±.006"	.120"		.085"	3.490"		.111"	±.003"	.250"	±.005"	51,430	22,150
RST-375	3.750"	3.577"	±.006"	.120"		.087"	3.550"		.111"	±.003"	.250"	±.005"	52,310	23,060

FOR DETAILED SPECIFICATIONS AND TOLERANCES, VISIT HUYETT.COM.

Prices, materials, dimensions, tolerances, designs, and grades subject to change without notice. © 2017 G.L. Huyett

EXTERNAL – 2-TURN MEDIUM-HEAVY DUTY



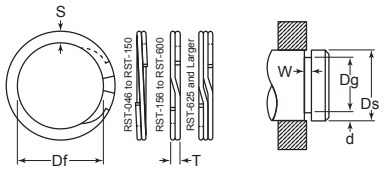

HOW TO IDENTIFY

1. Verify multi-turn design and appearance.
2. Measure the shaft diameter (Ds).
3. Measure the ring free inside diameter (Df).
4. Measure the thickness (T).
5. Measure the radial wall (S).
6. Find the part in the chart.

Item #	Shaft Diameter	Groove Size					Ring Size & Weight						Thrust Load	
		Diameter		Width		Depth	Free Diameter		Thickness		Section		Ring Safety Factor of 3	Groove Safety Factor of 2
	Ds	Dg	Tol.	W	Tol.	d	Df	Tol.	T	Tol.	S	Tol.		
RST-387	3.875"	3.696"	±.006"	.120"		.090"	3.670"		.111"	±.003"	.250"	±.005"	54,050	24,650
RST-393	3.938"	3.756"	±.006"	.120"		.091"	3.730"		.111"	±.003"	.250"	±.005"	54,930	25,330
RST-400	4.000"	3.815"	±.006"	.120"		.093"	3.787"		.111"	±.003"	.250"	±.005"	55,800	26,300
RST-425	4.250"	4.065"	±.006"	.120"	+.005/ -.000"	.093"	4.032"	+.000/ -.040"	.111"	±.003"	.250"	±.005"	59,280	27,940
RST-437	4.375"	4.190"	±.006"	.120"		.093"	4.162"		.111"	±.003"	.250"	±.005"	61,030	28,760
RST-450	4.500"	4.310"	±.006"	.120"		.095"	4.280"		.111"	±.003"	.250"	±.005"	62,770	30,220
RST-475	4.750"	4.550"	±.006"	.120"		.100"	4.515"		.111"	±.003"	.250"	±.005"	66,260	33,580
RST-500	5.000"	4.790"	±.006"	.120"		.105"	4.755"		.111"	±.003"	.250"	±.005"	69,740	37,110
RST-525	5.250"	5.030"	±.007"	.139"		.110"	4.995"		.127"	±.004"	.375"	±.006"	83,790	40,820
RST-550	5.500"	5.265"	±.007"	.139"	+.006/ -.000"	.118"	5.229"	+.000/ -.050"	.127"	±.004"	.375"	±.006"	87,780	45,880
RST-575	5.750"	5.505"	±.007"	.139"		.123"	5.466"		.127"	±.004"	.375"	±.006"	91,770	49,990
RST-600	6.000"	5.745"	±.007"	.139"		.128"	5.705"		.127"	±.004"	.375"	±.006"	95,760	54,290
RST-625	6.250"	5.985"	±.008"	.174"		.133"	5.942"		.165"	±.005"	.312"	±.006"	129,590	58,760
RST-650	6.500"	6.225"	±.008"	.174"		.138"	6.182"	+.000/ -.060"	.165"	±.005"	.312"	±.006"	134,780	63,410
RST-675	6.750"	6.465"	±.008"	.174"		.143"	6.420"		.165"	±.005"	.312"	±.006"	139,960	68,230
RST-700	7.000"	6.705"	±.008"	.174"		.148"	6.658"		.165"	±.005"	.312"	±.006"	145,140	73,230
RST-725	7.250"	6.942"	±.008"	.174"		.154"	6.894"		.165"	±.005"	.312"	±.006"	172,190	78,290
RST-750	7.500"	7.180"	±.008"	.209"		.160"	7.130"		.189"	±.005"	.375"	±.006"	178,130	84,820
RST-775	7.750"	7.420"	±.008"	.209"		.165"	7.368"		.189"	±.005"	.375"	±.006"	184,070	90,390
RST-800	8.000"	7.660"	±.008"	.209"	+.008/ -.000"	.170"	7.607"		.189"	±.005"	.375"	±.006"	190,000	96,130
RST-825	8.250"	7.900"	±.008"	.209"		.175"	7.845"		.189"	±.005"	.375"	±.006"	195,940	102,050
RST-850	8.500"	8.140"	±.008"	.209"		.180"	8.083"	+.000/ -.070"	.189"	±.005"	.375"	±.006"	201,880	108,150
RST-875	8.750"	8.383"	±.008"	.209"		.184"	8.321"		.189"	±.005"	.375"	±.006"	207,820	113,800
RST-900	9.000"	8.620"	±.008"	.209"		.190"	8.560"		.189"	±.005"	.375"	±.006"	213,750	120,870
RST-925	9.250"	8.860"	±.008"	.209"		.195"	8.798"		.189"	±.005"	.375"	±.006"	219,690	127,500
RST-950	9.500"	9.100"	±.008"	.209"		.200"	9.036"		.189"	±.005"	.375"	±.006"	225,630	134,300
RST-975	9.750"	9.338"	±.008"	.209"		.206"	9.273"		.189"	±.005"	.375"	±.006"	231,570	141,970
RST-1000	10.000"	9.575"	±.008"	.209"		.213"	9.508"		.189"	±.005"	.375"	±.006"	237,500	150,560

Material: Carbon Spring Steel

APPLICATIONS

The multi-turn spiral retaining ring installs securely in the groove while maintaining clearance for the housing to rotate freely.

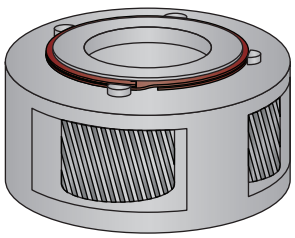

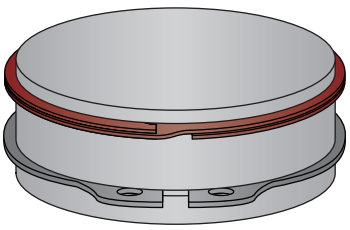

Spiral Rings are manufactured by coiling the ring from flat wire, giving the ring 360° of contact in the groove. This eliminates the gap and lugs that are present with basic housing/shaft rings.

Prices, materials, dimensions, tolerances, designs, and grades subject to change without notice. © 2017 G.L. Huyett