M12 & M16

EXCEEDS 72 HR SALT SPRAY.
8,000 PSI MAX PRESSURE.

DIN 71412

The extra large 16.0 mm threads are well suited for extreme environments. These fittings accept large volumes of heavy weight lubricants, and perform well in cold weather.

TECHNICAL DRAWINGS ARE APPROXIMATE ACTUAL SIZE

H2126
90° Angle
M12 x 1.5 Taper Thread
Standard Shank

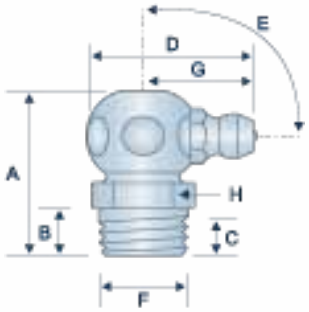

H2148
Straight
M12 x 1.75 Taper Thread
Standard Shank

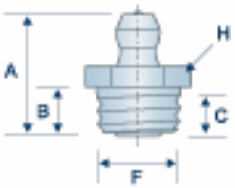

H2149
45° Angle
M12 x 1.75 Taper Thread
Standard Shank

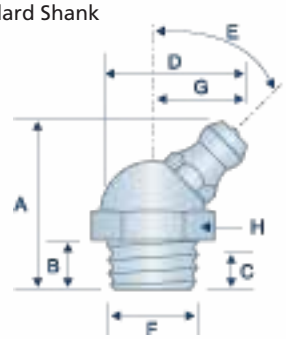

H2150
90° Angle
M12 x 1.75 Taper Thread
Standard Shank

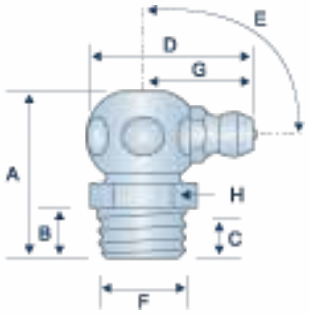

H2151
Straight
M16 x 1.5 Taper Thread
Standard Shank

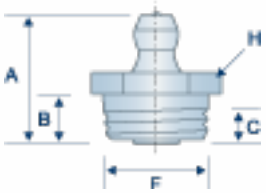

H2152
45° Angle
M16 x 1.5 Taper Thread
Standard Shank

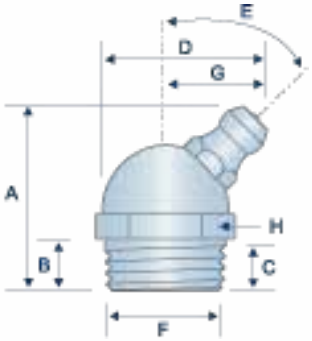

ITEM #	THREAD	ANGLE (E)	OVERALL LENGTH (A)	SHANK LENGTH (B)	MIN. THREAD LENGTH (C)	OVERALL WIDTH (D)	THREAD DIAMETER (F)	SWING CLEARANCE (G)	HEX (H)
H2126	M12 X 1.5	90°	22.0 MM	6.5 MM	3.7 MM	23.0 MM	12.0 MM	16.0 MM	14.0 MM
H2148	M12 X 1.75	STRAIGHT	17.5 MM	6.5 MM	3.7 MM	—	12.0 MM	—	14.0 MM
H2149	M12 X 1.75	45°	22.5 MM	6.5 MM	3.7 MM	19.0 MM	12.0 MM	12.0 MM	14.0 MM
H2150	M12 X 1.75	90°	22.0 MM	6.5 MM	3.7 MM	23.0 MM	12.0 MM	16.0 MM	14.0 MM
H2151	M16 X 1.5	STRAIGHT	18.0 MM	7.0 MM	4.0 MM	—	16.0 MM	—	17.0 MM
H2152	M16 X 1.5	45°	25.5 MM	7.0 MM	4.0 MM	22.0 MM	16.0 MM	13.0 MM	17.0 MM

Common Parts
Parts with this designation are in wide distribution.

Alemite®
Alemite® is a registered trademark of Alemite, LLC, Johnson City, TN, USA.

Lincoln Industrial®
Lincoln Industrial® is a registered trademark of Lincoln Industrial (USA) Corp.

John Deere®
John Deere® is a registered trademark of Deere and Company, Moline, Illinois.

All manufacturer names and numbers are for cross reference identification purposes only. In no way are we implying that our parts were made by the manufacturers listed.
Prices, materials, dimensions, tolerances, designs and grades subject to change without notice. © G.L. Huyett 2011