HUYETT.COM • 785-392-3017
BOX 232 • MINNEAPOLIS, KS • 67467
SALES@HUYETT.COM • FAX 785-392-2845

STAINLESS & NONFERROUS – IMPERIAL

DESCRIPTION

Machine keys are used to transmit torque from a rotating shaft to a gear or sprocket. They can be finished in a variety of shapes, sizes, and materials for just about any application. Standard sizes are ready to use with little or no cutting or filing.

HOW TO IDENTIFY

1. Measure height (A).
2. Measure width (B).
3. Measure length (C).
4. Build the part number from the chart on the next page.

FORM B

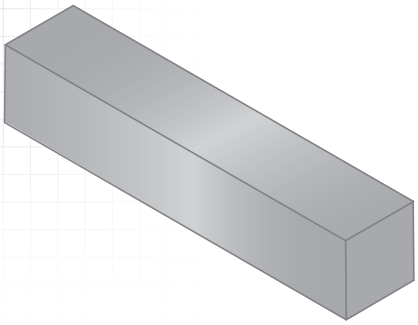

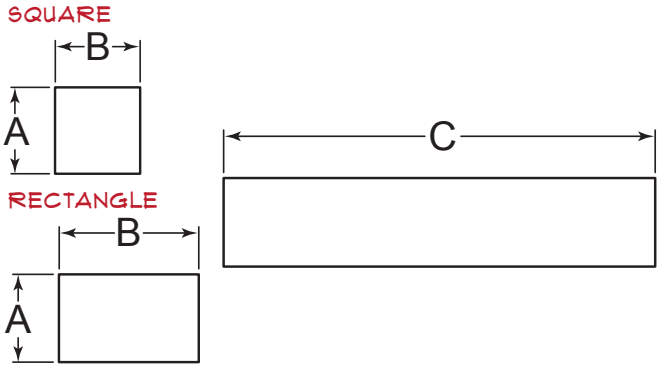

FORM A

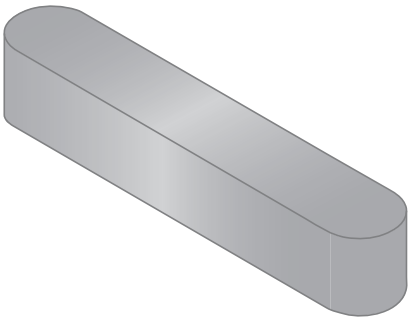

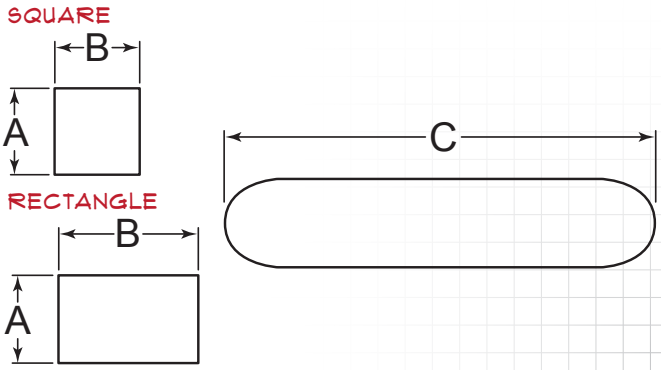

PREFIX MATERIAL/FINISH

FORM B

STAINLESS STEEL

70	=	300 Series Stainless Steel, Plain••
75	=	300 Series Stainless Steel, Plain, Oversize
80	=	316 Stainless Steel, Plain••
85	=	416 Stainless Steel, Plain••

NONFERROUS

04	=	Aluminum, Plain••
06	=	Brass, Plain••

FORM A

STAINLESS STEEL

72	=	300 Series Stainless Steel, Plain, Squares••
77	=	300 Series Stainless Steel, Plain, Oversize
82	=	316 Stainless Steel, Plain••
87	=	416 Stainless Steel, Plain••

Material/finish combinations may not be available in all sizes.
••Depending on profile, size can vary over or under from nominal size.

SEE PAGE 66 FOR TOLERANCES

MEASURING IMPERIAL KEYS

Imperial machine keys are available in square or rectangle profiles.

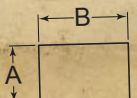

IMPERIAL

Imperial machine keys call out height (A) first, then width (B).

Prices, materials, dimensions, tolerances, designs, and grades subject to change without notice. © 2016 G.L. Huyett

STAINLESS & NONFERROUS – IMPERIAL

HOW TO BUILD A PART NUMBER

LIST THE SMALLER DIMENSION OF (A) OR (B) FIRST

8005002500-2750

ITEM PREFIX	(A) HEIGHT	(B) WIDTH	(C) LENGTH
	1/16" to 2-1/2"	1/16" to 2-1/2"	3/16" to <12"
80	0500	2500	-2750
TO ORDER CHOOSE YOUR MATERIAL,	CHOOSE YOUR HEIGHT,	CHOOSE YOUR WIDTH,	CHOOSE YOUR LENGTH.

CODE	MATERIAL
04	Aluminum, Plain, Form B••
06	Brass, Plain, Form B••
70	300 Series Stainless Steel, Plain, Form B••
72	300 Series Stainless Steel, Plain, Form A, Squares••
75	300 Series Stainless Steel, Plain, Form B, Oversize
77	300 Series Stainless Steel, Plain, Form A, Oversize
80	316 Stainless Steel, Plain, Form B••
82	316 Stainless Steel, Plain, Form A••
85	416 Stainless Steel, Plain, Form B••
87	416 Stainless Steel, Plain, Form A••

••Depending on profile, size can vary over or under from nominal size.

18-8 IS NOT A SPECIFICATION FOR STAINLESS STEEL

G.L. HUYETT CONSIDERS 18-8 TO BE ANY 300 SERIES STAINLESS STEEL

CODE	HEIGHT & WIDTH SIZE OPTIONS
0062	.0625" (1/16)
0093	.0938" (3/32)
0125	.1250" (1/8)
0156	.1563" (5/32)
0187	.1875" (3/16)
0218	.2188" (7/32)
0250	.2500" (1/4)
0281	.2813" (9/32)
0312	.3125" (5/16)
0375	.3750" (3/8)
0437	.4375" (7/16)
0500	.5000" (1/2)
0562	.5625" (9/16)
0625	.6250" (5/8)
0687	.6875" (11/16)
0750	.7500" (3/4)
0812	.8125" (13/16)
0875	.8750" (7/8)
0937	.9378" (15/16)
1000	1.0000" (1)
1062	1.0625" (1-1/16)
1125	1.1250" (1-1/8)
1187	1.1875" (1-3/16)
1250	1.2500" (1-1/4)
1375	1.3750" (1-3/8)
1500	1.5000" (1-1/2)
1625	1.6250" (1-5/8)
1750	1.7500" (1-3/4)
1875	1.8750" (1-7/8)
2000	2.0000" (2)
2250	2.2500" (2-1/4)
2500	2.5000" (2-1/2)

Nonstandard sizes up to 2-1/2" are available.

CODE	LENGTH
0187	.1875" (3/16)
0250	.2500" (1/4)
0375	.3750" (3/8)
0500	.5000" (1/2)
0625	.6250" (5/8)
0750	.7500" (3/4)
0875	.8750" (7/8)
1000	1.0000" (1)
1500	1.5000" (1-1/2)
2000	2.0000" (2)
4000	4.0000" (4)
6000	6.0000" (6)
8000	8.0000" (8)
10	10.0000" (10)
11	11.0000" (11)
11.5	11.5000" (11-1/2)

Nonstandard lengths less than 12" are available.

DON'T SEE WHAT YOU'RE LOOKING FOR? CONTACT SALES@HUYETT.COM OR CALL 785-392-3017

FOR DETAILED SPECIFICATIONS AND TOLERANCES, VISIT HUYETT.COM.

Prices, materials, dimensions, tolerances, designs, and grades subject to change without notice. © 2016 G.L. Huyett

BOX 232 • MINNEAPOLIS, KS • 67467
SALES@HUYETT.COM • FAX 785-392-2845

IMPERIAL TOLERANCES

MATERIAL		FORM	SQUARE		RECTANGLE		LENGTH	
(Prefix)	*(Material/Finish)*		*(Size Range)*	*(Tolerance)*	*(Size Range)*	*(Tolerance)*	*(Size Range)*	*(Tolerance)*
Cold Finished Steel								
30	Cold Finished Steel, Plain*, Undersize	Form B	.0625 – .7500" >.7500 – 1.5000" >1.5000 – 2.5000" >2.5000" +	+0/-.0020" +0/-.0030" +0/-.0040" +0/-.0060"	.0938 – .7500" >.7500 – 1.5000" >1.5000 – 3.0000" >3.0000" +	+0/-.0030" +0/-.0040" +0/-.0050" +0/-.0060"	All sizes	+0/-.0300"
31	Cold Finished Steel, Zinc Clear Trivalent, Undersize							
32	Cold Finished Steel, Plain*, Undersize	Form A						
32Z	Cold Finished Steel, Zinc Clear Trivalent, Undersize							
35	Cold Finished Steel, Plain*, Oversize	Form B	.0625 – .7500" >.7500 – 1.5000" >1.5000 – 2.5000"	+.0020/-0" +.0030/-0" +.0040/-0"	.1875 – .7500" >.7500 – 1.5000" >1.5000 – 3.0000"	+.0030/-0" +.0040/-0" +.0050/-0"	All sizes	+0/-.0300"
36	Cold Finished Steel, Zinc Clear Trivalent, Oversize							
37	Cold Finished Steel, Plain*, Oversize	Form A						
45	Cold Finished Steel, Plain* (1045), Undersize	Form B	.0625 – .7500" >.7500 – 1.5000" >1.5000 – 2.5000"	+0/-.0040" +0/-.0050" +0/-.0060"	.2500 – .7500" >.7500 – 1.5000" >1.5000 – 3.0000"	+0/-.0040" +0/-.0050" +0/-.0060"	All sizes	+0/-.0300"
46	Cold Finished Steel, Zinc Clear Trivalent, Undersize							
47	Cold Finished Steel, Plain* (1045), Undersize	Form A						
65	Cold Finished Alloy Steel, Plain* (4140), Undersize	Form B	.0625 – .7500" >.7500 – 1.5000" >1.5000 – 3.0000"	+0/-.005" +0/-.006" +0/-.007"	.0625 – .7500" >.7500 – 1.5000" >1.5000 – 3.0000"	+0/-.005" +0/-.006" +0/-.007"	All sizes	+0/-.0300"
66	Cold Finished Steel, Zinc Clear Trivalent, Undersize							
67	Cold Finished Alloy Steel, Plain* (4140), Undersize	Form A						
Moltrup								
60	Moltrup Quality Steel, Plain* (1045 or 8630)	Form B	.0625 – 1.2500" >1.2500 – 3.0000"	+.0010/-0" +.0020/-0"	*(Width)* .0625 – 1.2500" >1.2500 – 3.0000" *(Height)* .0625 – 7.0000"	 +.0010/-0" +.0020/-0" ±.0050"	All Sizes	+0/-.0300"
62	Moltrup Quality Steel, Plain* (1045 or 8630)	Form A						

Note: Unless specifically stated, our standard machine key stock (30 series) is any one of the following grades, subject to market availability: 1018, 1035, 1045, 1095, 1215, or 8630. Call for precise grade.

Prices, materials, dimensions, tolerances, designs, and grades subject to change without notice. © 2016 G.L. Huyett
**Limited warranty for surface finish: 30 days from date of shipment. See page ## for details.*

IMPERIAL TOLERANCES

MATERIAL		FORM	SQUARE		RECTANGLE		LENGTH	
(Prefix)	(Material/Finish)		(Size Range)	(Tolerance)	(Size Range)	(Tolerance)	(Size Range)	(Tolerance)
Stainless Steel								
70	300 Series Stainless Steel, Plain••	Form B	.0937 – .3120" >.3120 – .5000" >.5000 – 1.0000" >1.0000 – 2.0000"	+0/-.0020" +0/-.0030" +0/-.0040" +0/-.0060"	*(Width Size)* .0625 – .3750" >.3750 – 1.0000" >1.0010 – 2.0000" *(Height Size)* .03500 – 1.0000" >1.0000 – 2.0000"	 ±.0050" ±.0040" ±.0060" ±.0020" ±.0030"	All sizes	+0/-.0300"
72	300 Series Stainless Steel, Plain••	Form A						
75	300 Series Stainless Steel, Plain, Oversize	Form B	.0625 – .5625" >.5625 – 1.0000" >1.0000 – 2.0000"	+.0030/-0" +.0050/-0" +.0060/-0"	.0625 – .5625" >.5625 – 1.0000" >1.0000 – 2.0000"	+.0030/-0" +.0050/-0" +.0060/-0"	All sizes	+0/-.0300"
77	300 Series Stainless Steel, Plain, Oversize	Form A						
80	316 Stainless Steel, Plain••	Form B	.0937 – .3120" >.3120 – .5000" >.5000 – 1.0000" >1.0000 – 2.0000"	+0/-.0020" +0/-.0030" +0/-.0040" +0/-.0060"	*(Width Size)* .0625 – .3750" >.3750 – 1.0000" >1.0010 – 2.0000" *(Height Size)* .03500 – 1.0000" >1.0000 – 2.0000"	 ±.0050" ±.0040" ±.0060" ±.0020" ±.0030"	All sizes	+0/-.0300"
82	316 Stainless Steel, Plain••	Form A						
85	416 Stainless Steel, Plain••	Form B						
87	416 Stainless Steel, Plain••	Form A						
Nonferrous								
04	Aluminum, Plain••	Form B	.1250 – .3750" >.3750 – .6250" >.6250 – .8750" >.8750 – 1.2500" >1.2500 – 1.7500" >1.7500 – 2.5000"	±.0080" ±.0090" ±.0100" ±.0120" ±.0140" ±.0240"	.1250 – .3750" >.3750 – .6250" >.6250 – .8750" >.8750 – 1.2500" >1.2500 – 1.7500" >1.7500 – 2.5000"	±.0080" ±.0090" ±.0100" ±.0120" ±.0140" ±.0240"	All Sizes	+0/-.0300"
06	Brass, Plain••	Form B	.1250" >.1875 – .5000" >.5000 – 1.0000" >1.0000 – 2.0000"	±.0020" ±.0030" ±.0040" ±.0050"	.1250" >.1250 – .5000" >.5000 – 1.0000" >1.0000 – 2.0000"	±.0020" ±.0030" ±.0040" ±.0050"	All Sizes	+0/-.0300"

••Depending on profile, size can vary over or under from nominal size.

18-8 IS NOT A SPECIFICATION FOR STAINLESS STEEL

G.L. HUYETT CONSIDERS 18-8 TO BE ANY 300 SERIES STAINLESS STEEL

ENVIRONMENTAL CONCERNS

G.L. Huyett is committed to maintaining the safety of our environment. The processes for plating and coating steels have the potential of introducing harmful chemical substances into the environment and are strictly controlled. G.L. Huyett complies with all environmental regulations and laws which apply to our products and services.

Learn more at huyett.com/quality.

REACH
Registration, Evaluation, Authorization, and Restriction of Chemical Substances

RoHS
Restriction of Hazardous Substances

Prices, materials, dimensions, tolerances, designs, and grades subject to change without notice. © 2016 G.L. Huyett