HUYETT.COM • 785-392-3017
BOX 232 • MINNEAPOLIS, KS • 67467
SALES@HUYETT.COM • FAX 785-392-2845

T-HANDLE

DESCRIPTION

T-handle pins provide a comfortable, firm grip for quick release of the pin from its application site. They are especially helpful when used as a positioning device or in repetitive use situations.

HOW TO IDENTIFY

1. Verify T-shaped handle.
2. Measure diameter (B).
3. Measure effective length (C).
4. Find the part in the chart below.

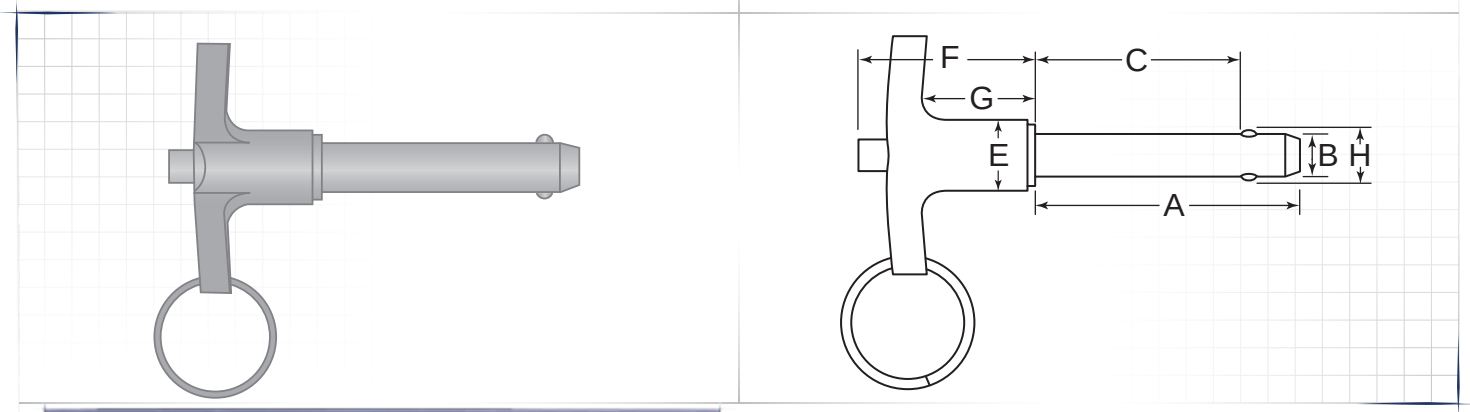

PREFIX MATERIAL/FINISH

PLT = 4130 ALLOY STEEL, CADMIUM
PLTS = 17-4 PH STAINLESS STEEL, PASSIVATED
PLTS3 = 304 STAINLESS STEEL, PASSIVATED
Material/finish combinations may not be available in all sizes.

TETHERS AVAILABLE
SEE PAGE 128

3/16 (.1875")
(B) Outside Diameter: .1885/.1870"
(E) Body Diameter: .5000" (1/2)
(F) Body Handle Height: 1.2500" (1-1/4)
(G) Shoulder Height: .750" (3/4)
(H) Double Ball Dimension: .2200"

ITEM NUMBER	(C) EFF. LENGTH +.020/-.000"	(A) SHANK LENGTH
PREFIX-0187-0500	.500" (1/2)	.760"
PREFIX-0187-0750	.750" (3/4)	1.010"
PREFIX-0187-1000	1.000" (1)	1.260"
PREFIX-0187-1250	1.250" (1-1/4)	1.510"
PREFIX-0187-1500	1.500" (1-1/2)	1.760"
PREFIX-0187-2000	2.000" (2)	2.260"
PREFIX-0187-2500	2.500" (2-1/2)	2.760"
PREFIX-0187-3000	3.000" (3)	3.260"
PREFIX-0187-4000	4.000" (4)	4.260"

1/4 (.2500")
(B) Outside Diameter: .2485/.2470"
(E) Body Diameter: .5000" (1/2)
(F) Body Handle Height: 1.2500" (1-1/4)
(G) Shoulder Height: .750" (3/4)
(H) Double Ball Dimension: .2890"

ITEM NUMBER	(C) EFF. LENGTH +.020/-.000"	(A) SHANK LENGTH
PREFIX-0250-0500	.500" (1/2)	.790"
PREFIX-0250-0750	.750" (3/4)	1.040"
PREFIX-0250-1000	1.000" (1)	1.290"
PREFIX-0250-1250	1.250" (1-1/4)	1.540"
PREFIX-0250-1500	1.500" (1-1/2)	1.790"
PREFIX-0250-1750	1.750" (1-3/4)	2.040"
PREFIX-0250-2000	2.000" (2)	2.290"
PREFIX-0250-2500	2.500" (2-1/2)	2.790"
PREFIX-0250-3000	3.000" (3)	3.290"
PREFIX-0250-3500	3.500" (3-1/2)	3.790"
PREFIX-0250-4000	4.000" (4)	4.290"

5/16 (.3125")
(B) Outside Diameter: .3110/.3095"
(E) Body Diameter: .5000" (1/2)
(F) Body Handle Height: 1.2500" (1-1/4)
(G) Shoulder Height: .750" (3/4)
(H) Double Ball Dimension: .3750" (3/8)

ITEM NUMBER	(C) EFF. LENGTH +.020/-.000"	(A) SHANK LENGTH
PREFIX-0312-0500	.500" (1/2)	.830"
PREFIX-0312-0750	.750" (3/4)	1.080"
PREFIX-0312-1000	1.000" (1)	1.330"
PREFIX-0312-1250	1.250" (1-1/4)	1.580"
PREFIX-0312-1500	1.500" (1-1/2)	1.830"
PREFIX-0312-2000	2.000" (2)	2.330"
PREFIX-0312-2500	2.500" (2-1/2)	2.830"
PREFIX-0312-3000	3.000" (3)	3.330"
PREFIX-0312-3500	3.500" (3-1/2)	3.830"
PREFIX-0312-4000	4.000" (4)	4.330"
PREFIX-0312-4500	4.500" (4-1/2)	4.830"
PREFIX-0312-5000	5.000" (5)	5.330"
PREFIX-0312-6000	6.000" (6)	6.330"

3/8 (.3750")
(B) Outside Diameter: .3735/.3720"
(E) Body Diameter: .5938" (19/32)
(F) Body Handle Height: 1.4375" (1-7/16)
(G) Shoulder Height: .938" (15/16)
(H) Double Ball Dimension: .4400"

ITEM NUMBER	(C) EFF. LENGTH +.020/-.000"	(A) SHANK LENGTH
PREFIX-0375-0500	.500" (1/2)	.865"
PREFIX-0375-0750	.750" (3/4)	1.115"
PREFIX-0375-1000	1.000" (1)	1.365"
PREFIX-0375-1250	1.250" (1-1/4)	1.615"
PREFIX-0375-1500	1.500" (1-1/2)	1.865"
PREFIX-0375-1750	1.750" (1-3/4)	2.115"
PREFIX-0375-2000	2.000" (2)	2.365"
PREFIX-0375-2250	2.250" (2-1/4)	2.615"
PREFIX-0375-2500	2.500" (2-1/2)	2.865"
PREFIX-0375-3000	3.000" (3)	3.365"
PREFIX-0375-3500	3.500" (3-1/2)	3.865"
PREFIX-0375-4000	4.000" (4)	4.365"
PREFIX-0375-4500	4.500" (4-1/2)	4.865"
PREFIX-0375-5000	5.000" (5)	5.365"
PREFIX-0375-5500	5.500" (5-1/2)	5.865"
PREFIX-0375-6000	6.000" (6)	6.365"

FOR DETAILED SPECIFICATIONS AND TOLERANCES, VISIT HUYETT.COM.

Prices, materials, dimensions, tolerances, designs, and grades subject to change without notice. © 2015 G.L. Huyett

T-HANDLE

ITEM NUMBER	(C) EFF. LENGTH +.020/-.000"	(A) SHANK LENGTH
7/16 (.4375") (B) Outside Diameter: .4360/.4345"		
(E) Body Diameter: .5938" (19/32) (F) Body Handle Height: 1.4375" (1-7/16) (G) Shoulder Height: .938" (15/16) (H) Double Ball Dimension: .5090"		
PREFIX-0437-1000	1.000" (1)	1.380"
PREFIX-0437-1500	1.500" (1-1/2)	1.880"
PREFIX-0437-2000	2.000" (2)	2.380"
PREFIX-0437-2500	2.500" (2-1/2)	2.880"
PREFIX-0437-3000	3.000" (3)	3.380"
PREFIX-0437-4000	4.000" (4)	4.380"
1/2 (.5000") (B) Outside Diameter: .4985/.4970"		
(E) Body Diameter: .7500" (3/4) (F) Body Handle Height: 1.6250" (1-5/8) (G) Shoulder Height: 1.000" (1) (H) Double Ball Dimension: .5940" (19/32)		
PREFIX-0500-1000	1.000" (1)	1.460"
PREFIX-0500-1250	1.250" (1-1/4)	1.710"
PREFIX-0500-1500	1.500" (1-1/2)	1.960"
PREFIX-0500-1750	1.750" (1-3/4)	2.210"
PREFIX-0500-2000	2.000" (2)	2.460"
PREFIX-0500-2250	2.250" (2-1/4)	2.710"
PREFIX-0500-2500	2.500" (2-1/2)	2.960"
PREFIX-0500-3000	3.000" (3)	3.460"
PREFIX-0500-3500	3.500" (3-1/2)	3.960"
PREFIX-0500-4000	4.000" (4)	4.460"
PREFIX-0500-4500	4.500" (4-1/2)	4.960"
PREFIX-0500-5000	5.000" (5)	5.460"
PREFIX-0500-5500	5.500" (5-1/2)	5.960"
PREFIX-0500-6000	6.000" (6)	6.460"
9/16 (.5625") (B) Outside Diameter: .5610/.5595"		
(E) Body Diameter: .7500" (3/4) (F) Body Handle Height: 1.6250" (1-5/8) (G) Shoulder Height: 1.000" (1) (H) Double Ball Dimension: .6660"		
PREFIX-0562-2000	2.000" (2)	2.510"
PREFIX-0562-2500	2.500" (2-1/2)	3.010"
PREFIX-0562-3000	3.000" (3)	3.510"
5/8 (.6250") (B) Outside Diameter: .6235/.6220"		
(E) Body Diameter: .9375" (15/16) (F) Body Handle Height: 1.9688" (1-31/32) (G) Shoulder Height: 1.188" (1-3/16) (H) Double Ball Dimension: .7500" (3/4)		
PREFIX-0625-1500	1.500" (1-1/2)	2.080"
PREFIX-0625-2000	2.000" (2)	2.580"
PREFIX-0625-2500	2.500" (2-1/2)	3.080"
PREFIX-0625-3000	3.000" (3)	3.580"
PREFIX-0625-3500	3.500" (3-1/2)	4.080"
PREFIX-0625-4000	4.000" (4)	4.580"
PREFIX-0625-4500	4.500" (4-1/2)	5.080"
PREFIX-0625-5000	5.000" (5)	5.580"
PREFIX-0625-5500	5.500" (5-1/2)	6.080"
PREFIX-0625-6000	6.000" (6)	6.580"
3/4 (.7500") (B) Outside Diameter: .7485/.7470"		
(E) Body Diameter: .9375" (15/16) (F) Body Handle Height: 1.9688" (1-31/32) (G) Shoulder Height: 1.188" (1-3/16) (H) Double Ball Dimension: .8870"		
PREFIX-0750-1500	1.500" (1-1/2)	2.170"
PREFIX-0750-2000	2.000" (2)	2.670"
PREFIX-0750-2500	2.500" (2-1/2)	3.170"
PREFIX-0750-3000	3.000" (3)	3.670"
PREFIX-0750-3500	3.500" (3-1/2)	4.170"
PREFIX-0750-4000	4.000" (4)	4.670"
PREFIX-0750-4500	4.500" (4-1/2)	5.170"
PREFIX-0750-5000	5.000" (5)	5.670"
PREFIX-0750-5500	5.500" (5-1/2)	6.170"
PREFIX-0750-6000	6.000" (6)	6.670"
7/8 (.8750") (B) Outside Diameter: .8735/.8720"		
(E) Body Diameter: 1.2500" (1-1/4) (F) Body Handle Height: 2.2500" (2-1/4) (G) Shoulder Height: 1.344" (1-11/32) (H) Double Ball Dimension: 1.0470" (1-3/64)		
PREFIX-0875-3000	3.000" (3)	3.760"
PREFIX-0875-4000	4.000" (4)	4.760"
1 (1.0000") (B) Outside Diameter: .9985/.9970"		
(E) Body Diameter: 1.2500" (1-1/4) (F) Body Handle Height: 2.2500" (2-1/4) (G) Shoulder Height: 1.344" (1-11/32) (H) Double Ball Dimension: 1.2190" (1-7/32)		
PREFIX-1000-2000	2.000" (2)	2.890"
PREFIX-1000-2500	2.500" (2-1/2)	3.390"
PREFIX-1000-3000	3.000" (3)	3.890"
PREFIX-1000-4000	4.000" (4)	4.890"
PREFIX-1000-5000	5.000" (5)	5.890"
PREFIX-1000-6000	6.000" (6)	6.890"

APPLICATION

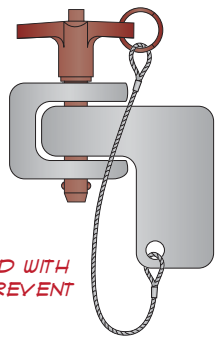

EASILY SECURED WITH A TETHER TO PREVENT PIN LOSS

SHEAR STRENGTH

Shear strength measures the stress required to produce fracture in a pin. A single shear is the force required to break a pin into two pieces. Double shear measures the force required to break the pin into three pieces. *See "Measuring Steel Strength," page 10.*

304 STAINLESS

DIAMETER	PULLOUT STRENGTH (LBS.)	CALCULATED DOUBLE SHEAR STRENGTH (LBS.)
1/4"	180	2,200
5/16"	400	3,500
3/8"	450	4,500
1/2"	900	11,500
5/8"	1,500	20,000

17-4 STAINLESS

DIAMETER	PULLOUT STRENGTH (LBS.)	CALCULATED DOUBLE SHEAR STRENGTH (LBS.)
1/4"	–	–
5/16"	–	–
3/8"	575	20,600
1/2"	1,160	36,800
5/8"	2,070	57,500

4130 STEEL

DIAMETER	PULLOUT STRENGTH (LBS.)	CALCULATED DOUBLE SHEAR STRENGTH (LBS.)
1/4"	230	8,200
5/16"	510	12,800
3/8"	575	18,400
1/2"	1,160	32,800
5/8"	2,070	51,200

FOR DETAILED SPECIFICATIONS AND TOLERANCES, VISIT HUYETT.COM.

Prices, materials, dimensions, tolerances, designs, and grades subject to change without notice. © 2015 G.L. Huyett