HUYETT.COM • 785-392-3017
BOX 232 • MINNEAPOLIS, KS • 67467
SALES@HUYETT.COM • FAX 785-392-2845

HEX KEY – IMPERIAL

DESCRIPTION

An L-shaped bar with a hexagonal profile. Either end can be used to tighten or loosen socket head cap screws or set screws with hexagonal sockets. Hex key sizes are measured across parallel flats. They are more commonly known as "Allen Wrenches," a proprietary name of Apex Tool Group, LLC.

HOW TO IDENTIFY

1. Verify L-shaped hexagonal key.
2. Measure hex size (A).
3. Find the part number in the chart below.

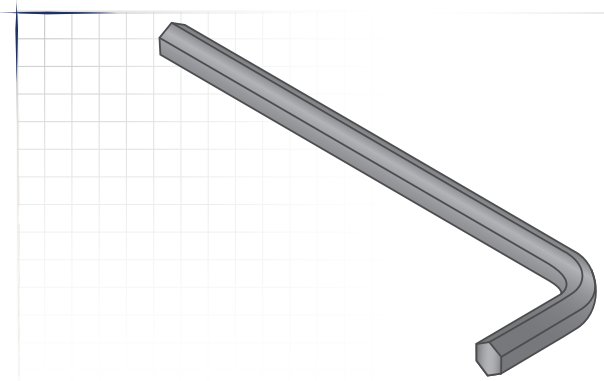

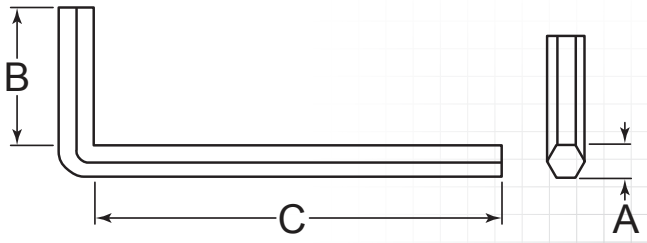

PREFIX — MATERIAL/FINISH

HK-01 = COLD FINISHED 8650 ALLOY STEEL, BLACK OXIDE, SHORT ARM
HK-02 = COLD FINISHED 8650 ALLOY STEEL, BLACK OXIDE, LONG ARM
HK-03 = COLD FINISHED 6150 ALLOY STEEL, BLACK OXIDE, SHORT ARM
HK-04 = COLD FINISHED 6150 ALLOY STEEL, BLACK OXIDE, LONG ARM

Material/finish combinations may not be available in all sizes.

LONG ARM/SHORT ARM REFERS TO THE LENGTH OF THE SHANK (C)

HOW TO BUILD A PART NUMBER

HK-01-0500

ARM TYPE

HK-01-

TO ORDER CHOOSE YOUR ARM TYPE,

CODE	ARM TYPE
HK-01-	Short Arm (8650 Alloy)
HK-02-	Long Arm (8650 Alloy)
HK-03-	Short Arm (6150 Alloy)
HK-04-	Long Arm (6150 Alloy)

(A) HEX SIZE

0500

CHOOSE YOUR HEX SIZE.

CODE	HEX SIZE	(C) SHANK LENGTH	
		HK-01, HK-03	HK-02, HK-04
0028	.028"	1.188" (1-3/16)	–
0035	.035"	1.188" (1-3/16)	–
0050	.050"	1.625" (1-5/8)	2.875" (2-7/8)
0063	.063" (1/16)	1.750" (1-3/4)	3.000" (3)
0078	.078" (5/64)	1.875" (1-7/8)	3.125" (3-1/8)
0094	.094" (3/32)	2.000" (2)	3.375" (3-3/8)
0109	.109" (7/64)	2.125" (2-1/8)	3.500" (3-1/2)
0125	.125" (1/8)	2.313" (2-5/16)	3.750" (3-3/4)
0141	.141" (9/64)	2.313" (2-5/16)	3.875" (3-7/8)
0156	.156" (5/32)	2.500" (2-1/2)	4.125" (4-1/8)
0188	.188" (3/16)	2.750" (2-3/4)	4.500" (4-1/2)
0219	.219" (7/32)	3.000" (3)	4.875" (4-7/8)
0250	.250" (1/4)	3.250" (3-1/4)	5.250" (5-1/4)
0313	.313" (5/16)	3.750" (3-3/4)	6.000" (6)

CODE	HEX SIZE	(C) SHANK LENGTH	
		HK-01, HK-03	HK-02, HK-04
0375	.375" (3/8)	4.313" (4-5/16)	6.750" (6-3/4)
0438	.438" (7/16)	4.750" (4-3/4)	7.500" (7-1/2)
0500	.500" (1/2)	5.250" (5-1/4)	8.250" (8-1/4)
0563	.563" (9/16)	5.750" (5-3/4)	9.000" (9)
0625	.625" (5/8)	6.250" (6-1/4)	9.750" (9-3/4)
0750	.750" (3/4)	7.250" (7-1/4)	11.250" (11-1/4)
0875	.875" (7/8)	8.250" (8-1/4)	12.750" (12-3/4)
1000	1.000" (1)	9.250" (9-1/4)	14.250" (14-1/4)
1125	1.125" (1-1/8)	10.250" (10-1/4)	–
1250	1.250" (1-1/4)	11.250" (11-1/4)	–
1375	1.375" (1-3/8)	12.250" (12-1/4)	–
1500	1.500" (1-1/2)	13.250" (13-1/4)	–
1750	1.750" (1-3/4)	15.250" (15-1/4)	–

FOR DETAILED SPECIFICATIONS AND TOLERANCES, VISIT HUYETT.COM.

Prices, materials, dimensions, tolerances, designs, and grades subject to change without notice. © 2016 G.L. Huyett