SMITH-COOPER® INTERNATIONAL

USA 800-766-0076
Fax 323-890-4456
www.smithcooper.com
Los Angeles, CA
Chicago, IL
Atlanta, GA
Vancouver, WA
Houston, TX

Series 0190100

Brass Boiler Drain, FIP



- 125 lb. CWP
- NPT x 3/4" NHT
- Cast brass
- Cast iron handle

Note: Product contains brass which does not meet federal and state requirements for drinking water.

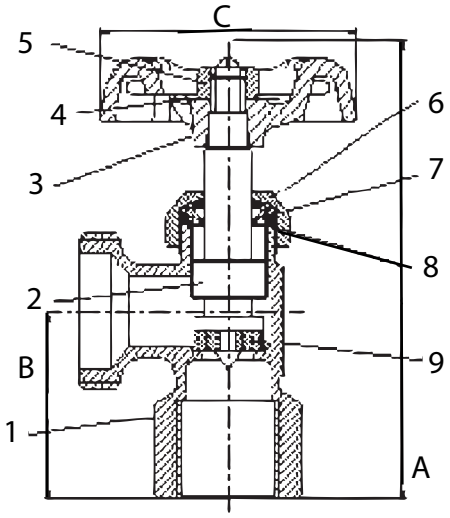

No.	Part	Material
1	Body	Cast Brass ASTM B-584, C85700
2	Stem	Cast Brass ASTM B-584, C85700
3	Handle	Cast Iron ASTM A48 Class/No. 35
4	Name Plate	Aluminium ASTM B209-1100
5	Packing Nut	Brass ASTM B-124, C37700
6	Packing Washer	Rubber (NBR)
7	Washer	Stainless Steel 304
8	Bibb Washer	Rubber (NBR)

Size IN	Part Number	Weight LB	A IN	B IN	C IN
1/2	0190100G	0.42	3.23	1.34	2.00
3/4	0190100I	0.47	3.23	1.34	2.00

SMITH-COOPER® INTERNATIONAL

USA 800-766-0076
Fax 323-890-4456
www.smithcooper.com
Los Angeles, CA
Chicago, IL
Atlanta, GA
Vancouver, WA
Houston, TX

Series 0190101

Brass Boiler Drain, MIP



- 125 lb. CWP
- NPT x 3/4" NHT
- Cast brass
- Cast iron handle

Note: Product contains brass which does not meet federal and state requirements for drinking water.

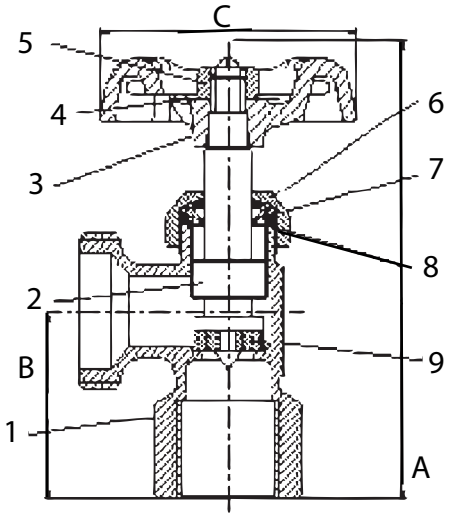

No.	Part	Material
1	Body	Cast Brass ASTM B-584, C85700
2	Stem	Cast Brass ASTM B-584, C85700
3	Handle	Cast Iron ASTM A48 Class/No. 35
4	Name Plate	Aluminium ASTM B209-1100
5	Packing Nut	Brass ASTM B-124, C37700
6	Packing Washer	Rubber (NBR)
7	Washer	Stainless Steel 304
8	Bibb Washer	Rubber (NBR)

Size IN	Part Number	Weight LB	A IN	B IN	C IN
1/2	0190101G	0.42	3.23	1.34	2.00
3/4	0190101I	0.47	3.23	1.34	2.00