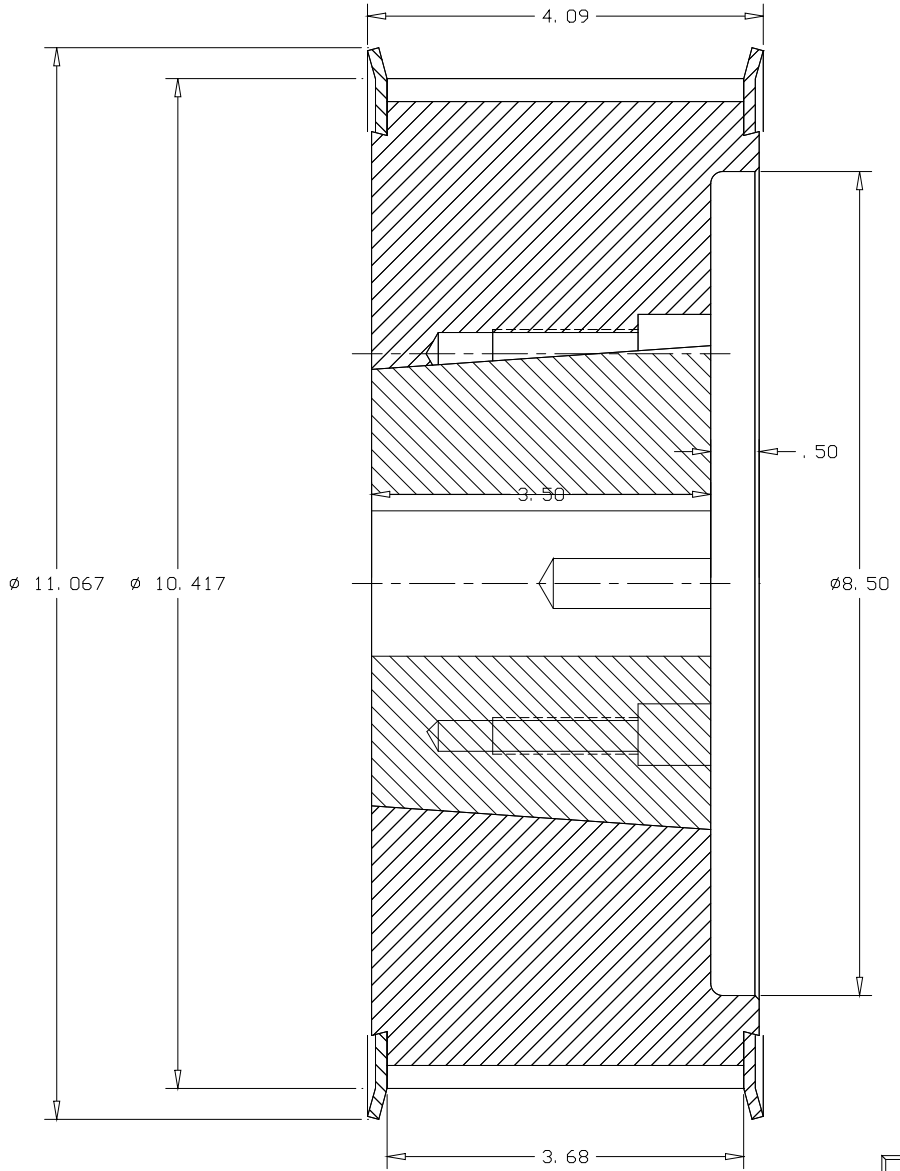

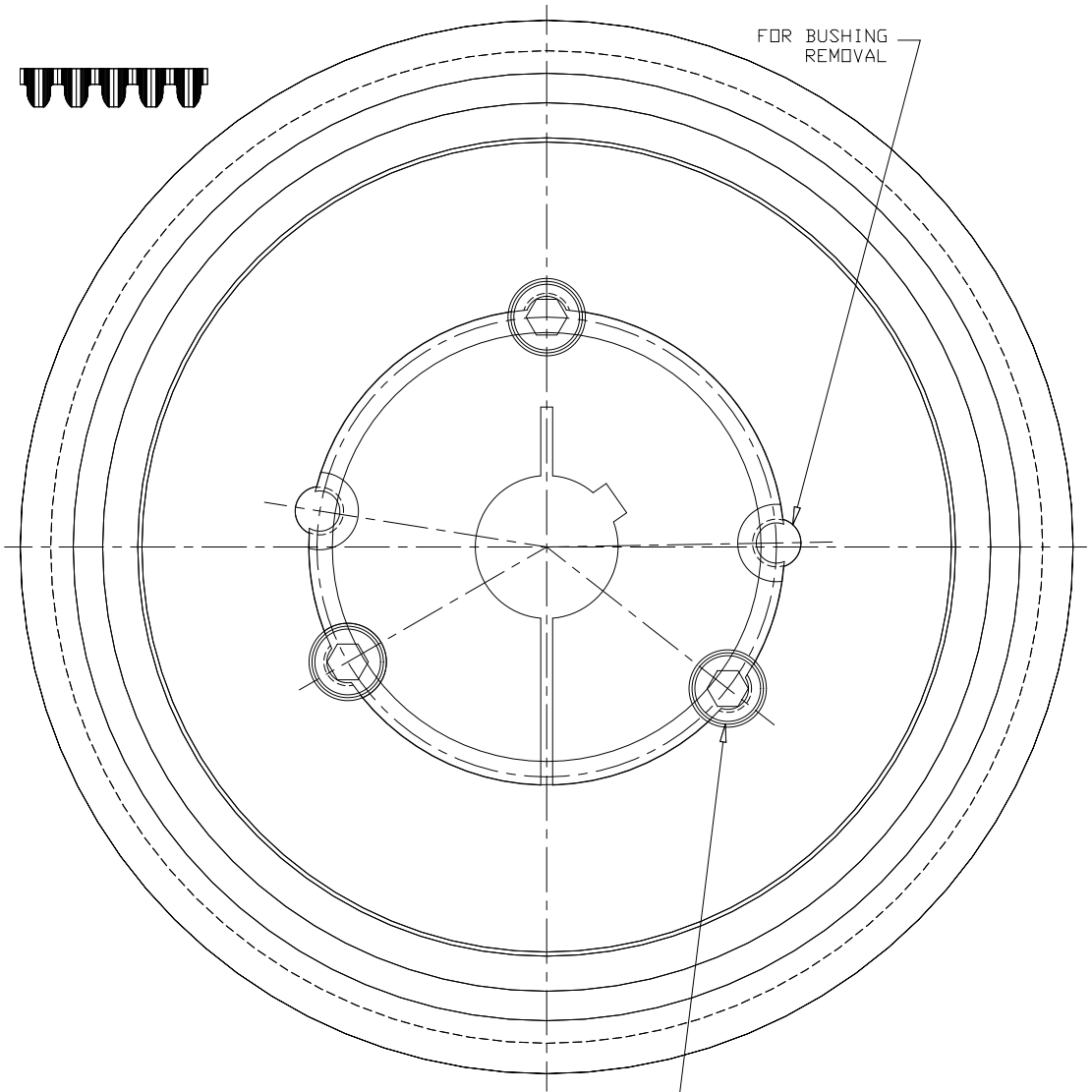

CERTIFIED

DFTR	REV	DATE	APP'D	REVISION
				SOCKET HEAD CAP SCREWS FOR BUSHING INSTALLATION

TOOTH TYPE: GT
BELT PITCH: 14M
PITCH DIA: 10.527
NO. OF TEETH: 60
MATERIAL: GRAY IRON
FINISH: 250 √
COATINGS: ANTI-RUST

THE MATERIALS AND INFORMATION, INCLUDING THE PRINCIPALS OF DESIGN PRESENTED, ARE THE EXCLUSIVE PROPERTY OF THE GATES RUBBER COMPANY AND ARE TO BE CONSIDERED AS CONFIDENTIAL INFORMATION. ACCORDINGLY, THIS INFORMATION IS SUBMITTED TO YOU WITH THE AGREEMENT THAT IT IS NOT TO BE REPRODUCED, COPIED, OR LOANED, IN PART OR IN WHOLE, NOR IS THE INFORMATION TO BE RELAYED TO ANY OTHER INDIVIDUAL OR COMPANY. ACCEPTANCE OF THIS DRAWING WILL BE CONSTRUED AS AN AGREEMENT TO THE ABOVE

PART DESCRIPTION: P60-14MGT-85 3535
GATES PART NUMBER: 77118060

THIS DRAWING IS A STOCK POWER TRANSMISSION COMPONENT. DETAILS SHOWN WHICH DO NOT AFFECT DRIVE FUNCTION MAY BE CHANGED WITHOUT ANY NOTIFICATION.

CUSTOMER NAME:
CUSTOMER DWG NO.:

APPROVED BY _____
DATE _____

REF. QUOTE NO.

THE GATES RUBBER CO.
DENVER, COLORADO

DR. BY_____ DATE _____
CK. BY_____
APPD. BY_____

DRAWING NO.
77118060