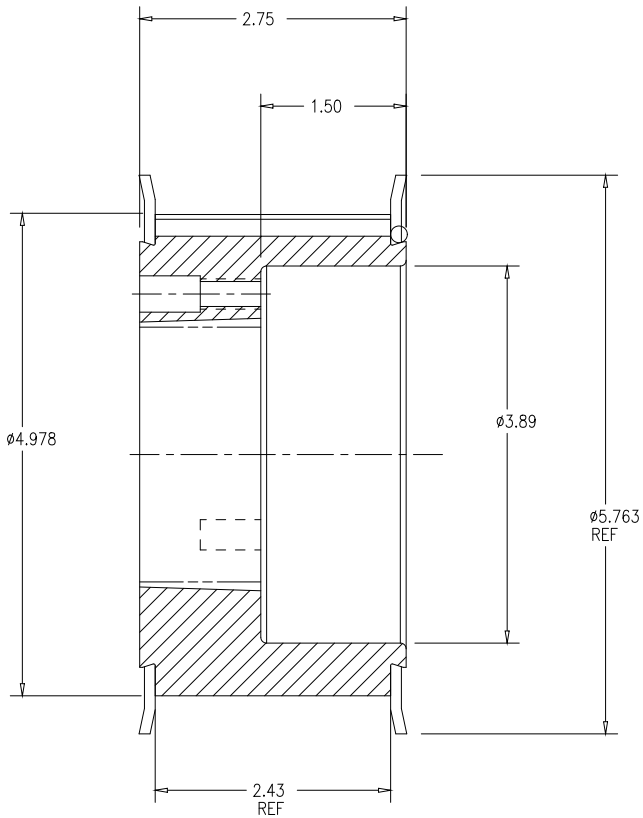


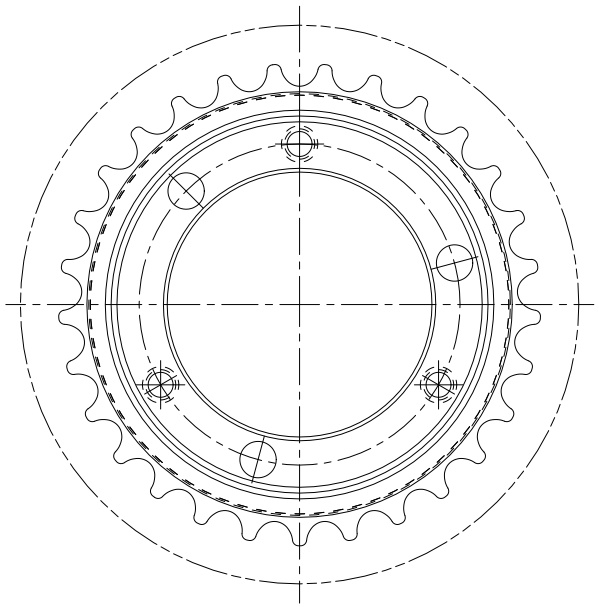

NOTES:
1. BELT PITCH: 14M.
2. NUMBER OF TEETH: 29.
3. PITCH DIAMETER: 5.088 REF.
4. MACHINED FOR A "SK" QD BUSHING.
5. ASSEMBLED WITH FLANGES.
6. APPROX. WEIGHT: 5.36 LBS.
7. MATERIAL: GRAY CAST IRON.
8. COATINGS: ANTI-RUST (ULTRAKOAT-XP)

THE MATERIALS AND INFORMATION, INCLUDING THE PRINCIPALS OF DESIGN PRESENTED, ARE THE EXCLUSIVE PROPERTY OF THE GATES RUBBER COMPANY AND ARE TO BE CONSIDERED AS CONFIDENTIAL INFORMATION. ACCORDINGLY, THIS INFORMATION IS SUBMITTED TO YOU WITH THE AGREEMENT THAT IT IS NOT TO BE REPRODUCED, COPIED, OR LOANED, IN PART OR IN WHOLE, NOR IS THE INFORMATION TO BE RELAYED TO ANY OTHER INDIVIDUAL OR COMPANY. ACCEPTANCE OF THIS DRAWING WILL BE CONSTRUED AS AN AGREEMENT TO THE ABOVE.

THIS DRAWING IS A STOCK POWER TRANSMISSION COMPONENT. DETAILS SHOWN WHICH DO NOT AFFECT DRIVE FUNCTION MAY BE CHANGED WITHOUT ANY NOTIFICATION.

| | | | |
|---|---|---|---|
| ORDER NO.: | PRODUCT: 14mm POWERGRIP GT2 QD SPRKT | APPROVED BY | DIST. |
| CUSTOMER ORDER NO.: | PART: F29-14MGT-55-SK | DATE | DAV |
| GATES CORPORATION DENVER, COLORADO | DR. BY MDW DATE 02/02/2004 CK. BY APPD. BY GEB | DRAWING NO. 77115529 | |