ITEM NO.	COMPONENT PART NO.	QTY	DESCRIPTION
1	122085	1	36S-8MGT-30 IDLER HSG
2	411630	1	3/4-16 X 3.50 HX HD SCR GR5
3	422191	2	6306 DDU C3 BRG
4	407189	2	3/4-16 HEX JAM NUT
5	469456	1	36S-8MGT- SPACER SLEEVE
6	419082	1	3/4 SAE WASHER

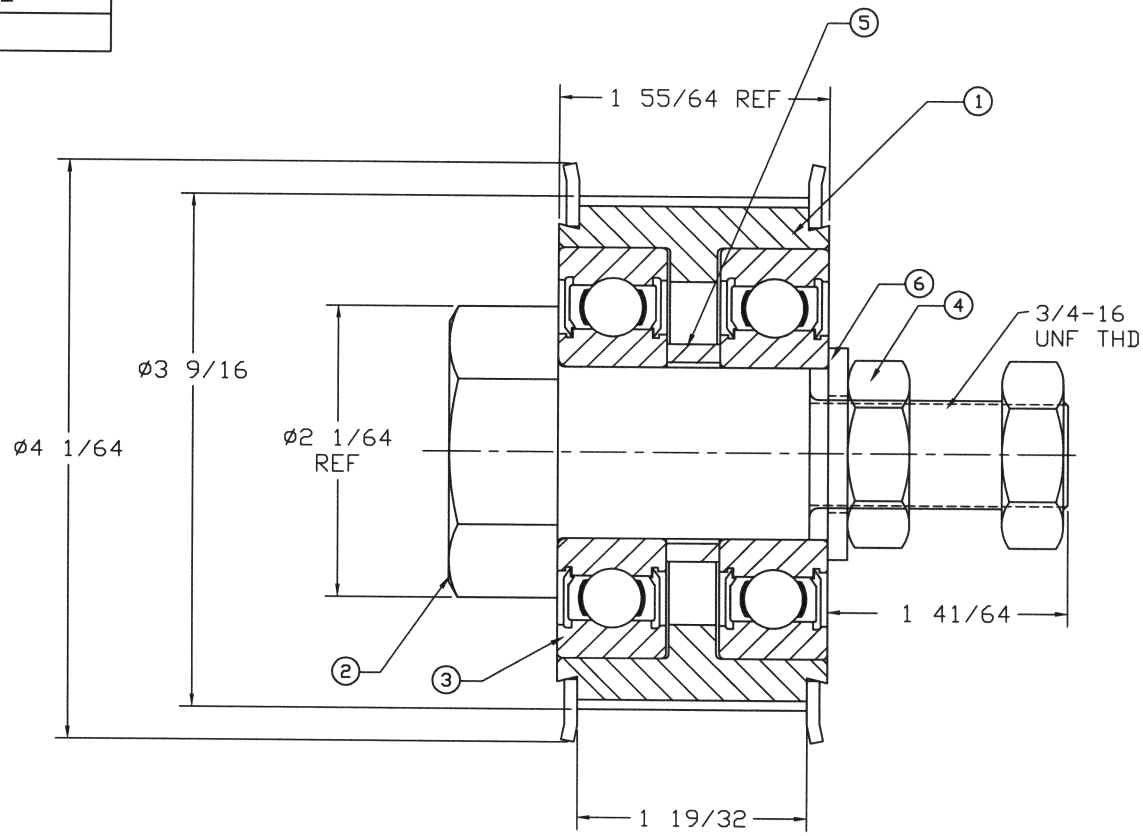

DFTR	REV	DATE	APP'D	REVISION

TOOTH TYPE: PowerGrip
BELT PITCH: 8M
PITCH DIA: 3.609
NO. OF TEETH: 36
MATERIAL: DUCTILE IRON
FINISH: 250 ✓
COATINGS: ANTI-RUST

THE MATERIALS AND INFORMATION, INCLUDING THE PRINCIPALS OF DESIGN PRESENTED, ARE THE EXCLUSIVE PROPERTY OF THE GATES RUBBER COMPANY AND ARE TO BE CONSIDERED AS CONFIDENTIAL INFORMATION. ACCORDINGLY, THIS INFORMATION IS SUBMITTED TO YOU WITH THE AGREEMENT THAT IT IS NOT TO BE REPRODUCED, COPIED, OR LOANED, IN PART OR IN WHOLE, NOR IS THE INFORMATION TO BE RELAYED TO ANY OTHER INDIVIDUAL OR COMPANY. ACCEPTANCE OF THIS DRAWING WILL BE CONSTRUED AS AN AGREEMENT TO THE ABOVE

THIS DRAWING IS A STOCK POWER TRANSMISSION COMPONENT. DETAILS SHOWN WHICH DO NOT AFFECT DRIVE FUNCTION MAY BE CHANGED WITHOUT ANY NOTIFICATION.

CUSTOMER NAME:

CUSTOMER DWG NO.:

THE GATES RUBBER CO.
DENVER, COLORADO

PART DESCRIPTION: 36S-8MGT- IDLER SPKT
GATES PART NUMBER: 77201750

APPROVED BY _____
DATE _____

REF. QUOTE NO.

DR. BY CMH DATE 01/13/05
CK. BY _____
APPD. BY GEB

DRAWING NO. 77201750