ITEM NO.	COMPONENT PART NO.	QTY	DESCRIPTION
1	122084	1	32S-8MGT-20 IDLER HSG
2	411157	1	3/4-16 X 3.38 HX HD SCR GR5
3	422190	2	6304 DDU C3 BRG
4	407189	2	3/4-16 HEX JAM NUT
5	469455	1	32S-8MGT SPACER SLEEVE

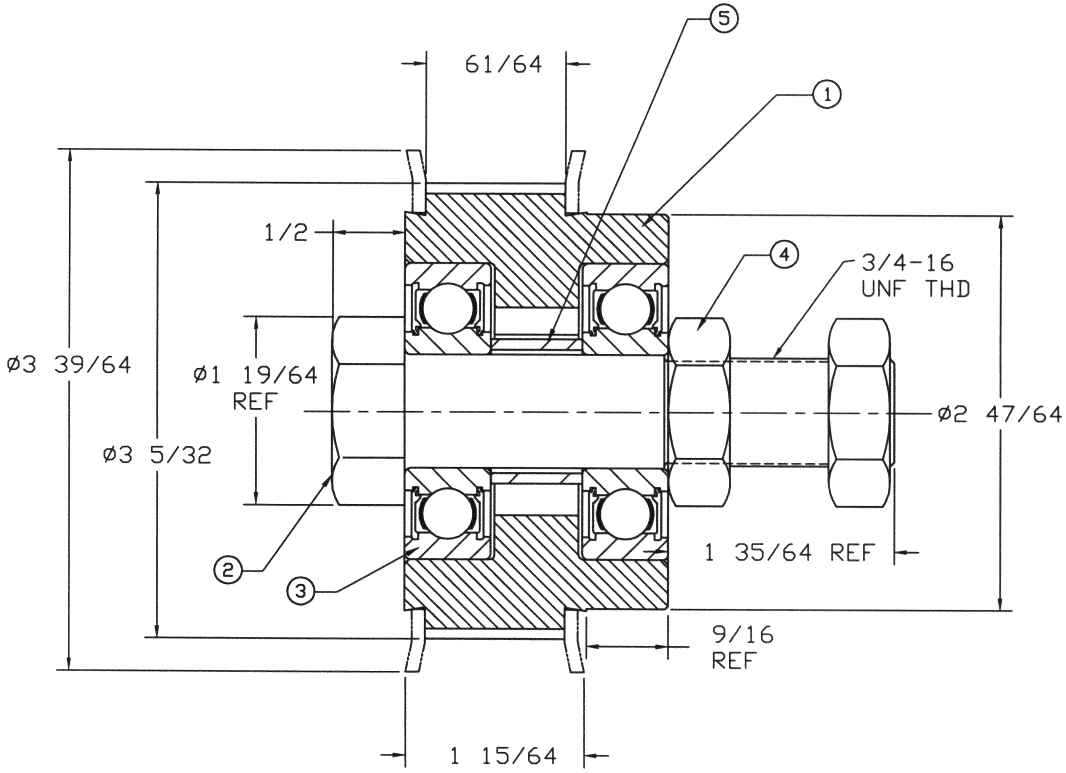

DFTR	REV	DATE	APP'D	REVISION

TOOTH TYPE: PowerGrip
BELT PITCH: 8M
PITCH DIA: 3.208
NO. OF TEETH: 32
MATERIAL: DUCTILE IRON
FINISH: 250 ✓
COATINGS: ANTI-RUST

THE MATERIALS AND INFORMATION, INCLUDING THE PRINCIPALS OF DESIGN PRESENTED, ARE THE EXCLUSIVE PROPERTY OF THE GATES RUBBER COMPANY AND ARE TO BE CONSIDERED AS CONFIDENTIAL INFORMATION. ACCORDINGLY, THIS INFORMATION IS SUBMITTED TO YOU WITH THE AGREEMENT THAT IT IS NOT TO BE REPRODUCED, COPIED, OR LOANED, IN PART OR IN WHOLE, NOR IS THE INFORMATION TO BE RELAYED TO ANY OTHER INDIVIDUAL OR COMPANY. ACCEPTANCE OF THIS DRAWING WILL BE CONSTRUED AS AN AGREEMENT TO THE ABOVE

PART DESCRIPTION: 32S-8MGT-20 IDLER SPKT
GATES PART NUMBER: 77201740

THIS DRAWING IS A STOCK POWER TRANSMISSION COMPONENT. DETAILS SHOWN WHICH DO NOT AFFECT DRIVE FUNCTION MAY BE CHANGED WITHOUT ANY NOTIFICATION.

CUSTOMER NAME:
CUSTOMER DWG NO.:

APPROVED BY _____
DATE _____

REF. QUOTE NO.

THE GATES RUBBER CO.
DENVER, COLORADO

DR. BY EWR DATE 01-06-05
CK. BY _____
APPD. BY GEB

DRAWING NO.
77201740