SELECTION/DIMENSIONS

D-LOK® Ball Bearings
DLM MEDIUM DUTY 2-BOLT FLANGE BEARINGS

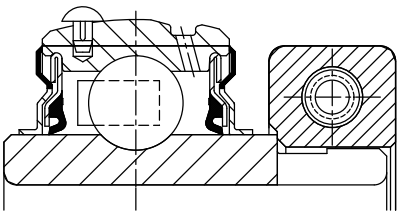

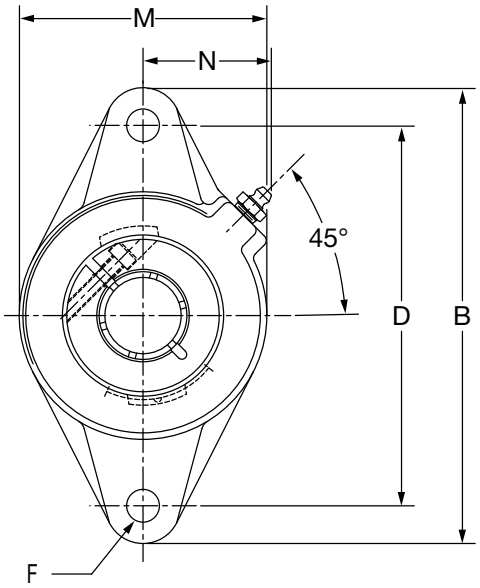

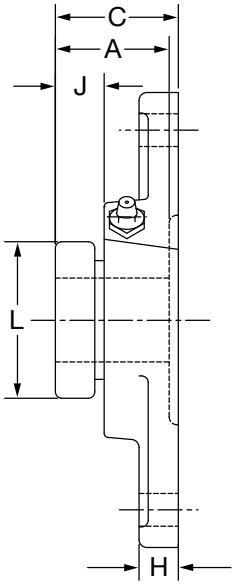

Series	Shaft Size	Part No.	Description
206	1	**128835**	F2B-DLM-100
207	1-3/16	**128836**	F2B-DLM-103
	1-1/4	**128764**	F2B-DL-104
208	1-7/16	**128837**	F2B-DLM-107
	35mm	***126641***	*F2B-DLM-35M*
209	1-1/2	**128838**	F2B-DLM-108
210	1-11/16	**128839**	F2B-DLM-111
	1-3/4	**128840**	F2B-DLM-112
211	1-15/16	**128841**	F2B-DLM-115
	2	**128842**	F2B-DLM-200

Series	Shaft Size	Weight lbs *kg*	A	B	C	D	F Bolt Dia.	H	J	L	M	N
206	1	2.6	1.75	6.13	1.79	5.12	1/2	0.56	0.57	2.69	3.75	1.84
			44.5	155.7	45.5	130.0	M10	14.2	14.5	68.3	95.3	46.7
207	1-3/16	3.7	2.01	6.75	2.05	5.66	1/2	0.56	0.7	2.74	4.13	1.83
	1-1/4	3.5	51.1	171.5	52.1	143.8	M12	14.2	17.8	69.6	104.9	46.5
208	1-7/16	5.0	2.01	7.06	2.06	5.84	1/2	0.63	0.66	2.99	4.38	1.91
	35mm	*2.2*	*51.1*	*179.3*	*52.3*	*148.3*	*M14*	*16.0*	*16.8*	*75.9*	*111.3*	*48.5*
209	1-1/2	5.6	2.01	7.44	2.1	6.19	1/2	0.63	0.63	3.24	4.56	2.03
			51.1	189.0	53.3	157.2	M16	16.0	16.0	82.3	115.8	51.6
210	1-11/16	6.2	2.25	8.63	2.3	7.25	5/8	0.67	0.71	3.69	5.25	2.27
	1-3/4	6.1	57.2	219.2	58.4	184.2	M16	17.0	18.0	93.7	133.4	57.7
211	1-15/16	9.2	2.01	7.06	2.06	5.84	1/2	0.63	0.66	2.99	4.38	1.91
	2	9.1	51.1	179.3	52.3	148.3	M14	16.0	16.8	75.9	111.3	48.5