FEATURES/BENEFITS

Eccentric SXV Collar

- Eccentric Locking Collar
- Narrow Inner Ring Design
- Fiberglass Reinforced Nylon Cage
- Grade 10 Balls
- Proguard Single Lip Seal
- No Groove in Housing for End Cover
- Multiple Housing Styles Available
  P2B, F2B, F4B, WSTU, NSTU
- Bore Range
  1/2” to 2-3/16”
  20mm to 55mm

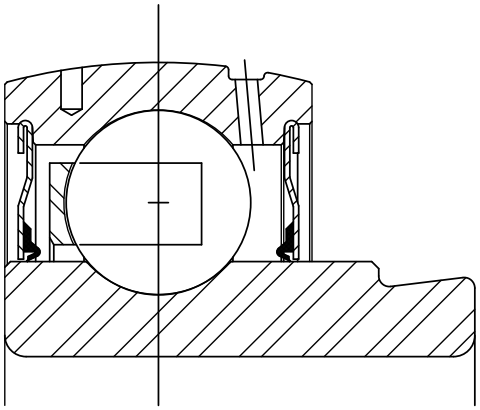

Note: Instruction manuals and drawings for Dodge bearings are available on www.dodge-pt.com