SELECTION/DIMENSIONS

E-Z KLEEN Mounted Bearings

GTEZ NORMAL DUTY POLYMER HOUSED WIDE SLOT TAKE-UP BEARINGS

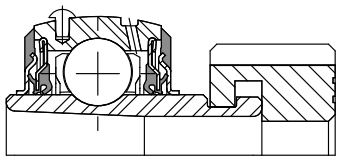

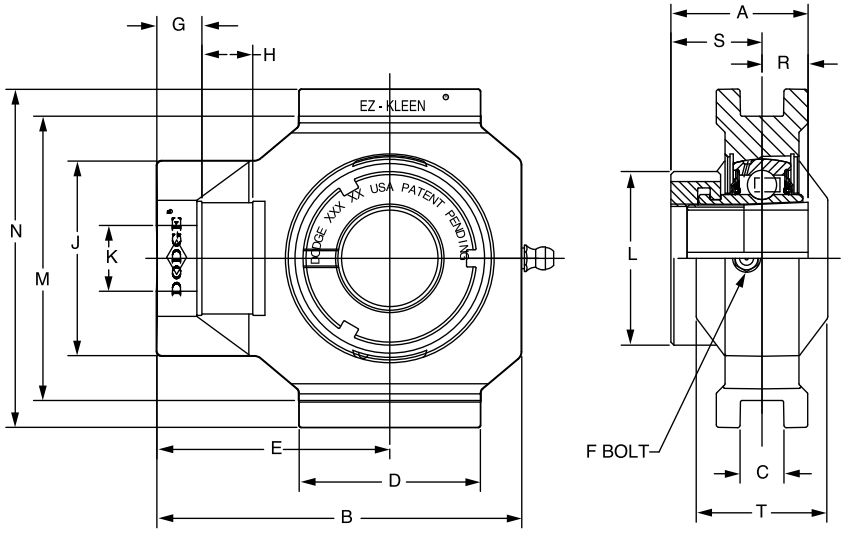

Series	Shaft Size	With Corrosion Resistant Insert		Unit without Adapter & Nut		Adapter & Nut Assembly	
		Part No.	Description	Part No.	Description	Part No.	Description
204	3/4	**136315**	WSTU-GTEZ-012-PCR	**136327**	WSTU-GTEZ-04-PCR	**129967**	AN-GT-04-012-CR
	20mm	***136323***	*WSTU-GTEZ-20M-PCR*			***129980***	*AN-GT-04-20M-CR*
205	1	**136316**	WSTU-GTEZ-100-PCR	**136328**	WSTU-GTEZ-05-PCR	**129968**	AN-GT-05-100-CR
	25mm	***136324***	*WSTU-GTEZ-25M-PCR*			***129981***	*AN-GT-05-25M-CR*
206	1-1/8	**136317**	WSTU-GTEZ-102-PCR	**136329**	WSTU-GTEZ-06-PCR	**129969**	AN-GT-06-102-CR
	1-3/16	**136318**	WSTU-GTEZ-103-PCR			**129970**	AN-GT-06-103-CR
	1-1/4	**136319**	WSTU-GTEZ-104S-PCR			**129971**	AN-GT-06-104S-CR
	30mm	***136325***	*WSTU-GTEZ-30M-PCR*			***129982***	*AN-GT-06-30M-CR*
207	1-1/4	**136320**	WSTU-GTEZ-104-PCR	**136330**	WSTU-GTEZ-07-PCR	**129972**	AN-GT-07-104-CR
	1-3/8	**136321**	WSTU-GTEZ-106-PCR			**129973**	AN-GT-07-106-CR
	1-7/16	**136322**	WSTU-GTEZ-107-PCR			**129974**	AN-GT-07-107-CR
	35mm	***136326***	*WSTU-GTEZ-35M-PCR*			***129983***	*AN-GT-07-35M-CR*

DODGE®



E-Z KLEEN Mounted Bearings

GTEZ NORMAL DUTY POLYMER HOUSED WIDE SLOT TAKE-UP BEARINGS

Series	Shaft Size	Weight lbs kg	Take-Up Frame No. Ref.	A	B	C	D	E	F Thd Shaft	G	H
204	3/4	0.90	WS300	1.48	3.81	0.530	2.10	2.50	5/8	0.56	0.65
	20mm	*0.40*		*37.6*	*96.8*	*13.46*	*53.3*	*63.5*	*15.9*	*14.2*	*16.5*
205	1	1.20	WS300	1.46	3.97	0.530	2.20	2.56	5/8	0.56	0.65
	25mm	*0.50*		*37.1*	*100.8*	*13.46*	*55.9*	*65.0*	*15.9*	*14.2*	*16.5*
206	1-1/8	1.80	WS308	1.61	4.49	0.530	2.29	2.86	3/4	0.56	0.65
	1-3/16	1.70									
	1-1/4	1.60									
	30mm	*0.80*		*40.9*	*114.0*	*13.46*	*58.2*	*72.6*	*19.1*	*14.2*	*16.5*
207	1-1/4	2.40	WS308	1.62	4.99	0.530	2.25	3.10	3/4	0.56	0.65
	1-3/8	2.30									
	1-7/16	2.30									
	35mm	*1.08*		*41.1*	*126.7*	*13.46*	*57.2*	*78.7*	*19.1*	*14.2*	*16.5*

Series	Shaft Size	J	K	L	M	N	R	S	T	Z
204	3/4	2.10	0.71	1.50	3.015/2.985	3.63	0.46	1.02	1.38	1.73
	20mm	*53.3*	*18.0*	*38.1*	*76.58/75.82*	*92.2*	*11.7*	*25.9*	*35.1*	*43.9*
205	1	2.12	0.71	1.80	3.030/3.000	3.63	0.48	0.98	1.38	1.72
	25mm	*53.8*	*18.0*	*45.7*	*76.96/76.20*	*92.2*	*12.2*	*24.9*	*35.1*	*43.7*
206	1-1/8	2.41	0.81	2.08	3.525/3.495	4.20	0.52	1.09	1.62	1.88
	1-3/16									
	1-1/4									
	30mm	*61.2*	*20.6*	*52.8*	*89.54/88.77*	*106.7*	*13.2*	*27.7*	*41.1*	*47.8*
207	1-1/4	2.41	0.81	2.38	3.540/3.510	4.20	0.54	1.08	1.62	1.92
	1-3/8									
	1-7/16									
	35mm	*61.2*	*20.6*	*60.5*	*89.93/89.15*	*106.7*	*13.7*	*27.4*	*41.1*	*48.8*

FEATURES/BENEFITS PAGE B2-3	HOW TO ORDER/NOMENCLATURE PAGE B2-8	SELECTION/DIMENSIONS PAGE B2-24	ACCESSORIES PAGE B2-77