

E-Z KLEEN/ULTRA KLEEN Mounted Bearings
Polymer and Stainless Steel Housed Mounted Bearings
END CLOSURES

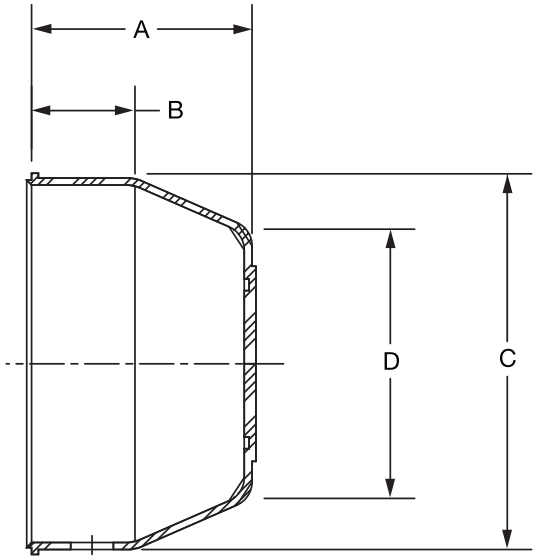

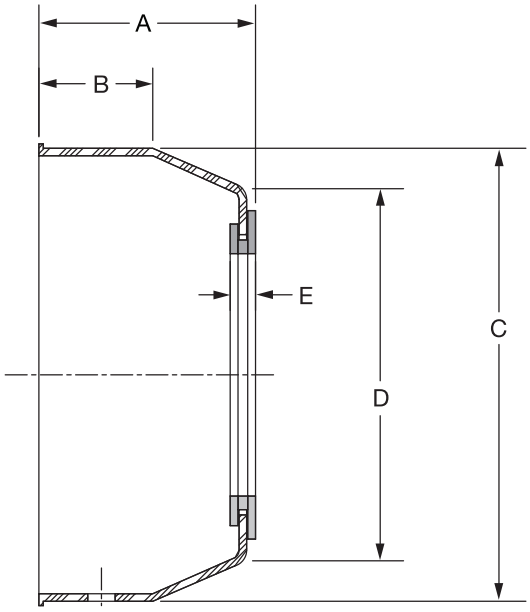

Series	For Shaft Size	Closed End Closure Part Number	Description	A	B	C	D	Open End Closure Part Number	Description	A	B	C	D	E
204	3/4	**128960**	ECC-EZ-204	1.13	0.53	1-29/32	1-3/8	**128974**	ECO-EZ-012	1-3/16	17/32	1-29/32	1-3/8	3/16
	20mm			*28.7*	*13.5*	*48.4*	*35.1*	***128991***	*ECO-EZ-20M*	*30.2*	*13.5*	*48.4*	*35.1*	*4.9*
205	1	**128961**	ECC-EZ-205	0.19	17/32	2-11/64	1-39/64	**128975**	ECO-EZ-100	1-1/4	17/32	2-11/64	1-39/64	3/16
	25mm			*30.2*	*13.5*	*55.1*	*40.9*	***128992***	*ECO-EZ-25M*	*35.3*	*14.2*	*63.5*	*50.0*	*4.9*
206	1-3/16 1-1/4	**128962**	ECC-EZ-206	1.33	9/16	2-1/2	31/32	**128976** **128989**	ECO-EZ-103 ECO-EZ-104S	1-25/64	9/16	2-1/2	31/32	3/16
	30mm			*33.8*	*14.2*	*63.5*	*50.0*	***128993***	*ECO-EZ-30M*	*35.3*	*14.2*	*63.5*	*50.0*	*4.9*
207	1-1/4 1-7/16	**128963**	ECC-EZ-207	1.47	11/16	2-29/32	2-5/16	**128977** **128990**	ECO-EZ-104 ECO-EZ-107	1-17/32	11/16	2-29/32	2-5/16	3/16
	35mm			*37.3*	*17.5*	*73.9*	*58.9*	***128994***	*ECO-EZ-35M*	*38.9*	*17.5*	*73.9*	*58.9*	*4.9*
208	1-1/2	**128964**	ECC-EZ-208	1.55	11/16	3-5/16	2-49/64	**128978**	ECO-EZ-108	1-19/32	11/16	3-5/16	2-49/64	13/64
	40mm			*39.1*	*17.5*	*84.1*	*70.1*	***128996***	*ECO-EZ-40M*	*40.6*	*17.5*	*84.1*	*70.1*	*5.1*
209	1-11/16 1-3/4	**128965**	ECC-EZ-209	1.59	23/32	3-1/2	2-7/8	**@**	ECO-EZ-111	1-21/32	23/32	3-1/2	2-7/8	13/64
	45mm			*40.4*	*18.3*	*88.9*	*72.9*	*@*	*ECO-EZ-45M*	*41.9*	*18.3*	*88.9*	*72.9*	*5.1*
210	1-15/16 2	**128966**	ECC-EZ-210	1.66	29/32	3-5/8	3	**128980**	ECO-EZ-115	1-23/32	29/32	3-5/8	3	13/64
	50mm			*42.0*	*23.1*	*91.4*	*76.2*	***128997***	*ECO-EZ-50M*	*43.7*	*23.1*	*91.4*	*76.2*	*5.1*

@ Made to order

FEATURES/BENEFITS PAGE B1-3	HOW TO ORDER/NOMENCLATURE PAGE B1-6	EASY SELECTION PAGE B1-6	DIMENSIONS PAGE B1-16