SELECTION/DIMENSIONS

Setscrew Ball Bearings
SCAH AND SCUAH AIR HANDLING NORMAL DUTY PILLOW BLOCKS

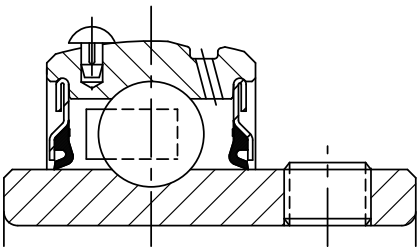

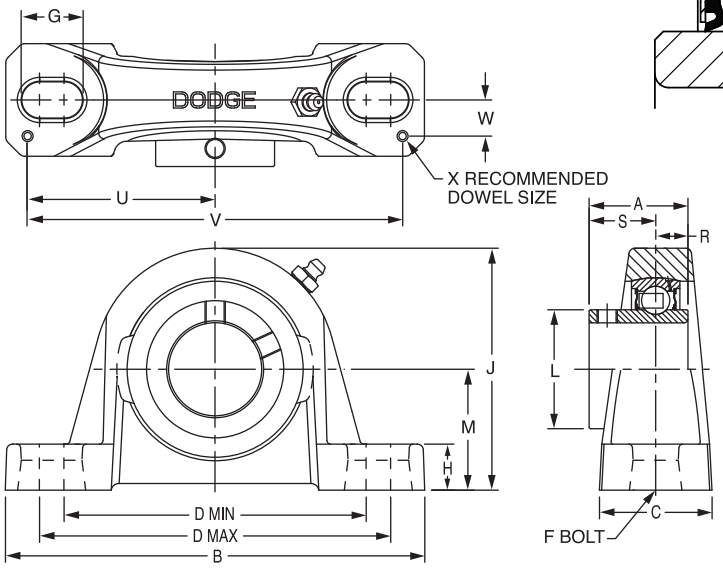

Lube Fitting
203 series - 1/4-28 tapered thread
204 series and larger - 1/8-27 NPT

Series	Shaft Size	Part No.	Description
208	1-1/2	**123909**	P2B-SCAH-108
	1-5/8	**056750**	P2B-SCAH-110
	40mm	***073992***	*P2B-SCAH-40M*
209	1-5/8	**064689**	P2B-SCAH-110L
	1-11/16	**123910**	P2B-SCAH-111
	1-3/4	**123911**	P2B-SCAH-112
	45mm	***052413***	*P2B-SCAH-45M*
210	1-15/16	**123912**	P2B-SCAH-115
	2	**@**	P2B-SCAH-200
	50mm	***052414***	*P2B-SCAH-50M*
211	2	**126847**	P2B-SCMAH-200
	2-3/16	**123913**	P2B-SCAH-203
	2-1/4	**@**	P2B-SCAH-204
	55mm	***@***	*P2B-SCAH-55M*
212	2-1/4	**@**	P2B-SCMAH-204
	2-7/16	**123914**	P2B-SCAH-207
	60mm	***054009***	*P2B-SCAH-60M*
214	2-1/2	**@**	P2B-SCMAH-208
	2-11/16	**124872**	P2B-SCAH-211
	70mm	***@***	*P2B-SCAH-70M*
215	2-15/16	**123915**	P2B-SCAH-215
	75mm	***@***	*P2B-SCAH-75M*
215 *(SCU)*	2-15/16	**@**	P2B-SCUAH-215
	75mm	***@***	*P2B-SCUAH-75M*

@ Assembled to order

DODGE®



Setscrew Ball Bearings
SCAH AND SCUAH AIR HANDLING NORMAL DUTY PILLOW BLOCKS

Series	Shaft Size	Wgt. lbs kgs.	A	B	C	D Min	D Max	F Bolt Dia.	G	H	J	L	M	R	S	U	V	W	X
208	1-1/2	5.4	1.94	7.25	1.93	5.18	5.88	1/2	0.91	0.93	4.19	2.05	2.13	0.75	1.19	3.26	6.52	0.69	0.12
	1-5/8	5.3																	
	40mm	*2.2*	*49.3*	*184.2*	*49.0*	*131.6*	*149.4*	*M12*	*23.1*	*23.6*	*106.4*	*52.1*	*54.0*	*19.1*	*30.2*	*82.8*	*165.6*	*17.5*	*3.0*
209	1-5/8	6.6	1.94	7.44	2.00	5.50	6.19	1/2	0.90	0.75	4.28	2.22	2.13	0.75	1.19	3.38	6.76	0.69	0.12
	1-11/16	6.4																	
	1-3/4	6.2																	
	45mm	*2.2*	*49.3*	*189.0*	*50.8*	*139.7*	*157.2*	*M12*	*22.9*	*19.1*	*108.7*	*56.4*	*54.0*	*19.1*	*30.2*	*85.9*	*171.7*	*17.5*	*3.0*
210	1-15/16	7.2	1.94	8.12	2.25	6.00	6.68	5/8	1.02	0.75	4.53	2.43	2.25	0.75	1.19	3.69	7.38	0.81	0.12
	2	7.0																	
	50mm	*2.6*	*49.3*	*206.2*	*57.2*	*152.4*	*169.7*	*M16*	*25.9*	*19.1*	*115.1*	*61.7*	*57.2*	*19.1*	*30.2*	*93.7*	*187.5*	*20.6*	*3.0*
211	2	9.0	2.22	8.88	2.30	6.38	7.44	5/8	1.21	0.88	4.96	2.71	2.50	0.87	1.35	3.94	7.88	0.81	0.12
	2-3/16	8.9																	
	2-1/4	8.8																	
	55mm	*3.3*	*56.4*	*225.6*	*58.4*	*162.1*	*189.0*	*M16*	*30.7*	*22.4*	*126.0*	*68.8*	*63.5*	*22.1*	*34.3*	*100.1*	*200.2*	*20.6*	*3.0*
212	2-1/4	10.8	2.31	9.50	2.37	6.88	7.94	5/8	1.21	0.88	5.40	2.97	2.75	0.90	1.41	4.25	8.50	0.88	0.12
	2-7/16	10.2																	
	60mm	*4.2*	*58.7*	*241.3*	*60.2*	*174.8*	*201.7*	*M16*	*30.7*	*22.4*	*137.2*	*75.4*	*69.9*	*22.9*	*35.8*	*108.0*	*215.9*	*22.4*	*3.0*
214	2-1/2	15.5	2.54	10.75	2.69	7.50	8.50	3/4	1.32	0.94	6.09	3.31	3.00	1.06	1.48	4.88	9.76	0.94	0.12
	2-11/16	1.50																	
	70mm	*6.9*	*64.5*	*273.1*	*68.3*	*190.5*	*215.9*	*M18*	*33.5*	*23.9*	*154.7*	*84.1*	*76.2*	*26.9*	*37.6*	*124.0*	*247.9*	*23.9*	*3.0*
215	2-15/16	20.5	2.33	11.75	2.88	8.50	9.50	7/8	1.44	1.00	6.75	3.62	3.50	0.86	1.47	5.48	10.96	1.04	0.12
	75mm	*7.9*	*59.2*	*298.5*	*73.2*	*215.9*	*241.3*	*M22*	*36.6*	*25.4*	*171.5*	*91.9*	*88.9*	*21.8*	*37.3*	*139.2*	*278.4*	*26.4*	*3.0*
215 SCU	2-15/16	20.7	2.33	11.75	2.88	8.50	9.50	7/8	1.44	1.00	6.50	3.62	3.25	0.86	1.47	5.48	10.96	1.04	0.12
	75mm	*8.0*	*59.2*	*298.5*	*73.2*	*215.9*	*241.3*	*M22*	*36.6*	*25.4*	*165.1*	*91.9*	*82.6*	*21.8*	*37.3*	*139.2*	*278.4*	*26.4*	*3.0*

FEATURES/BENEFITS PAGE B4-3	HOW TO ORDER/NOMENCLATURE PAGE B4-5	SELECTION PAGE B4-6	ACCESSORIES PAGE B4-98