SELECTION/DIMENSIONS



SLEEVOIL - R Series

9”, 10”, 12” XC SLEEVOIL PILLOW BLOCKS

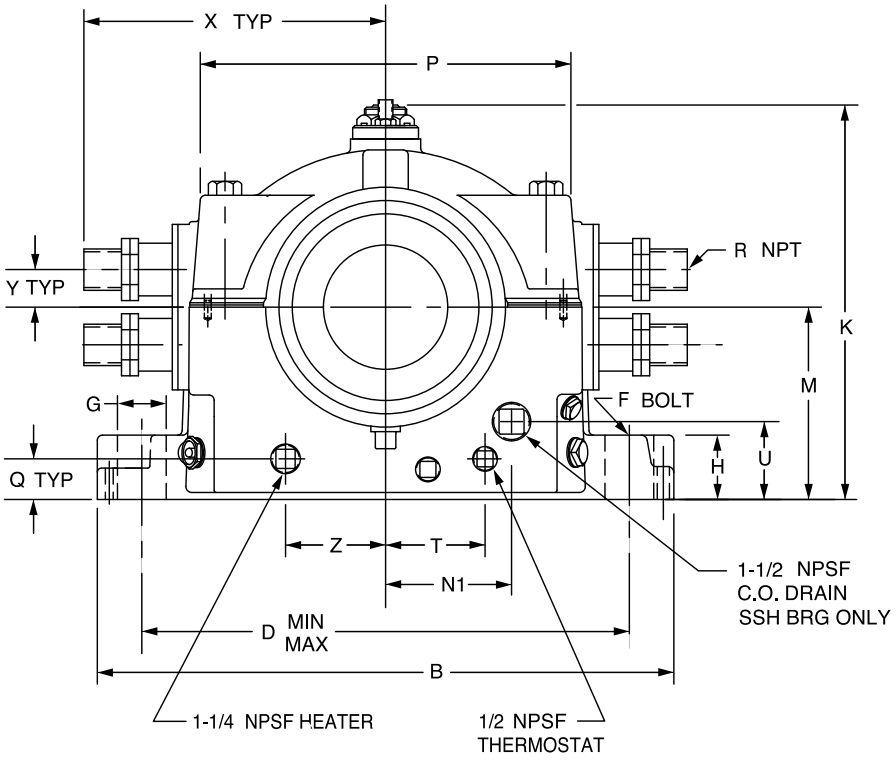

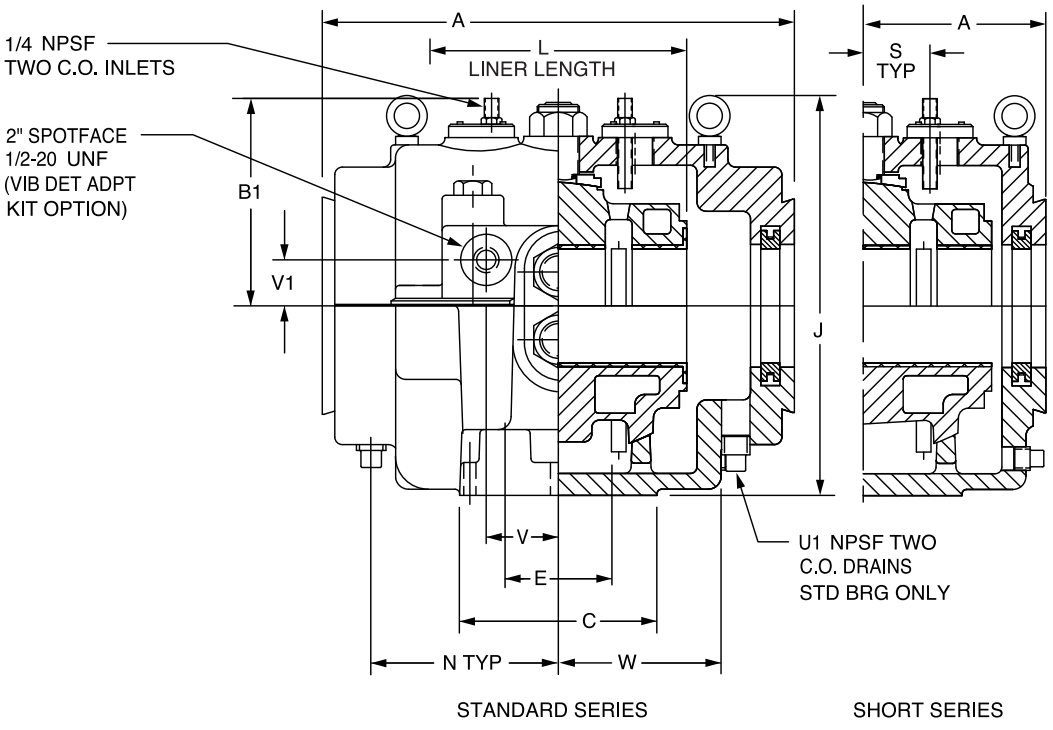

FEATURES/BENEFITS PAGE B18-3	HOW TO ORDER/NOMENCLATURE PAGE B18-7	SELECTION PAGE B18-8	ACCESSORIES PAGE B18-22



SELECTION/DIMENSIONS

SLEEVOIL - R Series

9", 10", 12" XC SLEEVOIL PILLOW BLOCKS

Shaft Size	Expansion Pillow Blocks XC (Externally Cooled) (Short Series Expansion Only)				2 Collars Required To Make A Non-Expansion STL Pillow Block	
	STL-XC		SSL-XC		XC Split Thrust Collars	
	Part No.	Wt.	Part No.	Wt.	Part No.	Wt.
9	**132538 ⊗**	1600	**133565 ⊗**	1500	**133303**	57
10	**132539 ⊗**	2000	**133566 ⊗**	1750	**133304**	74
12	**132559 x**	3300	**....**	....	**133305**	....

Shaft Size	Auxiliary Seal Kits ##		Housing End Cap Kits		Heater / Thermostat * XC 120 Volt		Circulating Oil Inlet Kits >		Neoprene End Closure ##		Liner Assemblies XC	
	Part No.	Wt.	Part No.	Wt.	Part No.	Wt.	Part No.	Wt.	Part No.	Wt.	Part No.	Wt.
9	**132814**	23.1	**132564**	15.9	**434729**	4.0	**430155**	2	**133996**	1.5	**132591**	300
10	**132816**	24.2	**132565**	16.4	**434729**	4.0	**430155**	2	**133995**	1.6	**132594**	400
12	**132819**	40.0	**132566**	25.0	**434729**	....	**....**	....	**133997**	1.9	**132597**	600

Shaft Size	A		B		C		D (Min.-Max.)		E	
	STL	SSL	STL	SSL	STL	SSL	STL	SSL	STL	SSL
9	29	22-1/4	37	37	15-1/2	15-1/2	28-3/8 - 31-5/8	28-3/8 - 31-5/8	8	8
10	30	23-1/4	40	40	17	17	31-1/4 - 34-3/4	31-1/4 - 34-3/4	9	9
12	34	...	46		18	...	36-5/8 - 40-3/8	....	10	....

Shaft Size	F-Bolt		G		H		J		K		L	M
	STL	SSL	STL	SSL	STL	SSL	STL	SSL	STL	SSL	XC	STL & SSL
9	1-3/4	1-3/4	3-1/2	3-1/2	6	6	26-13/16	26-3/4	25-1/2	25-1/2	17	12
10	2	2	4	4	6-3/4	6-3/4	29-5/16	29-1/4	28-1/4	28-1/4	18	13-1/2
12	2	....	4-1/8	....	7	7	34-3/4	29-5/16	33-1/16	....	20	16

Shaft Size	N	N1	P		Q	R Pipe	S	T	U	U1	V	V1
	STL	SSL	STL	SSL	STL & SSL	XC	STL & SSL	STL & SSL	SSL	STL	STL & SSL	STL & SSL
9	11-7/8	5-3/4	21-3/4	21-3/4	2-1/2	1-1/4	3-3/8	6-3/8	5-1/8	1-1/2	5	1-1/2
10	12-3/8	5-1/2	23-3/4	23-3/4	3	1-1/2	3-1/2	7	6-1/8	1-1/2	7	2
12	....	....	28-3/4	....	....	2	....	....	....	....	....	....

Shaft Size	W		X	Y	Z	B1	
	STL	SSL	XC	XC	STL & SSL	STL	SSL
9	10-5/8	10-5/8	16-1/4	2-1/4	6-3/8	13-5/8	13-5/8
10	11	11	17-1/2	2-5/8	7	14-1/2	14-1/2
12	12-1/16	....	20-1/4	....	....	....	....

One required per pillow block end

> One required per pillow block

⊗ All housings are pre-machined for accessories; thermocouples, circulating oil vibration detector, heater and thermostat

x Assembled-to-order, Not "L" version

* 220 volt heaters available. See page B18-26.