# SELECTION/DIMENSIONS

## Setscrew VSC Ball Bearings
### VSC INTERMEDIATE DUTY WIDE SLOT TAKE-UP BEARINGS

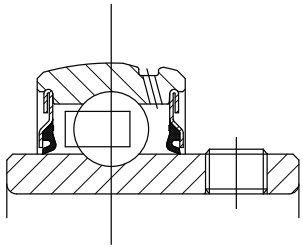

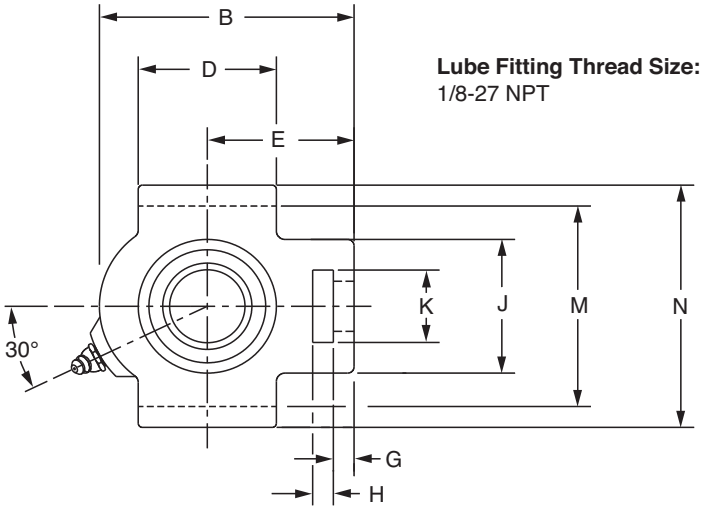


**Lube Fitting Thread Size:**
1/8-27 NPT

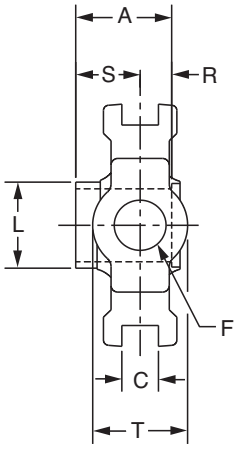


| Series | Shaft Size | Part No. | Description |
|---|---|---|---|
| 204 | 3/4 | **125549** | WSTU-VSC-012 |
| | *20mm* | **@** | *WSTU-VSC-20M* |
| 205 | 7/8 | **125550** | WSTU-VSC-014 |
| | 15/16 | **125551** | WSTU-VSC-015 |
| | 1 | **125552** | WSTU-VSC-100 |
| | *25mm* | **@** | *WSTU-VSC-25M* |
| 206 | 1-1/8 | **125553** | WSTU-VSC-102 |
| | 1-3/16 | **125554** | WSTU-VSC-103 |
| | 1-1/4 | **125556** | WSTU-VSC-104S |
| | *30mm* | **@** | *WSTU-VSC-30M* |
| 207 | 1-1/4 | **125555** | WSTU-VSC-104 |
| | 1-3/8 | **125557** | WSTU-VSC-106 |
| | 1-7/16 | **125558** | WSTU-VSC-107 |
| | *35mm* | **@** | *WSTU-VSC-35M* |

@ Assembled to order



# Setscrew VSC Ball Bearings

## VSC INTERMEDIATE DUTY WIDE SLOT TAKE-UP BEARINGS

| Series | Shaft Size | Weight lbs. kg. | Take-Up Frame No. Ref. | A | B | C | D | E | F Screw Dia. | G |
|---|---|---|---|---|---|---|---|---|---|---|
| 204 | 3/4 | 1.9 | WS300 | 1.23 | 3.69 | 0.531 | 2.00 | 2.38 | 5/8 | 0.38 |
| | *20mm* | *0.87* | | *31.2* | *93.7* | *13.49* | *50.8* | *60.5* | *15.9* | *9.7* |
| 205 | 7/8 | 2.2 | WS300 | 1.34 | 3.81 | 0.531 | 2.00 | 2.44 | 5/8 | 0.38 |
| | 15/16 | 2.1 | | | | | | | | |
| | 1 | 2.0 | | | | | | | | |
| | *25mm* | *0.96* | | *34.0* | *96.8* | *13.49* | *50.8* | *62.0* | *15.9* | *9.7* |
| 206 | 1-1/8 | 3.0 | WS308 | 1.52 | 4.38 | 0.531 | 2.25 | 2.75 | 3/4 | 0.38 |
| | 1-3/16 | 2.9 | | | | | | | | |
| | 1-1/4 | 2.8 | | | | | | | | |
| | *30mm* | *1.33* | | *38.6* | *111.3* | *13.49* | *57.2* | *69.9* | *19.1* | *9.7* |
| 207 | 1-1/4 | 3.8 | WS308 | 1.71 | 4.87 | 0.531 | 2.50 | 3.06 | 3/4 | 0.50 |
| | 1-3/8 | 3.6 | | | | | | | | |
| | 1-7/16 | 3.5 | | | | | | | | |
| | *35mm* | *1.65* | | *43.4* | *123.7* | *13.49* | *63.5* | *77.7* | *19.1* | *12.7* |

| Series | Shaft Size | H | J | K | L | M | N | R | S | T |
|---|---|---|---|---|---|---|---|---|---|---|
| 204 | 3/4 | 0.63 | 2.00 | 1.25 | 1.12 | 2.985/3.015 | 3.63 | 0.50 | 0.73 | 1.38 |
| | *20mm* | *16.0* | *50.8* | *31.8* | *28.4* | *75.82/76.58* | *92.2* | *12.7* | *18.5* | *35.1* |
| 205 | 7/8 | 0.63 | 2.00 | 1.31 | 1.32 | 2.985/3.015 | 3.63 | 0.56 | 0.78 | 1.38 |
| | 15/16 | | | | | | | | | |
| | 1 | | | | | | | | | |
| | *25mm* | *16.0* | *50.8* | *33.3* | *33.5* | *75.82/76.58* | *92.2* | *14.2* | *19.8* | *35.1* |
| 206 | 1-1/8 | 0.63 | 2.19 | 1.44 | 1.57 | 3.480/3.510 | 4.13 | 0.58 | 0.94 | 1.63 |
| | 1-3/16 | | | | | | | | | |
| | 1-1/4 | | | | | | | | | |
| | *30mm* | *16.0* | *55.6* | *36.6* | *39.9* | *88.39/89.15* | *104.9* | *14.7* | *23.9* | *41.3* |
| 207 | 1-1/4 | 0.63 | 2.50 | 1.44 | 1.84 | 3.480/3.510 | 4.13 | 0.67 | 1.04 | 1.63 |
| | 1-3/8 | | | | | | | | | |
| | 1-7/16 | | | | | | | | | |
| | *35mm* | *16.0* | *63.5* | *36.6* | *46.7* | *88.39/89.15* | *104.9* | *17.0* | *26.4* | *41.3* |


| FEATURES/BENEFITS PAGE B8-2 | HOW TO ORDER/NOMENCLATURE PAGE B4-5 | EASY SELECTION PAGE B8-3 | ACCESSORIES PAGE B8-26 |
|---|---|---|---|