# SELECTION/DIMENSIONS

## DOUBLE-INTERLOCK - Metric

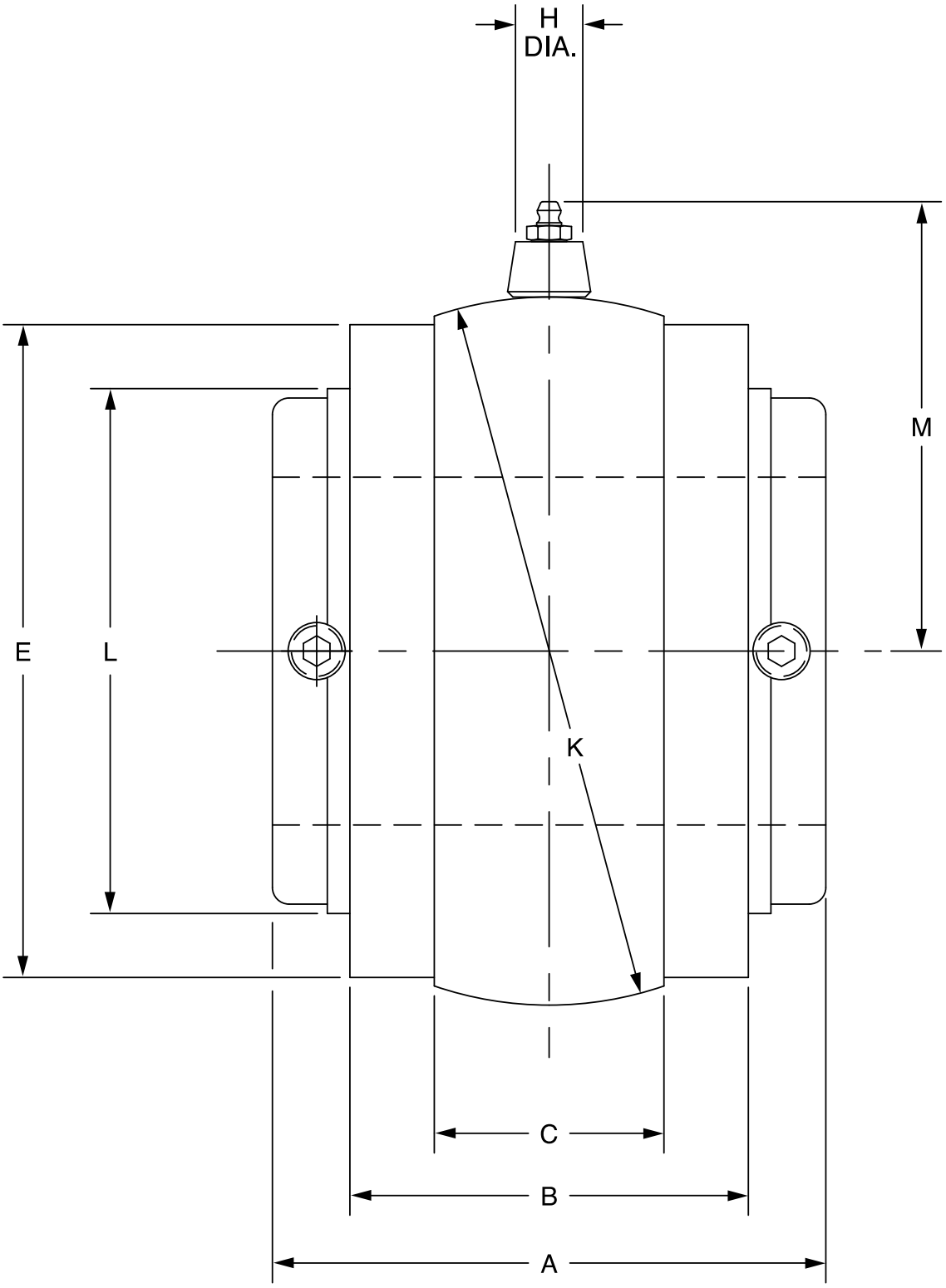



## DOUBLE-INTERLOCK - Metric

| Metric Double Interlock "S-1" Units - Fray Iron | | | |
|---|---|---|---|
| **Shaft Size #** | **Part Number** | **Part Name** | **Weight Lbs (Approx)** |
| 35mm | **023700** | S1U-DI-035M | 5 |
| 40mm | **023701** | S1U-DI-040M | 6 |
| 45mm | **023702** | S1U-DI-045M | 8 |
| 50mm | **023703** | S1U-DI-050M | 8 |
| 55mm | **023704** | S1U-DI-055M | 10 |
| 60mm | **023705** | S1U-DI-060M | 11 |
| 65mm | **023706** | S1U-DI-065M | 10 |
| 70mm | **023707** | S1U-D9-070M | 17 |
| 75mm | **023708** | S1U-DI-075M | 17 |
| 80mm | **023709** | S1U-DI-080M | 33 |
| 85mm | **023710** | S1U-DI-085M | 32 |
| 90mm | **023711** | S1U-DI-090M | 31 |
| 100mm | **023712** | S1U-DI-100M | 42 |
| 110mm | **023713** | S1U-D1-110M | 55 |
| 115mm | **023714** | S1U-DI-115M | 71 |
| 125mm | **023715** | S1U-DI-125M | 85 |

**For housing references see the following pages: Pillow Blocks (B10-22 - B10-25) Flange Bearings (B10-26 - B10-29)**

| **Shaft Size (mm)** | **A** | **B** | **C** | **E** | | **H Dia** | **K** | **L** | **M** |
|---|---|---|---|---|---|---|---|---|---|
| | | | | **Mach Size** | **Cast Size** | | | | |
| 35mm | 3.00 | 2.063 | 1.156 | 3.250 | 3-5/16 | 0.688 | 3.625 ✳ | 2.750 | 2.640 |
| 40mm | 3.375 | 2.313 | 1.188 | 3.750 | 3-13/16 | 0.688 | 4.125 ✳ | 3.188 | 2.890 |
| 45mm<br>50mm | 3.500 | 2.875 | 1.500 | 4.125 | 4-3/16 | 0.688 | 4.562 ✳ | 3.438 | 3.100 |
| 55mm | 3.750 | 2.563 | 1.563 | 4.500 | 4-5/8 | 0.688 | 5.000 ✳ | 3.750 | 3.320 |
| 60mm<br>65mm | 4.000 | 2.750 | 1.438 | 4.812 | 4-7/8 | 0.688 | 5.186 ✳ | 4.063 | 3.410 |
| 70mm<br>75mm | 4.500 | 3.000 | 1.875 | 5.563 | 5-5/8 | 0.688 | 6.061 ✳ | 4.719 | 3.850 |
| 80mm<br>85mm<br>90mm | 5.000 | 3.500 | 2.00 | 6.813 | 6-7/8 | 0.688 | 7.373# | 5.531 | 4.510 |
| 100mm | 6.250 | 4.500 | 2.375 | 7.438 | 7-1/2 | 0.313 | 7.997# | 6.125 | 5.160 |
| 110mm<br>115mm | 6.750 | 4.625 | 2.375 | 8.313 | 8-3/8 | 0.313 | 8.872# | 6.438 | 5.600 |
| 125mm | 7.250 | 5.125 | 2.875 | 9.563 | 9-5/8 | 0.313 | 10.184# | 7.438 | 6.260 |

All Dimensions Are Shown In Inches

✳ +.000 to -.001"
# +/-.0005"