SELECTION/DIMENSIONS



SLEEVOIL - R Series

9", 10", 12" & 14" PLAIN SLEEVOIL PILLOW BLOCKS

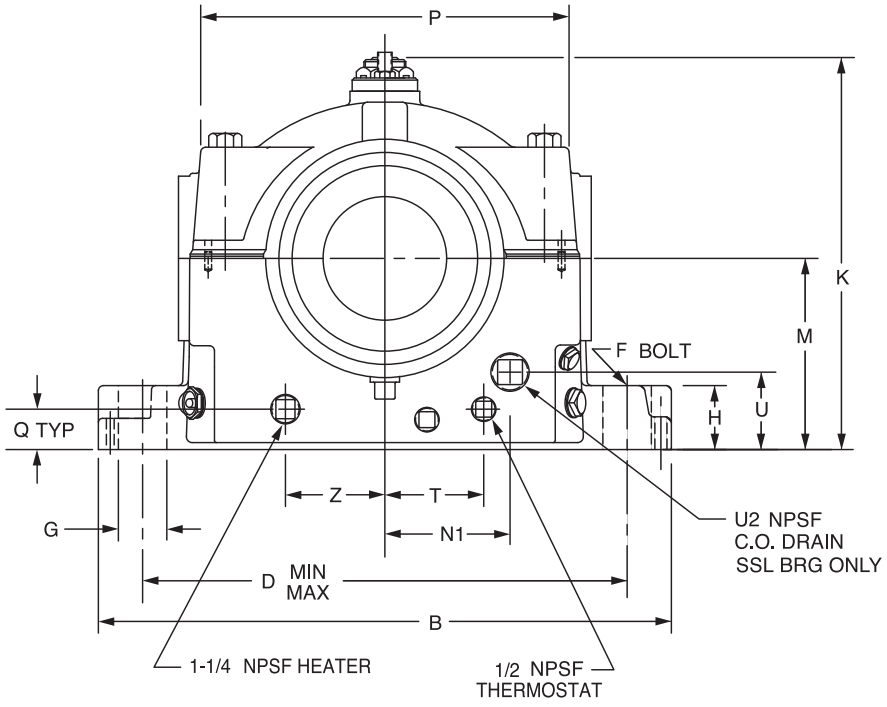

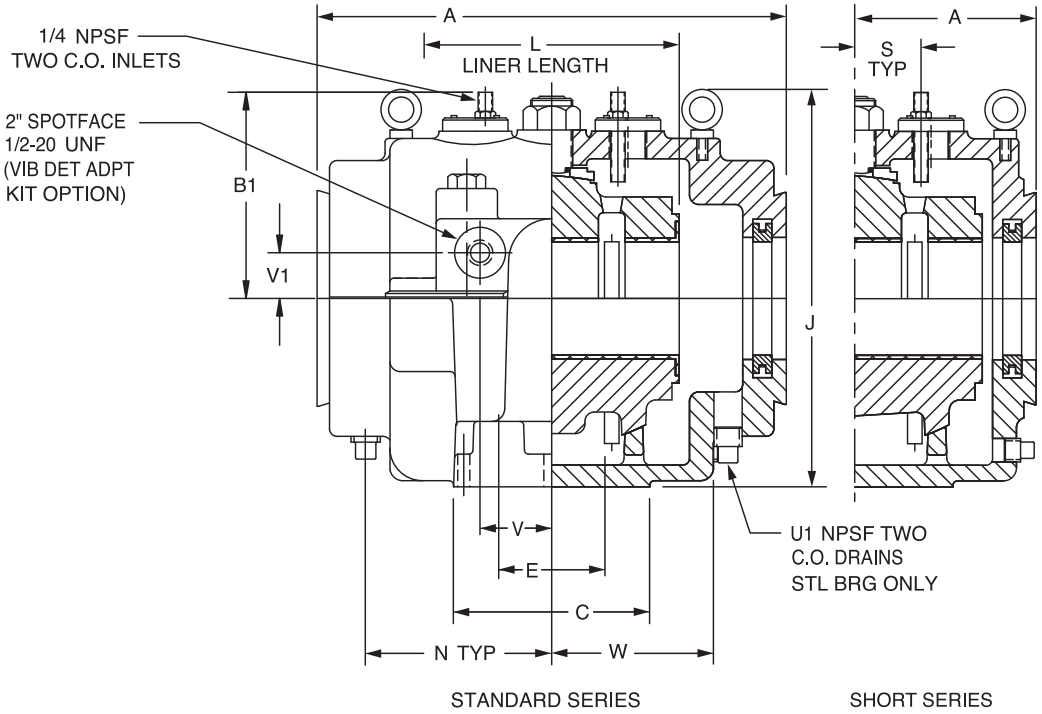

FEATURES/BENEFITS PAGE B18-3	HOW TO ORDER/NOMENCLATURE PAGE B18-7	SELECTION PAGE B18-8	ACCESSORIES PAGE B18-22



SELECTION/DIMENSIONS

SLEEVOIL - R Series

9", 10", 12" & 14" PLAIN SLEEVOIL PILLOW BLOCKS

Shaft Size	Plain Expansion Pillow Blocks				Split Thrust Collars	
	STL		SSL (Short Series Expansion Only)		2 Collars Required To Make A Non-Expansion STL Pillow Blocks	
	Part No.	Wt.	Part No.	Wt.	Part No.	Wt.
9	**132766**	1235	**132924**	1168	**133959**	54
10	**132767**	1240	**132925**	1105	**133960**	52
12	**132768**	2000	**132926**	1785	**133961**	68
14	**431399**	3400	**430561**	3000	**431389**	75

Shaft Size	Auxiliary Seal Kits ##		Housing End Cap Kits		Heater / Thermostat * 120 Volt		Circulating Oil Inlet Kits >		Neoprene End Closure##		Replacement Plain Liner Assemblies	
	Part No.	Wt.	Part No.	Wt.	Part No.	Wt.	Part No.	Wt.	Part No.	Wt.	Part No.	Wt.
9	**132814**	23.1	**132564**	15.9	**434727**	3.0	**430155**	2.0	**133996**	1.5	**133550**	327
10	**132816**	24.2	**132565**	16.4	**434727**	3.0	**430155**	2.0	**133995**	1.6	**133669**	450
12	**132819**	40.0	**132566**	25.0	**434729**	4.0	**430155**	2.0	**133997**	1.9	**133392**	650
14	**132822**	36.0	**132567**	25.0	**434729**	4.0	**430155**	2.0	**....**	....	**430831**	1200

Shaft Size	A		B	C	D (Min.-Max.)	E	F-Bolt	G	H		J	
	STL	SSL	STL & SSL	STL & SSL	STL &SSL	STL & SSL	STL & SSL	STL & SSL	STL	SSL	STL	SSL
9	27-3/4	21	34	14-1/2	25-5/8 - 28-7/8	7-1/2	1-3/4	3-1/2	5-7/8	4	22-3/8	23-1/2
10	27-3/4	21	34	14-1/2	25-5/8 - 28-7/8	7-1/2	1-3/4	3-1/2	5-7/8	4	22-3/8	23-1/2
12	30	23-1/4	40	17	31-1/4 - 34-3/4	9	2	4	6-3/4	6-3/4	29-5/16	29-5/16
14	34	26-1/4	46-1/8	18	36-1/2 - 40-1/2	10	2	4	7	...	35-1/8	35-1/8

Shaft Size	K	L	M	N	N1	P	S	T		U	U1	U2	V	Wt. (lbs.)	
	STL & SSL	STL & SSL	STL & SSL	STL	SSL	STL & SSL	STL & SSL	STL	SSL	SSL	STL		STL & SSL	STL	SSL
9	22-1/2	16	10-3/4	11	5-1/2	19	3	5-1/4	4	3-3/8	1-1/4	1-1/4	5	1235	1168
10	22-1/2	16	10-3/4	11	5-1/2	19	3	5-1/4	4	3-7/8	1-1/4	1-1/4	5	1240	1105
12	28-1/4	18	13-1/2	12-3/8	7-3/4	23-3/4	3-1/2	7	7	5-3/16	1-1/2	1-1/2	7	2000	1785
14	32-5/8	20	16	....	....	28-3/4	....	....	....	....	....	1-1/2	....	....	....

Shaft Size	V1		W	Z	B1
	STL	SSL	STL & SSL	STL & SSL	STL
9	1-1/2	1-1/2	9-5/8	5-1/4	12
10	1-1/2	1-1/2	9-5/8	5-1/4	12
12	2	2	11	7	14-1/2.
14	....	....	12-1/16	....	....

One required per pillow block end

> One required per pillow block

* 220 volt heaters available. See page B18-26.

All housings are pre-machined for accessories; thermocouples, circulating oil vibration detector, heater and thermostat