SELECTION/DIMENSIONS

Type E-Xtra Wide Slot Take-Up Unit

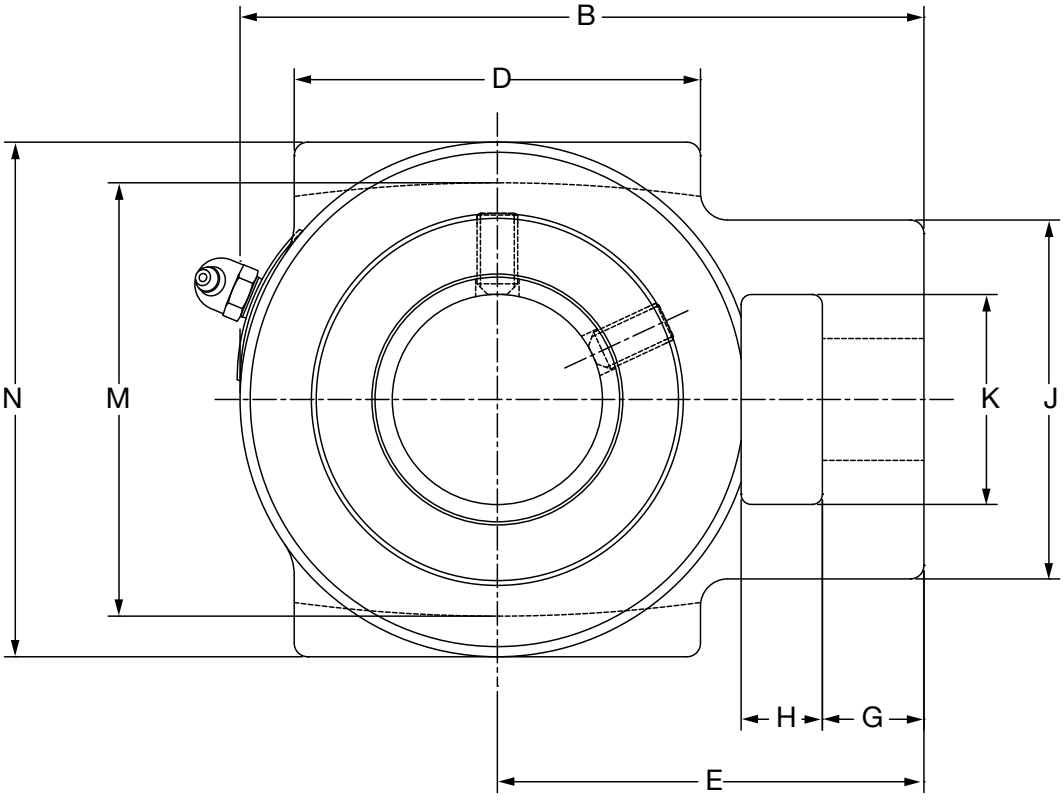

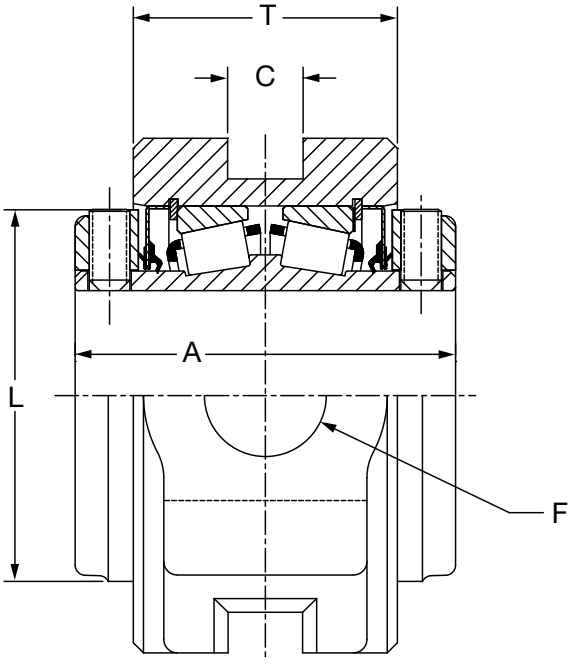

1-3/8” THRU 3” CONSTRUCTION

FEATURES/BENEFITS PAGE B10-2	HOW TO ORDER/NOMENCLATURE PAGE B10-9	EASY SELECTION PAGE B10-15	ACCESSORIES PAGE B10-64



Type E-Xtra Wide Slot Take-Up Unit

Gray Iron				
Shaft Size # Inches	**Part Number**	**Part Name**	**Weight Lbs (Approx)**	**Frame Δ**
1-3/8	**023076**	WSTU-E-106R	8	CP308
1-7/16	**023077**	WSTU-E-107R	8	
1-1/2	**023078**	WSTU-E-108R	10	CP400
1-5/8	**023079**	WSTU-E-110R	10	
1-11/16	**023080**	WSTU-E-111R	10	
1-3/4	**023081**	WSTU-E-112R	12	CP400
1-7/8	**023082**	WSTU-E-114R	12	
1-15/16	**023083**	WSTU-E-115R	12	
2	**023084**	WSTU-E-200R	12	
2-3/16	**023085**	WSTU-E-203R	16	CP408
2-1/4	**023086**	WSTU-E-204R	21	CP502
2-7/16	**023087**	WSTU-E-207R	21	
2-1/2	**023088**	WSTU-E-208R	21	
2-11/16	**023089**	WSTU-E-211R	30	CP515
2-3/4	**023090**	WSTU-E-212R	30	
2-15/16	**023091**	WSTU-E-215R	30	
3	**023092**	WSTU-E-300R	30	

Consult DODGE For Sizes Not Listed.

Δ See page B15-20 for CP Take-Up Frame

Shaft Size Inches	**A**	**B**	**C**	**D**	**E**	**F Screw Dia**	**G**	**H**	**J**	**K**	**L**	**M**	**N**	**T**
1-3/8 1-7/16	3.00	5.09	0.53	2.75	3.22	3/4	0.69	0.63	2.44	1.44	2.75	3.50	4.13	2.06
1-1/2 1-5/8 1-11/16	3.38	6.00	0.69	3.25	3.81	1	0.94	0.75	3.31	1.94	3.79	4.00	4.75	2.31
1-3/4 1-7/8 1-15/16 2	3.50	6.31	0.69	3.75	3.94	1	0.94	0.75	3.31	1.94	3.44	4.00	4.75	2.44
2-3/16	3.75	7.13	0.81	3.75	4.63	1-1/8	1.00	1.25	3.88	2.25	3.75	4.50	5.25	2.56
2-1/4 2-7/16 2-1/2	4.00	7.81	1.06	4.50	5.06	1-1/4	1.06	1.25	4.25	2.50	4.06	5.13	6.00	2.75
2-11/16 2-3/4 2-15/16 3	4.50	9.13	1.81	4.75	5.88	1-1/2	1.13	1.50	4.88	2.75	4.72	5.94	6.75	3.00

NOTE: All sizes use a 1/8-27 NPT hydraulic grease fitting

FEATURES/BENEFITS PAGE B10-2	HOW TO ORDER/NOMENCLATURE PAGE B10-9	EASY SELECTION PAGE B10-15	ACCESSORIES PAGE B10-64