SELECTION/DIMENSIONS

TAF Units - Inch

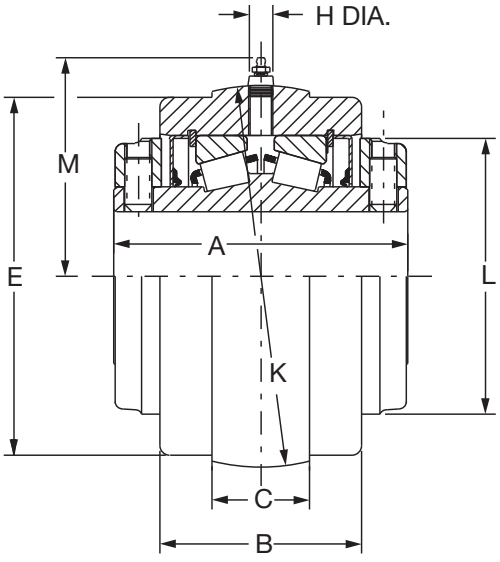

S-1 UNIT
1-7/16" THRU 3" CONSTRUCTION

NOTE: All sizes use a 1/8 - 27 NPT hydraulic grease fitting

TAF S1 Unit Is Used In All Expansion And Non-Expansion TAF Housings

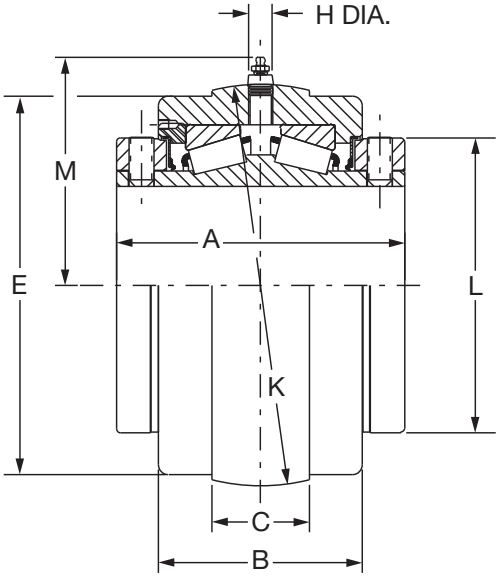

S-1 UNIT
3-3/16" THRU 5" CONSTRUCTION

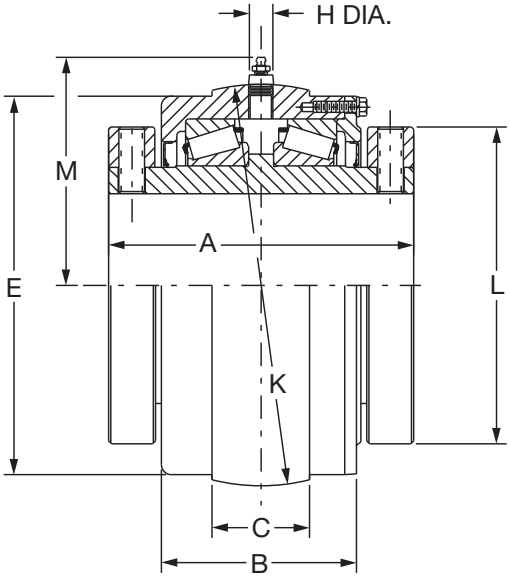

S-1 UNIT
5-7/16" THRU 7" CONSTRUCTION



TAF Units - Inch

"S-1" Units - Gray Iron			
Shaft Size # Inches	**Part Number**	**Part Name**	**Weight Lbs (Approx)**
1-7/16	**037632**	S1U509-TAF-107	5
1-11/16	**037633**	S1U510-TAF-111	7
1-15/16	**037634**	S1U511-TAF-115	8
2-3/16	**037635**	S1U513-TAF-203	9
2-7/16	**037636**	S1U515-TAF-207	11
2- 1/2	**037637**	S1U515-TAF-208	11
2-11/16	**037638**	S1U516-TAF-211	18
2-3/4	**037639**	S1U516-TAF-212	17
2-15/16	**037640**	S1U517-TAF-215	17
3	**037641**	S1U517-TAF-300	17
3-7/16	**037642**	S1U520-TAF-307	31
3-1/2	**037643**	S1U520-TAF-307	31
3-15/16	**037644**	S1U522-TAF-315	43
4	**037645**	S1U522-TAF-400	43
4-7/16	**037646**	S1U526-TAF-407	57
4-1/2	**037647**	S1U526-TAF-408	68
4-15/16	**037648**	S1U528-TAF-415	82
5	**037649**	S1U528-TAF-500	82
5-7/16	**023610**	S1U-TAF-507R	155
5-15/16	**023611**	S1U-TAF-515R	143
6	**023612**	S1U-TAF-600R	138
6-7/16	**023613**	S1U-TAF-607R	187
6-1/2	**023614**	S1U-TAF-608R	182
6-15/16	**023615**	S1U-TAF-615R	180
7	**023616**	S1U-TAF-700R	178

NOTE: TAF inserts below 5-7/16" are not interchangeable with TAF-XT housings, with shafts of 5" or less, order DOUBLE-INTERLOCK S-1 units on Page B10-50

Shaft Size Inches	**A**	**B**	**C**	**E**		**H**	**K**	**L**	**M**
				Mach. Side	**Cast Side**				
1-7/16	3.00	2.06	1.16	3.25	3.31	0.75	3.595 •	2.75	2.50
1-11/16	3.38	2.31	1.19	3.75	3.81	0.75	4.095 •	3.19	2.88
1-15/16	3.50	2.44	1.50	4.13	4.18	0.75	4.502 •	3.44	2.75
2-3/16	3.75	2.56	1.56	4.50	4.56	0.75	4.940 •	3.75	2.95
2-7/16 2- 1/2	4.00	2.75	1.44	4.81	4.87	0.75	5.156 •	4.06	3.38
2-11/16 2-3/4	4.50	3.00	1.88	5.56	5.63	0.75	6.001	4.72	3.88
2-15/16 3	4.50	3.00	1.88	5.56	5.63	0.75	6.001 •	4.72	3.88
3-7/16 3-1/2	5.00	3.50	2.19	6.81	6.88	0.75	7.313 ✳	5.50	4.50
3-15/16 4	6.25	4.50	2.59	7.44	7.40	0.94	7.937 ✳	6.00	5.13
4-7/16 4-1/2	6.75	4.63	2.56	8.31	8.32	0.94	8.812 ✳	6.45	5.50
4-15/16 5	7.25	5.13	3.13	9.56	9.54	0.94	10.124 ✳	7.45	6.19
5-7/16 5-15/16 6	9.00	5.88	2.56	11.19	11.19	0.94	11.563 ^	9.38	6.91
6-7/16 6-1/2 6-15/16 7	10.50	7.13	3.00	13.25	13.25	0.94	13.748 ^	11.38	8.00

• +.000,-.001" ^.000,-.003" ✳ +.0005

Consult DODGE For Sizes Not Listed

FEATURES/BENEFITS PAGE B10-2	HOW TO ORDER/NOMENCLATURE PAGE B10-9	EASY SELECTION PAGE B10-15	ACCESSORIES PAGE B10-64